INSTRUCTION MANUAL

Before connecting, operating or adjusting the unit,
please read instructions carefully and completely.

BLUETOOTH NAME “Daakro”

Audio amplifier

MODEL:AV-735A

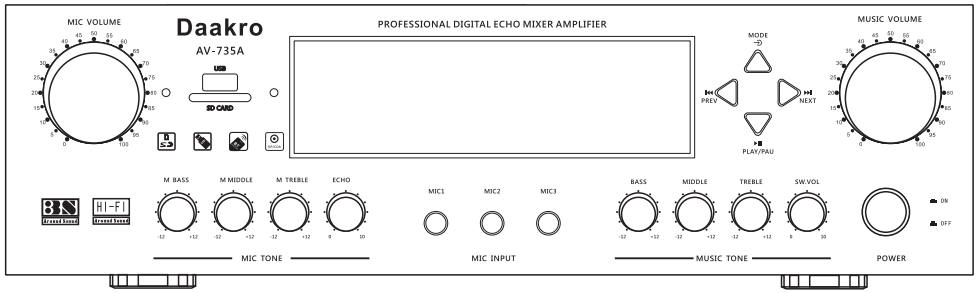

INSTRUCTION MANUAL

Before connecting, operating or adjusting the unit,
please read instructions carefully and completely.

FRONT PANEL FUNCTION BRIEF

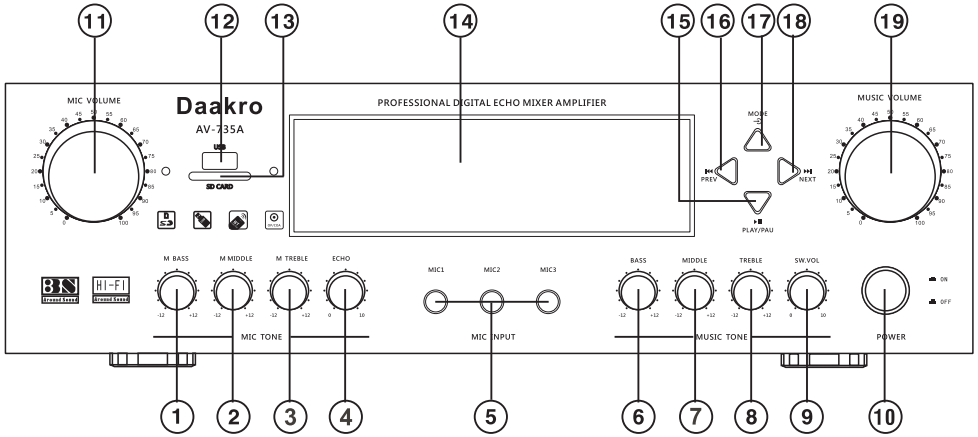

1.Mic bass - To adjust the low frequency sound level of the microphones.

2.Mic middle - To adjust the middle frequency sound level of the microphones.

3.Mic treble - To adjust the high frequency sound level of the microphones.

4.Mic echo-To adjust the echo level or the reverbeation effect of the microphones

5.MIC input - To connect the microphones into the microphone input jacks(6.35mm) of the product.

6.Music bass - To adjust the low frequency sound level of the selected source audio.

7.Music middle - To adjust the middle frequency sound level of the selected source audio.

8.Music treble - To adjust the high frequency sound level of the selected source audio.

9. Super bass volume- To adjust the Super bass sound output level of the selected source audio.

10.Power switch-to switch the power of the product ON or OFF.

11. Mic volume- To adjust the sound output level of the connected to the microphones input jacks.

12. USB input - To insert your USB flash drive with Mp3 audio files into its input port.

13. SD input - To insert your SD flash drive with Mp3 audio files into its input port.

14. Oled display-To display information during operation.

15.Play/pause button-To pause or to resume Mp3 audio playback during USB/SD operation.

16.Previous button-To select the previous file or track number during USB/SD MP3 audio playback.

17.Mode-To select the desired audio input source

18.Next button-To select the next file or track number during USB/SD MP3 audio playback.

19. Music volume- To adjust the sound output level of the selected source audio.

REAR PANEL FUNCTION INTRODUCTION

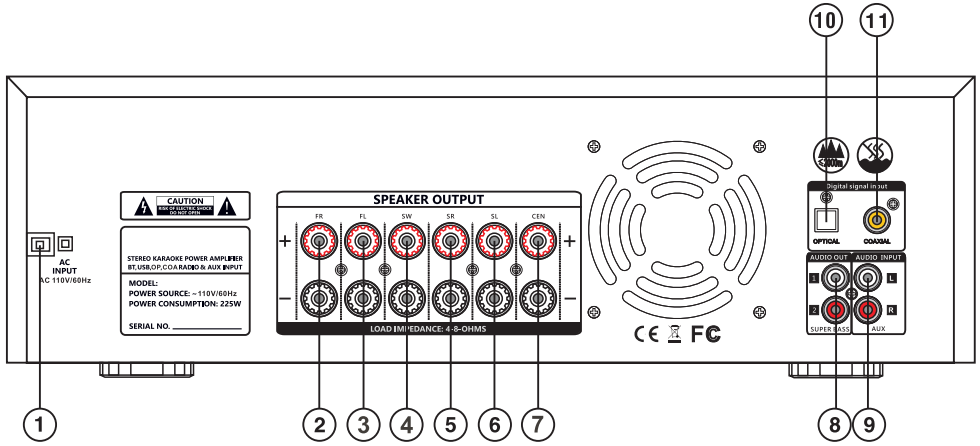

1. Ac power cord-To connect the product to the main power source outlet.
   Make sure the power switch is set to “OFF” position before connecting the AC plug to the power outlet.

2.Impedance speaker output terminals-To connect the right impedance speaker system.
   Connect the positive lead of the speaker wire(red)to the positive terminal (+) and the negative lead of the speaker wire(black) to the negative (-) terminal.

3.Impedance speaker output terminals-To connect the left impedance speaker system.
   Connect the positive lead of the speaker wire(red)to the positive terminal (+) and the negative lead of the speaker wire(black) to the negative (-) terminal.

4.Impedance speaker output terminals-To connect the super bass impedance speaker system.
   Connect the positive lead of the speaker wire(red)to the positive terminal (+) and the negative lead of the speaker wire(black) to the negative (-) terminal.

5.Impedance speaker output terminals-To connect the surround right impedance speaker system.
   Connect the positive lead of the speaker wire(red)to the positive terminal (+) and the negative lead of the speaker wire(black) to the negative (-) terminal.

6.Impedance speaker output terminals-To connect the surround left impedance speaker system.
   Connect the positive lead of the speaker wire(red)to the positive terminal (+) and the negative lead of the speaker wire(black) to the negative (-) terminal.

7.Impedance speaker output terminals-To connect the center impedance speaker system.
   Connect the positive lead of the speaker wire(red)to the positive terminal (+) and the negative lead of the speaker wire(black) to the negative (-) terminal.

8. Super bass output jacks-To connect the product to your active subwoofer system

9. AUX INPUT Jacks-To connect the left and right audio output channels of your external audio/video player or any

10. Optical fiber Jacks-To connect the optical fiber output channels of your external optical fiber/video player or any

11. Coaxial Jacks-To connect the coaxial output channels of your external coaxial/video player or any

REMOTE CONTROL FUNCTION DESCRIPTION

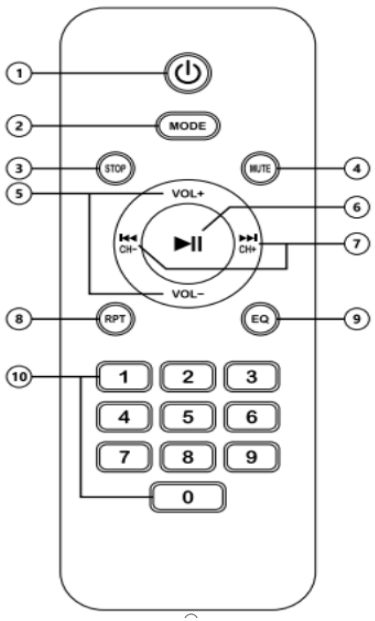

①Standby button: The AV-735A amplifier enters sleep mode, but the knob/screen light will not go out, reminding you that it is in standby mode .

②MODE: AUX/ Bluetooth /OPT/COAX cyclic switching.

③STOP: Reset the song to restore the current song progress to the original state, then press the play button to start playing the song from the beginning(Note: This function is only available in Bluetooth mode and USB mode).

④MUTE: put the device into silent mode .

⑤VOL+/VOL-: Volume up/down .

⑥ ▶II : Pause/play loop switch

⑦CH+/CH-: Previous song/Next song .

⑧RPT: Repeat the current song (Note: This function is only available in USB mode) .

⑨EQ: Built-in 5 kinds of tones and original sound, you can choose your favorite tone.

⑩0-9 number keys: select the song to be played (Note: only supports playing songs in the USB flash drive) (If you need to switch to songs after 10+, for example, the 12th song, press "1" first, then quickly press "2").

HOW TO WIRE：

由 Foxit PDF Editor 编辑
版权所有 (c) by Foxit 公司, 2003 - 2010
仅用于评估。

Wiring method 1:

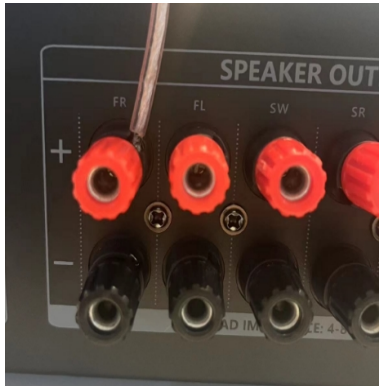

1、Use wires of the correct specifications to connect the speakers, strip off about 10mm of insulation at both ends, and tighten the wire core if the bare wire is loose;

2. When connecting the speaker wire post, unscrew the knob, insert the bare wire, and tighten the knob.

Notice:

Red terminal to the red port of the speaker (+ positive)

Black terminal to the black connector of the speaker (- negative)

Wiring method 2:

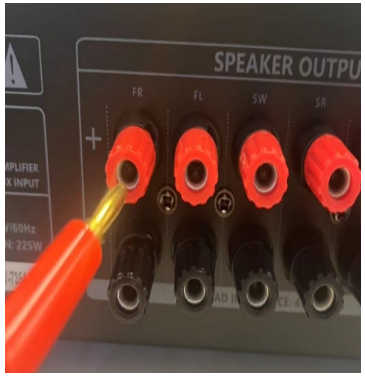

The speaker terminals of this unit can also be connected using banana plugs, the procedures are as follows:

1、First tighten the binding post knobs;

2. Then insert the banana plug into the corresponding jack.

Notice:

Red terminal to the red port of the speaker (+ positive)

Black terminal to the black connector of the speaker (- negative)

HOW TO USE:

1.How to use the wired connection:

①Connect AV-735A to the computer/TV via the RCA interface, COA coaxial interface or Optical fiber interface.

②Use the signal cable to connect the audio output interface and the passive speaker of this product, and ensure that the left/right channels and the positive and negative poles are connected correctly (refer to wiring method 1/method 2)

③Click the MODE button to switch to the correct signal (AUX/BT/OPT/COAX)

2. Wireless Bluetooth connection method (Bluetooth version only)

①Use a signal cable to connect the audio output interface and the passive speaker of this product, and ensure that the left/right channels and the positive and negative poles are connected correctly (refer to wiring method 1/method 2)

②Once click the MODE button to switch to Bluetooth mode, the voice prompt "Bluetooth mode" will be heard. Then turn on the phone and go to Settings - Bluetooth - search for " Daakro" and click Connect. After the connection is completed , the voice prompt "Connected" will be heard.

Step 1: Use banana plugs or bare wires to connect the passive speakers to the AV-735A, and use a signal cable to connect the audio output interface and the passive speakers of this product. Then connect the power plug to the power supply, turn on the power switch, and make sure the screen and LED light up.

Step 2: Adjust the total volume knob to 40%, press the mode button, and the voice prompts the current mode (the default mode is AUX mode at startup). You can switch between four modes: AUX/ Bluetooth /OPT/COAX.

Step 3: Adjust Volume Control/Bass Control/Mid-Pitch Control/Treble Control/Subwoofer Control and enjoy it!

How to use the Microphone ’ s singing function:

1.The AV-735A front panel has 3 microphone input interfaces (1/4 inch microphone interfaces)

2.After inserting the microphone, the microphone volume, bass, mid-range, treble and reverb can all be fine-tuned through MIC VOLUME, M BASS, M MIDDLE, M TREBLE and ECHO.

GENERAL QUESTIONS:

1.Why is there noise when playing music?

①Try to use another Bluetooth device, as weak or unstable Bluetooth signals may be the reason of the noise . Please try to disconnect the device from AV-735A.

②Change an RCA cable and make sure the audio cable is connected correctly.

③Please unplug the RCA cable from the amplifier and turn it on again.

④Please try changing the audio cable and audio source.

⑤Have you turned up the volume of the "treble" to the highest level? Please turn down the volume of the "treble".

⑥You can try to lower the volume of the "treble". Some speakers are very sensitive, so it ’ s normal that the white noise may sound very loud .

⑦Make sure all cables are fully plugged into the device. Incomplete connections may lead to noise .

⑧Please separate this device from other electronic devices.

2. All cables are connected, but there is no audio output?

①Please check whether the indicator light on the front panel of the amplifier is on and whether the power is on.

②If the indicator light is on, please check whether the volume knob is at the minimum state. If so, please turn up the volume.

③Make sure the AV-735A is in the playback mode you want.

④Please check whether the audio source is paused.

⑤Try changing the sound source, cables, speakers, or subwoofer.

⑥Restart the AV-735A and the device, and then try to connect again.

⑦: Make sure all cables are properly connected and fully inserted into the device.

3.Why is the sound quality bad?

①Make sure all cables are connected.

②Adjust the treble and bass controls of the amplifier to achieve the appropriate tone.

③Replace the sound source and cable for testing

4.Why can't my Bluetooth device pair with the AV-735A?

①First make sure that AV-735A is turned on and currently in Bluetooth mode.

②Make sure the AV-735A is not paired with other devices.

③The distance between your device and AV-735A should not be too far. If there is some distance, try shortening the distance between your device and AV-735A.

④Is there any obstacle between the device and AV-735A? Obstacles will affect the working distance of Bluetooth.

⑤Please try to change other Bluetooth audio sources for testing.

⑥Please unplug the power supply, move the amplifier to another room and test it again.

⑦Restart AV-735A and try to connect it again with another brand of mobile phone.

5.Why is Bluetooth intermittent?

①Try to change the Bluetooth device.

② Is there any interference from other electronic devices between the AV-735A and the audio source?

③Try moving the sound source closer to AV-735A.

④Restart the machine.

6.Why does a certain channel not work?

①Please first test whether the Bluetooth and RCA inputs have the same problem.

②If both modes have the same problem, please replace the cables of the left and right speakers, or replace the former one with another speaker, and then test whether this channel still does not work.

③If only AUX or Bluetooth mode does not work, please change the audio source, replace the RCA cable, and test again. Make sure all cables are fully inserted into the device.

7.Why can't I start the machine?

①Please check whether the power plug is loose.

②Try pressing the power button all the way down.

8.Does the AV-735A support Bluetooth apt-X and low latency?

Not supported

GENERAL QUESTIONS:

9.Should I unplug the power cord?

If the item is not used for a long time, please unplug the power plug to prevent the AV-735A from being burned by lightning.

10. Do I have to connect all the outputs of the AV-735A? Can I just connect one speaker? Or just use it as a subwoofer amplifier?

You do not need to connect all the outputs. You can selectively connect the output channels as needed.

11.Can the AV-735A be used as a 2.0 channel power amplifier? Can it be used without connecting a subwoofer?

It can be used as a 2.0 channel amplifier and can be used without connecting a subwoofer.

12.What does the SW VOL knob do? Does it only adjust the subwoofer volume?

The SW VOL knob can only be used to adjust the volume of the passive subwoofer.

13.Which speakers are suitable for AV-735A?

The AV-735A is suitable for both passive speakers and powered subwoofers.

14.Why is the sound intermittent?

①Try to turn down the volume of the sound source.

②Try to change the audio source for testing.

③turn down the volume of treble and bass.

④Make sure the positive and negative poles of the speaker output do not touch each other. Some larger banana plugs can easily touch each other and cause a short circuit.

15.Why is there a howling sound when using the microphone?

① Adjust the position of the microphone and the speaker, and keep a certain distance between them, so as to avoid pointing the microphone directly at the speaker.

②Reduce the gain of the microphone and turn down the volume of the microphone to avoid over-amplification of the sound.

③Use a microphone with low directivity to reduce the capture of unnecessary sounds.

16.Why the screen is blurry, and has bubbles and scratches on it?

There is a protective film on the screen. Remove it before use to get a better experience.

WARNING:

1.Do not use this product near magnets or strong magnetic fields, as this may affect the normal function of the product or even damage it.

2.Do not drop or strongly impact it; rough use may cause damage.

3.This product is an audio transmission device and does not support the transmission of pictures/files.

4.Please avoid using it in extremely high or low temperatures, or in humid or corrosive environments.

5.The device shall not be exposed to water dripping or splashing, and shall not be dropped or thrown into water or fire.

6.If the product is not to be used for a long time, please store it in a dry, dust-free environment with little temperature change.

7.Please supervise children to ensure that they do not use this product as a toy.

This device complies with part 15 of the FCC Rules. Operation is subject to the following two conditions: (1) This device may not cause harmful interference, and (2) this device must accept any interference received, including interference that may cause undesired operation.

Any Changes or modifications not expressly approved by the party responsible for compliance could void the user's authority to operate the equipment.

Note: This equipment has been tested and found to comply with the limits for a Class B digital device, pursuant to part 15 of the FCC Rules. These limits are designed to provide reasonable protection against harmful interference in a residential installation. This equipment generates uses and can radiate radio frequency energy and, if not installed and used in accordance with the instructions, may cause harmful interference to radio communications. However, there is no guarantee that interference will not occur in a particular installation. If this equipment does cause harmful interference to radio or television reception, which can be determined by turning the equipment off and on, the user is encouraged to try to correct the interference by one or more of the following measures:

-Reorient or relocate the receiving antenna.

-Increase the separation between the equipment and receiver.

-Connect the equipment into an outlet on a circuit different from that to which the receiver is connected.

-Consult the dealer or an experienced radio/TV technician for help.

-This equipment complies with FCC radiation exposure limits set forth for an uncontrolled environment. This equipment should be installed and operated with minimum distance 20cm between the radiator & your body.