Egofit M1 / M1T

EGOFIT®

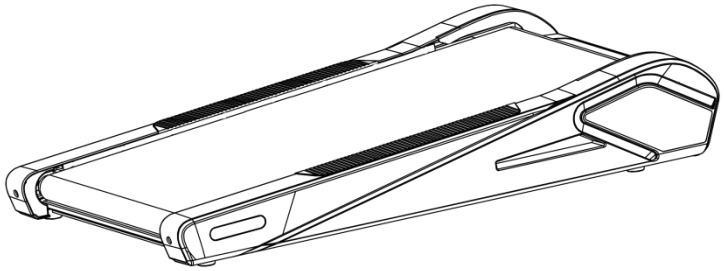

Owners Manual

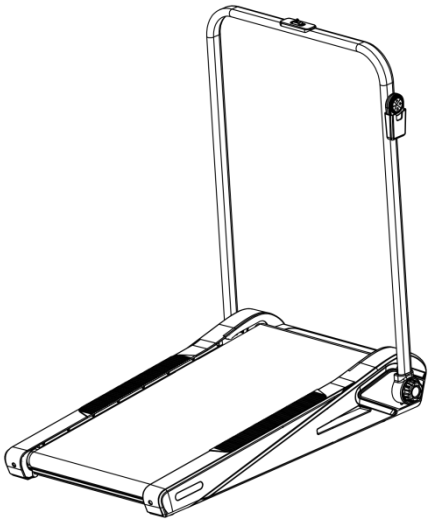

For safe use and product knowledge, please completely read this Product OWNERS MANUAL.

Caution: The user is cautioned that changes or modifications not expressly approved by the party responsible for compliance could void the user's authority to operate the equipment.

This device complies with Part 15 of the FCC Rules. Operation is subject to the following two conditions: (1) this device may not cause harmful interference, and (2) this device must accept any interference received, including interference that may cause undesired operation.

NOTE: This equipment has been tested and found to comply with the limits for a Class B digital device, pursuant to Part 15 of the FCC Rules. These limits are designed to provide reasonable protection against harmful interference in a residential installation. This equipment generates, uses and can radiate radio frequency energy and, if not installed and used in accordance with the instructions, may cause harmful interference to radio communications. However, there is no guarantee that interference will not occur in a particular installation. If this equipment does cause harmful interference to radio or television reception , which can be determined by turning the equipment off and on, the user is encouraged to try to correct the interference by one or more of the following measures:

-- Reorient or relocate the receiving antenna.
-- Increase the separation between the equipment and receiver.
-- Connect the equipment into an outlet on a circuit different from that to which the receiver is connected.
-- Consult the dealer or an experienced radio/TV technician for help.

FCC Radiation Exposure Statement

This equipment complies with FCC radiation exposure limits set forth for an uncontrolled environment.
This transmitter must not be co-located or operating in conjunction with any other antenna or transmitter.

E: info@egofitwalker.com
www.egofitwalker.com

V.1.0

Welcome to Egofit,

Congratulations in taking a step forward to increase your level of physical activity or add variety to your current exercise program. Physical activity is now more than ever a necessity to keep your body healthy and fit. Whether your motivation is to Lose Weight, manage a Chronic Disease like diabetes, train for a sporting event or just live a Healthy Lifestyle, Egofit products can help you achieve your health and fitness goals.

We invite you to the Egofit website at www.egofitwalker.com where we include additional information and tools to help you maintain your exercise program and achieve your health and fitness goals.

The Egofit Home series of cardio equipment is designed for more than 60% consumers who say they prefer to exercise in the comfort and privacy of their own homes. Each Home series product is designed and manufactured to exceed your expectations for quality and durability, simple assembly and ease of operation.

Please read this manual thoroughly before assembly and operation of your new Egofit equipment. It includes information on proper operation, safety precautions, product assembly and ongoing maintenance.

Remember that some types of services should only be performed by a qualified service technician. In the instance that service is required, please contact your authorized Egofit retailer or log on to our website and select the Customer Support option. Complete the information requested and we will respond to your inquiry within 1 business day.

Neither Egofit nor its representatives can accept responsibility for any damages or injury incurred as a result of information presented in this manual except under the terms of the product warranty.

Note: Please ensure that all the persons using the device have read and understood the user manual and save for future use.

Table of Content

Welcome	3
Specification	5
Limited home use warranty	6
Important safety precautions	7-8
Accessories list	9
Buttons on Remote Control	10
Remote control match instructions	11
Starting an Exercise program	12
Assembly Steps	13-14
Operate Desktop console	15
Console power buttons	16
Starting the treadmill from Desktop console	17
Belt lubrication and Belt tensioning	18
Belt Alignment	19
Troubleshooting	20
FAQs	21-22

Note:

Warranty Registration:
You must register your Egofit product before a warranty claim can be processed, To complete your registration online go to www.egofitwalker.com and click on the foot menu Warranty Registration, fill out the warranty registration form and submit, Registration form must be received by Egofit within 30days of purchase to activate the Product Warranty. Product Warranties are not valid unless the registration is properly completed and received within 30 days.

Specifications

	M1	M1T
Display Readouts	Workout Time, Calories, Distance, Speed, Steps	Workout Time, Calories, Distance, Speed, Steps
Speed range	1~5.0 kmh/0.62~3.1mph	1~6.0 kmh/0.62~3.73mph
Inlcine levels	5%	5%
Running belt Size	870*420mm / 34.25 *16.54 inch	870*420mm / 34.25 *16.54 inch
Drive Motor	2.0 HP (peak)	2.0 HP (peak)
Maximum User weight	100kgs / 222lbs	100kgs / 222lbs
Residential Warranty	1 year	1 year

Limited Home Use Warranty

The Egofit M1 and M1T Treadmills come with the 1 year limited warranty, which applies only for the use of the Treadmill in the home, for residential, non-commercial purposes.

Egofit warrants that the equipment it manufactures is free from defects in material workmanship under normal use and service. The periods above are based on the date of purchase. During these periods, Egofit will repair or replace any defective part, Free labor is included for the first year on all parts that are not normally assembled or replaced by the customer customer may be responsible to pay for Service Technician travel time where travel in excess of 20 miles is required

if within the time frames specified above, any part fails to operate properly, log on to our web site at www.egofitwalker.com, complete the form to request assistance.

Egofit reserves the right to make changes and improvements to our products without incurring any obligations to similarly alter any product purchased. In order to insure our product warranty and to ensure the safe and efficient operation of your Egofit product, only authorized parts can be used The warranty is void if any parts other than those provided by Egofit are used.

Exclusions and Limitations:

•· This warranty does not apply to any defects caused by negligence, misuse, improper assembly or maintenance, accident, or an "act of god”.
•· This warranty does not apply to discoloration of paint or plastics.
•· Egofit shall not be responsible for incidental or consequential damages.
•· This warranty is nontransferable from the original owner.
•· Labor warranty does not cover replacement of Customer Assembled Parts.

Warranty Registration:

You must register your Egofit product before a warranty claim can be processed, To complete your registration online go to www.egofitwalker.com and click on the foot menu Warranty Registration, fill out the warranty registration form and submit, Registration form must be received by Egofit within 30days of purchase to activate the Product Warranty. Product Warranties are not valid unless the registration is properly completed and received within 30 days.

Important Safety Precautions

When using exercise equipment, basic precautions should always be followed, including.

• Never drop or insert any object into any opening.

• Never operate this treadmill if it has been damaged or even partially submersed in water.

• To reduce the risk of electric shock, unplug the treadmill from the wall outlet when not in use. before performing any maintenance, or before moving the treadmill.

• Do not use outdoors.

• Do not lean against or climb on the treadmill. Doing so may result in the treadmill tipping and falling and could result in serious personal injury.

• Do not hang or place items on the treadmill. Doing so could result in shifting the weight balance of the treadmill causing it to tip over or fall causing serious personal injury.

• Do not operate with the side rails removed.

• Keep the treadmill on a solid surface, with the side rails and front a minimum of two feet from any walls or furniture. Make sure that the area behind the treadmill remains completely clear during use. A minimum of 4 feet of clearance is required for safety reasons.

• Do not operate where aerosol spray products are being used or where oxygen is being administered.

• Never place the power cord under carpeting or place any object on top of the cord, this may pinch or damage the cord causing fire damage or personal injury.

• Use this exercise product for its intended use as described in this Owner's Manual. Do not use attachments that are not recommended by Egofit.

• Do not leave your treadmill running while not in use.

Children and Pets.

• Keep children off your treadmill at all times.

• When in use children and pets should be kept at least 10 feet away.

Grounding Instructions

• Never use extension cords between the treadmill and the wall outlet

• This product is for use on a nominal 120 volt (non GFI) circuit, and has a grounding plug similar to the illustration below. Never remove or otherwise bypass the electrical ground terminal.

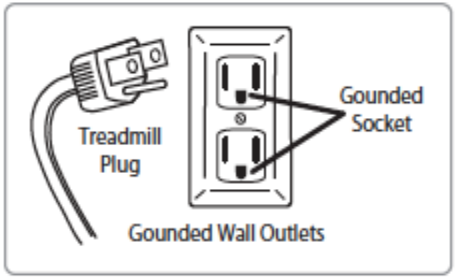

Danger: Improper connection of the equipment grounding conductor can result in the risk of electric shock Check with a qualified electrician or service person if you are in doubt as to whether the product is properly grounded. Do not modify the plug provided with the product. If it will not fit in the outlet, have the proper outlet installed by a qualified electrician.

Other Safety Tips

• Always consult a physician before beginning this or any exercise program.

• If you experience chest pains, nausea, dizziness or shortness of breath, stop exercising immediately and consult your physician before continuing.

• Do not wear clothing or jewelry that might catch on any part of the treadmill.

• This treadmill is equipped with a safety key. If the key is removed from the display, the treadmill will immediately stop. Always clip the cord that is attached to the safety key to a part of your clothing so the key will be pulled from the display, stopping the treadmill, in case of an emergency.

Noted: Read all instructions and save for future use.

Accessories list

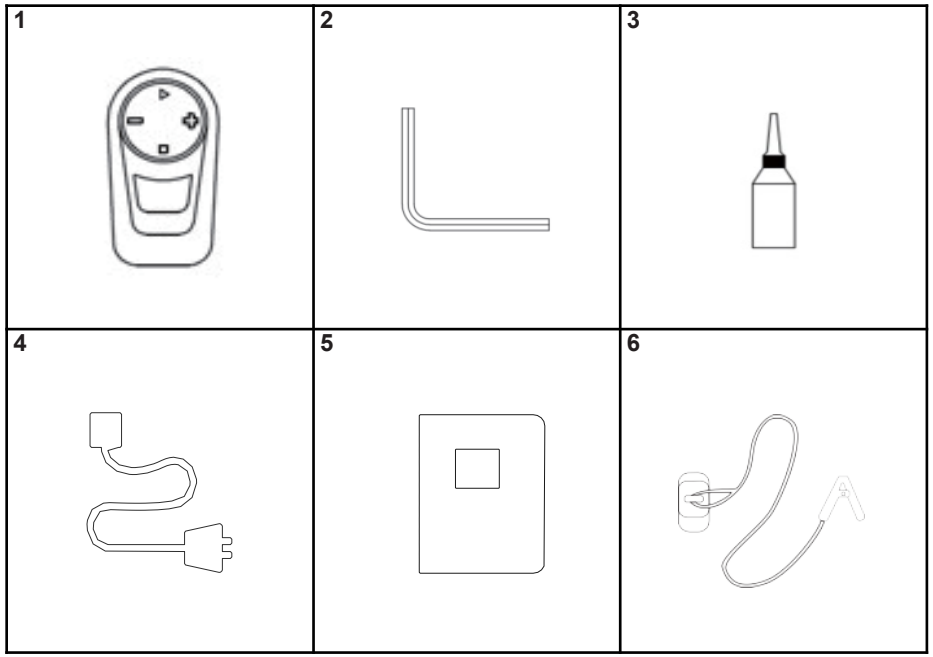

1. RF Remote Controller X 1
2. Allen Wrench 5mm X 1
3. Lubricant Oil X 2
4. Power Cord 1.8m X 1
5. User Manual X 1
6. Safety Key (For M1T Only) X 1

Buttons on Remote Control

Start: In standby or paused status, press this button to start the treadmill.

Stop: in the running status, press this button to stop the treadmill.

Speed Up

Speed Down

Installing the Battery for Remote Control

Remote Control Match Instructions

Noted:
The remote control comes pre-matched as a factory default, so you can usually use it immediately after unboxing. However, if you find that the treadmill is not responding to the remote, please follow the steps below to match it with your treadmill.

To match the remote with treadmill, please follow these procedures:

Press and hold the "START" button on the remote control and simultaneously switch on the treadmill. After 3 seconds, release the remote button. The matching process will be completed, and the remote control will now be able to operate the treadmill.

You may need to match the remote control with your treadmill under the following circumstances:

•If your original remote control is lost or broken, and you have a new replacement remote;

•If you have confused your remote control with those belonging to your roommates or colleagues who use the same model of treadmill, you will need to match the remote controls again.

Switching between metric and imperial systems on Remote Control:

- Turn off the treadmill power switch.
- Press and hold the "-" button on the remote control and turn on the power switch until the treadmill window displays "SI" or “Eng”, "SI" means metric and "Eng" means imperial. Press the "+" or "-" button on the remote control to switch " SI" and "Eng", press the "Start" button to save the setting.

Starting an Exercise Program

Before you begin an exercise program or substantially increase your level of activity, be sure to consult your primary care physician, In preparation for a visit you may also want to take the PAR-Q Assessment This Physical Activity Readiness Questionnaire (PAR-O) will help you determine your suitability for beginning an exercise program and prepare you for discussing your physical activity program with your physician.

Has your doctor ever said that you have a heart condition or that you should participate in physician activity only as recommended by a doctor?
Do you feel pain in your chest during physical activity?
In the past month, have you had chest pain when you were not doing physical activity?
Do you lose your balance because of dizziness?
Do you ever lose consciousness?
Do you have a bone or joint problem that could be made worse by a change in your physical activity
Is your doctor currently prescribing drugs for your blood pressure or a heart condition?
Do you know of any reason you should not participate in physical activity?

if you answered yes to one or more of the questions, if you are over 40 years of age and have been inactive, or if you are concerned about your health, consult a physician before beginning an exercise program or substantially increasing your physical activity. If you answered no to each question, then it's likely you can begin an exercise program.

Pre-Exercise Resting Heart Rate Check
Before beginning your exercise program it is recommended that you check your resting heart rate, Your resting heart rate should be taken in a seated, relaxed position. Find your resting pulse and begin your count with "zero“ on the first heart beat, Continue counting each time you feel your pulse until you have counted for a full 30 seconds, Next, double the number that you counted for 30 seconds and you now have your pre-exercise resting heart rate, Remember this number as we also recommend taking a post. exercise resting heart rate after you have completed your exercise program and you will want to remember your pre-exercise heart rate so you can compare the two heart rate measurements.

Assembly Steps

At Egofit we strive to make our equipment easy to assemble and start using.

The M1 model treadmill come completely assembled in the box and are ready to operate immediately.

The M1T model treadmill come completely assembled in the box and are ready to operate in just minutes.
•Step 1: Remove Treadmill from Box
•Step 2: Remove Bag and Packaging Material from Treadmill.
•Step 3: Stand up the handlebar.

A. Rotate the black round cap on each side at the bottom of the handlebar 1 or 2 full turn counterclockwise to release any pressure on the locking mechanism.

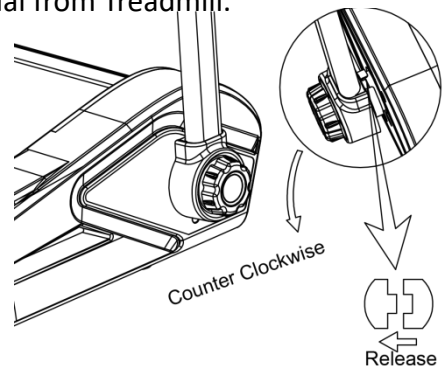

B. Raise the handlebar to the upright position.

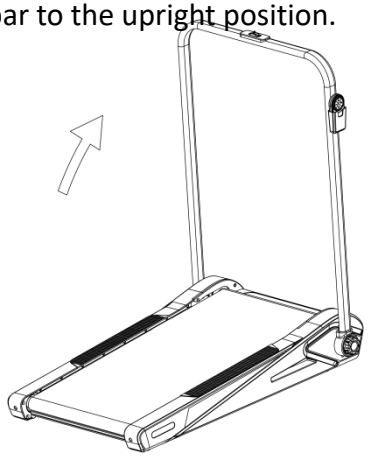

C. Turn the black round cap clockwise to tighten and secure the joint. Repeat on the opposite side.

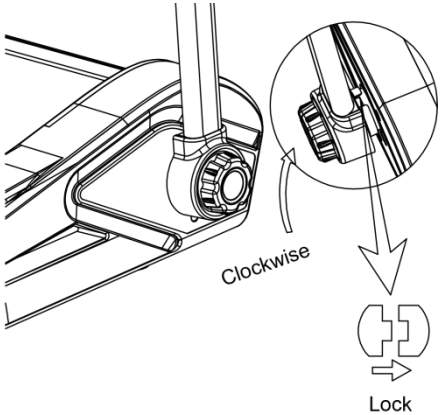

Caution: Injury to the user could occur if black cap is not pushed into the locked position and cap is not securely tightened. This could result in handlebar falling.

Leveling the Treadmill
For optimum performance the treadmill should be level, making sure that the treadmill sits stable and even on the floor.

Adequate Space
Make sure you have room to lay the treadmill down. There needs to be at least 2 feet of clearance on both sides and in the front of the treadmill. There should be at least 4 feet of clearance on the back side of the treadmill for safety reasons. If the user were to fall this would give adequate clearance to get off the treadmill.

Moving
The treadmill is equipped with transport wheels located in front. To move, lift up on the back end of the frame. Relocate the treadmill by rolling the treadmill on these wheels.

Operate Desktop Console （Sold Separately）

After assembling the Treadmill, roll it to the desired location. Plug the console connector into the connector coming from the front bottom of the Treadmill.

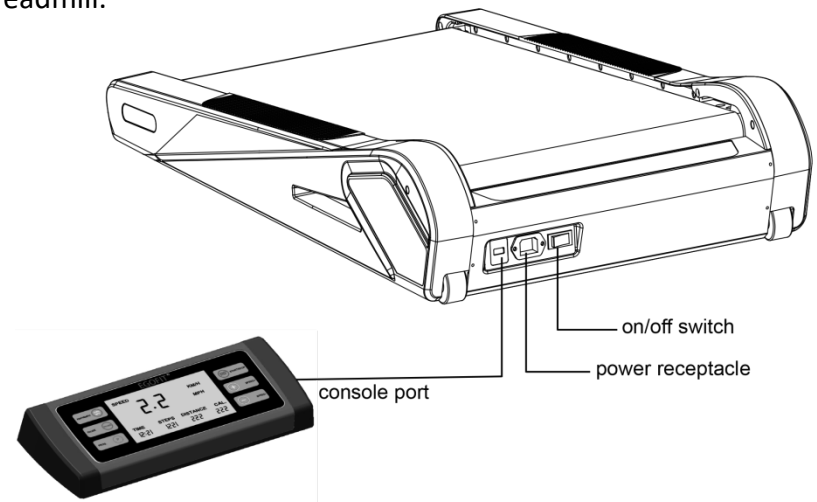

Noted: Do not plug the power cord into the equipment until the console is connected.

Desktop Console Overview & Specifications

Noted: Desktop Console is an option gadget not included in the package, needs purchase separately.

Console Power Buttons

1. Start/Stop: In standby or paused status, press this button to start the treadmill, In the running status, press this button to stop the treadmill.

2. Pause: In the running status, press this button to pause the treadmill. The TIME window displays "PAU", the SPEED window displays "1.0KM/H" or "0.6MPH", and the other windows display relevant workout data.

3. KMH/MPH Switch: In standby mode, press this button to switch the display readouts for speed between metric and Imperial readouts

4. Mode: In standby mode, press this button to cycle through manual mode, time countdown mode, distance countdown mode and calories countdown mode..

5. “Λ”Speed Up: Increase speed, Each adjustment range is 0.1KM/H or 0.1MPH.

6. “V”Speed Down: Decrease speed, Each adjustment range is 0.1KM/H or 0.1MPH.

Console	Treadmill Desk
Readouts	Time, Steps, Calories, Distance, Speed.
Display	LED
Buttons	Start/Stop, Pause, KMH/MPH Switch, Mode, Speed Up/Down

Starting the Treadmill from Desktop Console

1. Turn the power switch on. It is located on the front right corner of the treadmill.
2. Press the Start button to start the treadmill belt. The console will start counting up from 0:00.
3. Press the speed buttons to adjust speed.

NOTE:

The steps are counted normally from 1 to 9,999 steps. After 9,999 steps, the display format changes to accommodate more than four digits. Take the number shown in the display and add a zero to the right for the correct number of steps.

Below are examples of what the display will read and what those numbers mean:

1001=10,010 steps	1005=10,050 steps	1100=11,000 steps

Belt Lubrication

Use only 100% silicone and avoid using aerosol silicone sprays which include additives and petroleum distillates. One ounce of silicone should be used for each application. Egofit offers 100% silicone lubricant that can be ordered at www.egofitwalker.com.

The walking belt comes pre-lubricated from the factory. The M1 and M1T should be lubricated every 3 months (regardless of use) or every 50 hours of use.

To lubricate, unplug your treadmill. Slide your hand under the belt and lift the belt away from the deck. Apply about a dozen sprays toward the center of the belt from each side. Rotate the belt 1/3 and repeat this application. Rotate another 1/3 and repeat once more. Plug the treadmill in and walk for a few minutes to disperse lube evenly.

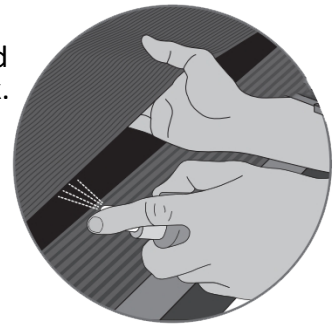

Belt Tensioning

If the belt begins to slip and needs to be tensioned, tension bolts are accessible from the back of the treadmill. Before tensioning the belt, start the treadmill and set the speed to 3 mph (5 kmh).

A. Using a 6 mm Allen wrench, included in your hardware bag, turn the right and left tension bolts 1/2 turn clockwise.
B. Test to see if the slipping is eliminated. If the belt slips repeat step A and test again

Note: Over tensioning the belt can cause unnecessary friction and wear and tear on the belt, motor and electronics.

Note: Adjusting one side more than the other will cause the belt to drift to the side of the treadmill and will require belt alignment. Check to be sure the running belt is still aligned. If belt alignment is off as shown below, refer to Belt Alignment section.

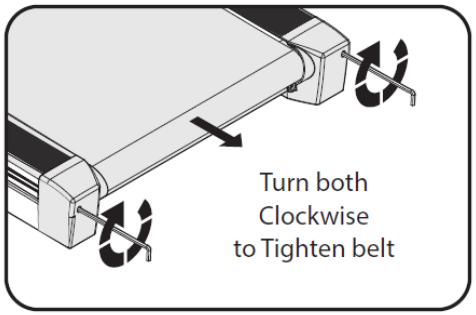

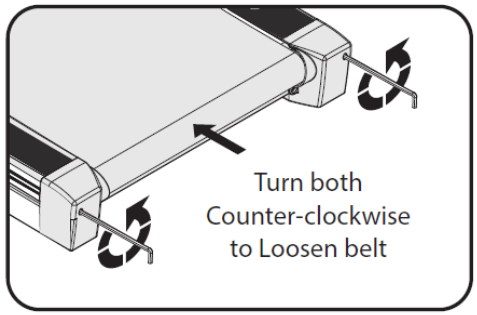

CAUTION: DO NOT tighten more than 2 full turns on each side. Over tensioning the belt can cause unnecessary friction and wear and tear on the belt, motor and electronics.

Belt Alignment

A. Press Start, then increase the treadmill speed to 3 mph (5 kph).
B. Stand behind the treadmill to see which way the belt is drifting.
C. If the belt drifts to the left, turn the left adjustment bolt 1/4 turn clockwise and the right adjustment bolt 1/4 turn counter-clockwise. (See FIG. 1)
D. If the belt drifts to the right, turn the left adjustment bolt 1/4 turn counter-clockwise and the right adjustment bolt 1/4 turn clockwise. (See FIG. 2)
E. Observe the alignment for two minutes. Repeat steps A-D as needed.

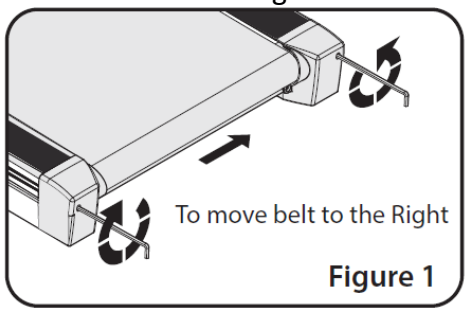

Figure 1

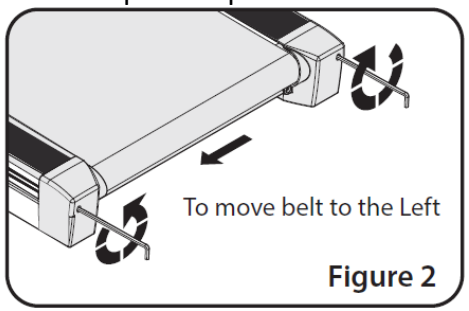

Figure 2

Troubleshooting

PROBLEM	POSSIBLE CAUSE	CHECKING	CORRECTION
E01	Abnormal communication between the lower controller and the console after powering on.	The console cables are not connected well.	Connect the console cables properly.
		No signal output from the console.	Change the console.
		No signal output from the lower controller.	Change the lower controller.
E02	Lower controller can't detect the voltage of motor.	The motor cables are not connected well.	Connect the motor cables properly.
		No voltage output or abnormal voltage output from the lower control to the motor.	Change the lower controller.
		Motor is out of order.	Change the motor.
E03	Lower control can't detect speed signal.	PWM drive circuit failure of lower control	Change the lower controller.
E04	Overvoltage protection.	The load of the treadmill exceeds the rated working voltage of the motor.	The load on the treadmill must be within the rated operational voltage.
		The treadmill motor works abnormally.	Change the motor.
		Detecting failure from the lower controller to the motor overvoltage.	Change the lower controller.
E05	Over current protection	The load of the treadmill exceeds the rated working current of the motor.	The load on the treadmill must be within the rated operational current.
		Wrong assembly of the motor causes the resistance or blocking of the motor.	Check if the assembly of motor is correct.
		Failure of lower control limiting current system.	Change the lower controller.
E06	Driving power supply voltage is too low.	Voltage output is too low.	Check the power supply line is normal.
		The lower controller can not detects the signal of the circuit.	Change the lower controller.
E07	Without Safety key attached or failure	Check safety key attached or not	Install the safety key

FAQs

Q: Just bought a new treadmill. Should I be concerned about the line on the running belt?

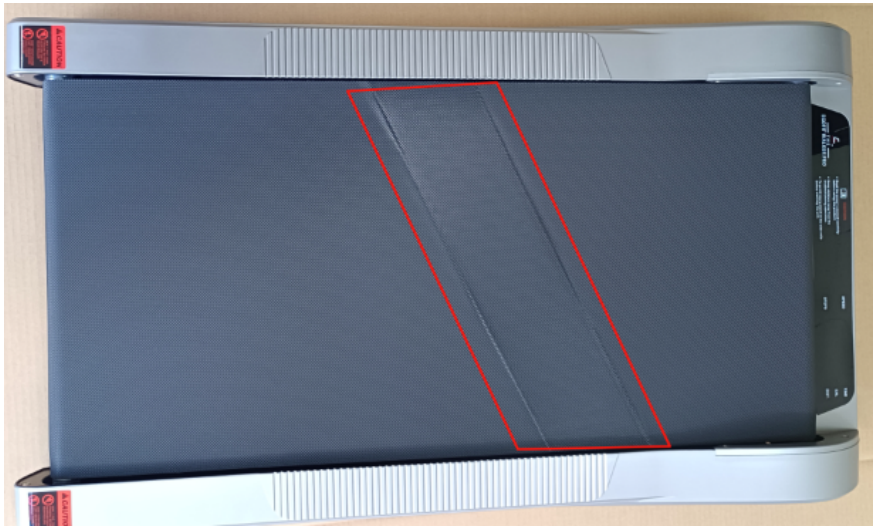

A: This is Seal line, The process of joining the belt to itself leaves a visible "seal line", indicating where the belt has been joined together. this line are a perfectly normal part of treadmills, All treadmills have something similar and are not a cause for concern, they will not impede the function of the treadmill.

Q: when I turn it on, I get this read out on the screen **"- - - -" or "E07"**. Do you have any idea what I can do or is it broken?

A: This Screen error **"- - - -" or "E07"** showing because of the safety key not detected, check if the safety key attached on the handlebar correctly.