上海增信电子有限公司

ShangHai Signal Plus Technology Co.,Ltd.

规 格 承 认 书

SPECIFICATION FOR APPROVAL

日期
DATE: _____

版本
REV.: _____

客　　户
CUSTOMER: _____

客 户 料 号
CUSTOMER P/N: _____

品　　名
PART NAME: External antenna Black 2.4G 2dBi SMA-Male

供 方 料 号
SUPPLIER P/N: WZW02SMAJ002

送样日期Date:　　送样数量Q'TY:　　Pcs

客户确认CUSTOMER APPROVED BY		
核准 Approvaled by	审核 Checked by	拟制 Prepared by

供方确认SUPPLIER SIGNATURE		
核准 Approvaled by	审核 Checked by	拟制 Prepared by
Jack		andy

上海增信电子有限公司 DCC发行章 SIGNAL PLUS TECHNOLOGY CO.,LTD

ZX-QT-RD-0011-A1

Add:上海市徐汇区桂箐路69号30栋603室　Tel:021-54266190　Fax:021-54266191

REV	DATE	DESCRIPTION
X1	11/18-2019	New Issue
A	03/27-2020	X1-A
X2	01/05-2022	更新天线说明

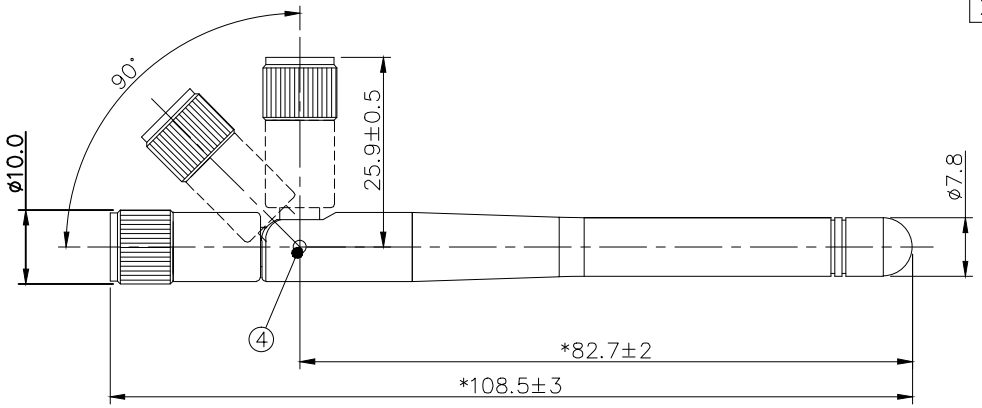

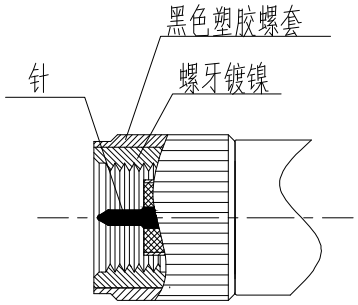

视图 A

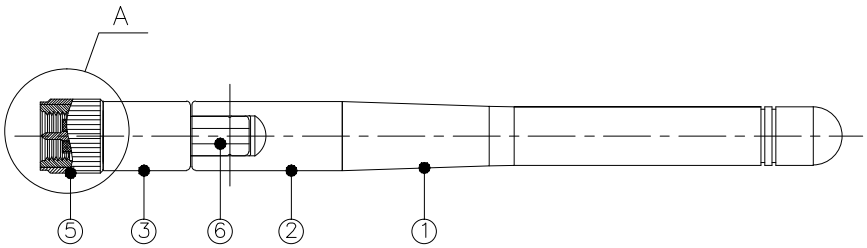

Specification:
Frequency Range: 2.4-2.5GHZ
Impendance: 50Ω
VSWR: 2.0MAX
Polarization: Vertical
Radiation: Omni
Gain: 2.5dBi
产品须符合ROHS2.0要求
带"*"为重点管控尺寸。

NO	DESCRIPTION		Q'TY	REMARK
6	Cable	RG-178 Cable,Brown; 50Ω	1	
5	Connector	SMA内螺纹(针)，黑色塑胶螺套，牙镀镍，壳体镀镍	1	
4	Rivet	POM; Color: Black	2	
3	Antenna Base	PC+PBT; Color: Black	1	
2	Antenna Base	PC; Color: Black	1	
1	Antenna Cover	TPEE; Color: Black	1	

CUSTOMER'S SINGATURE

XXX.	±2.0	APPROVED	
XX.	±1.0		
X.	±0.5	CHECKED	
.X	±0.3		
.XX	±0.2	DRAWING	

CUSTOMER:
PART NO:
PART NAME: RF Antenna Assembly
Z&X P/NO: WZW02SMAJ002

REV	UNIT	FILE:
X2	mm	SHEET: 1/1

上海增信电子有限公司
Signal Plus Technology Co.,Ltd.

List of contents

- Test setup
- Antenna Solution
- S Parameter---Return Loss、Isolation
- Efficiency and Peak Gain
- Radiation Patterns

1.Test system description---S Parameter

1.1.Test Setup

1.1.1 VNA Test Setup

S parameter measurements (S_{11}) were performed using an KeySight E5071C Network Analyzer and previously described tests fixtures. The isolation between antennas is also tested. The testing was performed with apparatus in free space.

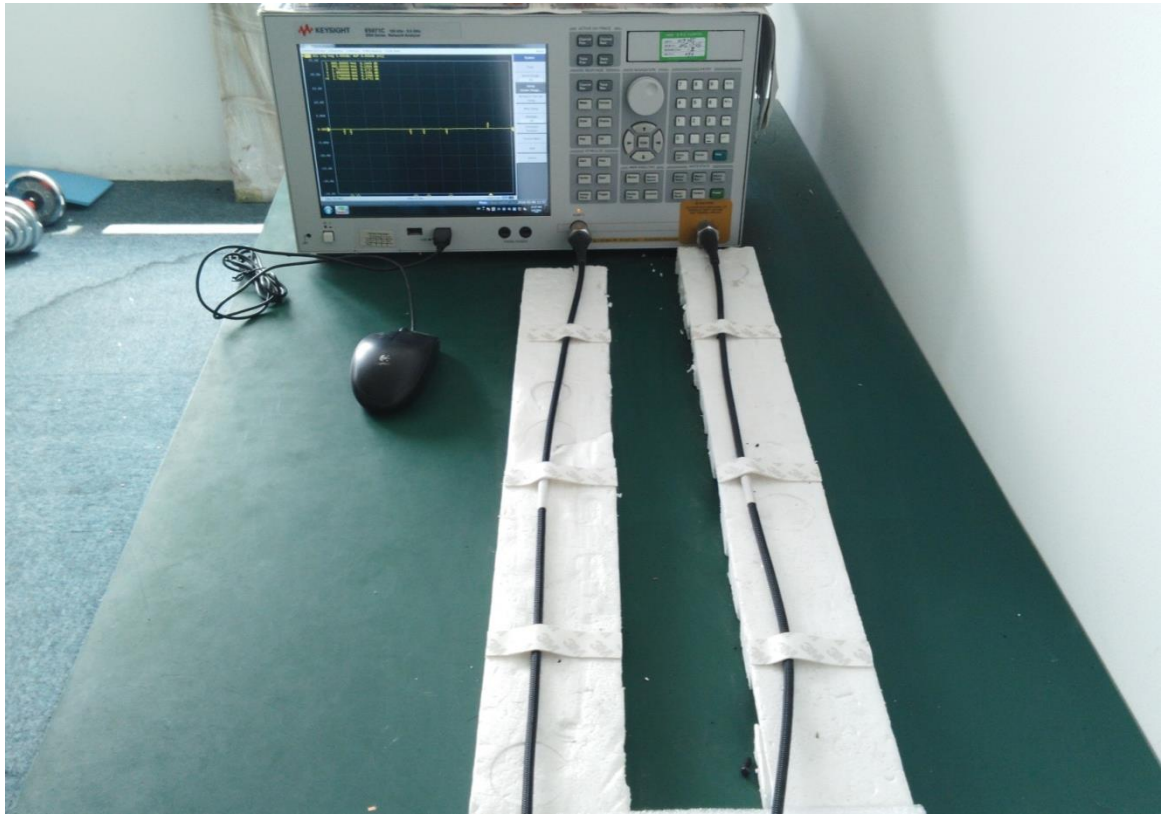

Signal Plus
Antennas

1.Test system description--- Anechoic Chamber Test Setup

1.1.2 Anechoic Chamber Test Setup

The gain of the antenna was measured in the anechoic chamber(ETS-3D). The chamber provides less than –30 dB reflectivity from 400 MHz through 6 GHz. The chamber size is:7m*4m*3m.The measurement results are calibrated using a leaky wave horn standard. We can measure the antenna gain and efficiency accurately.

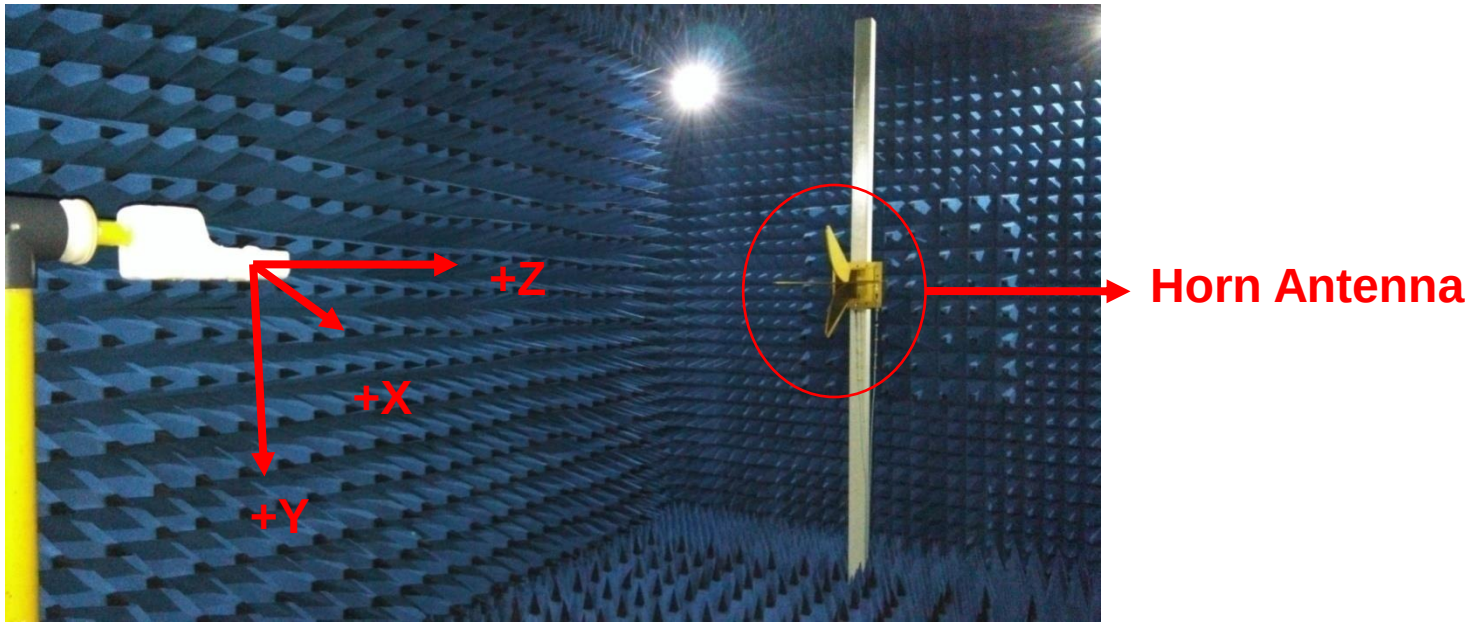

1.Test system description--- Test Instruments

1.1.3 Instruments

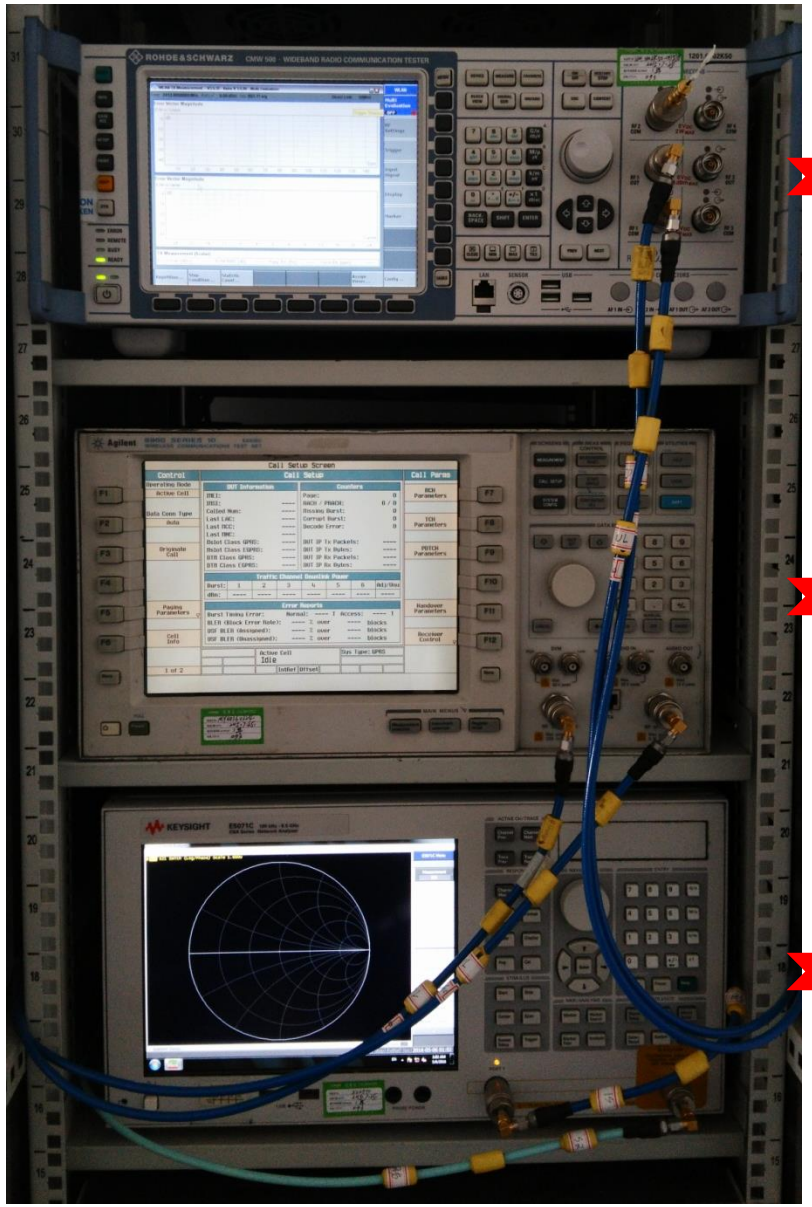

R&S CMW500
4G/WIFI
（LTE/WIFI b/g/a）

Agilent 8960
2G/3G
（GSM/CDMA/WCDMA）

KeySight E5071C
(400MHz~6GHz)

Signal Plus
Antennas

2. Antenna Solution

2.1 Antenna Location Pictures

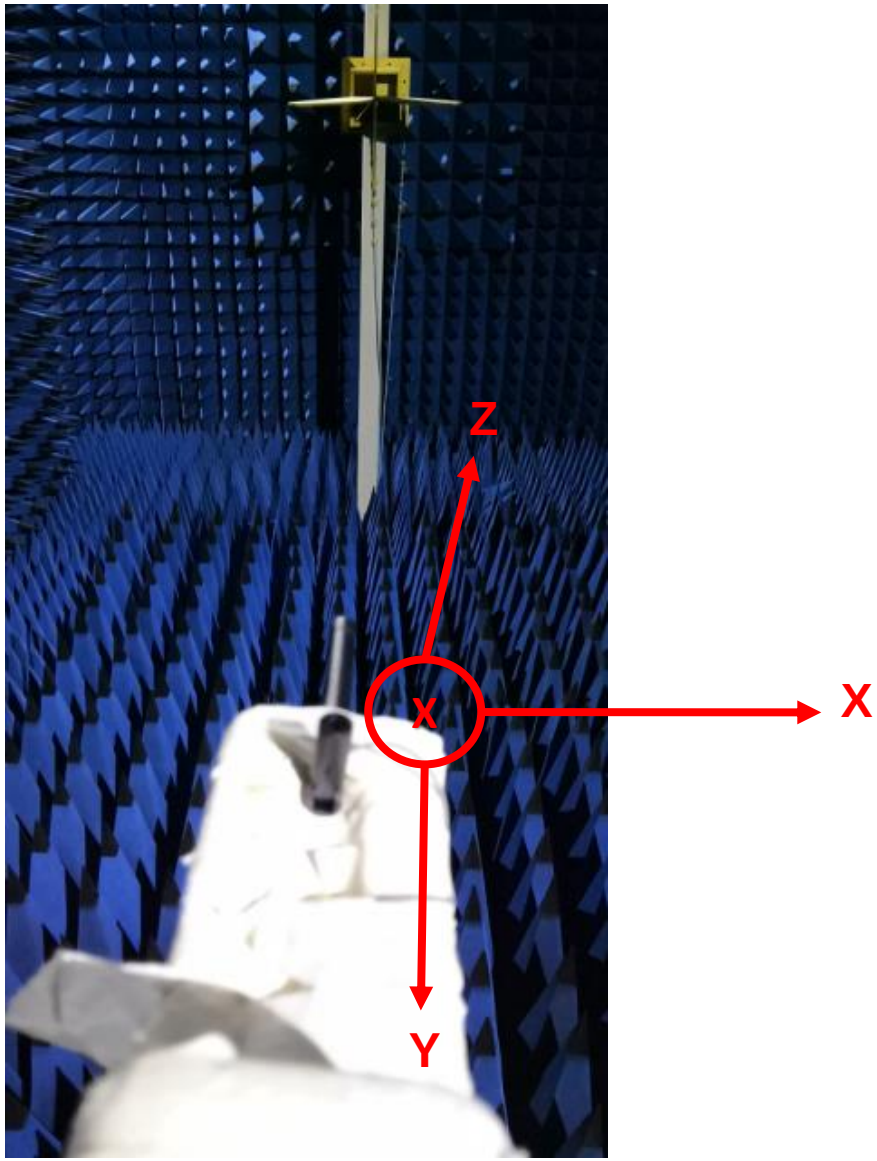

Signal Plus
Antennas

2. Antenna Solution

2.1 Antenna Location Pictures

3.Test Result---Efficiency、Gain

Data:

2.4G-Ant 1

Freq.(MHz)	2400	2450	2500
VSWR	1.52	1.28	1.35
Gain(dBi)	2.34	2.74	2.23
Eff.(%)	72.30	86.10	75.50

3.Test Result---Return Loss

S11（2.4G-ANT1）：

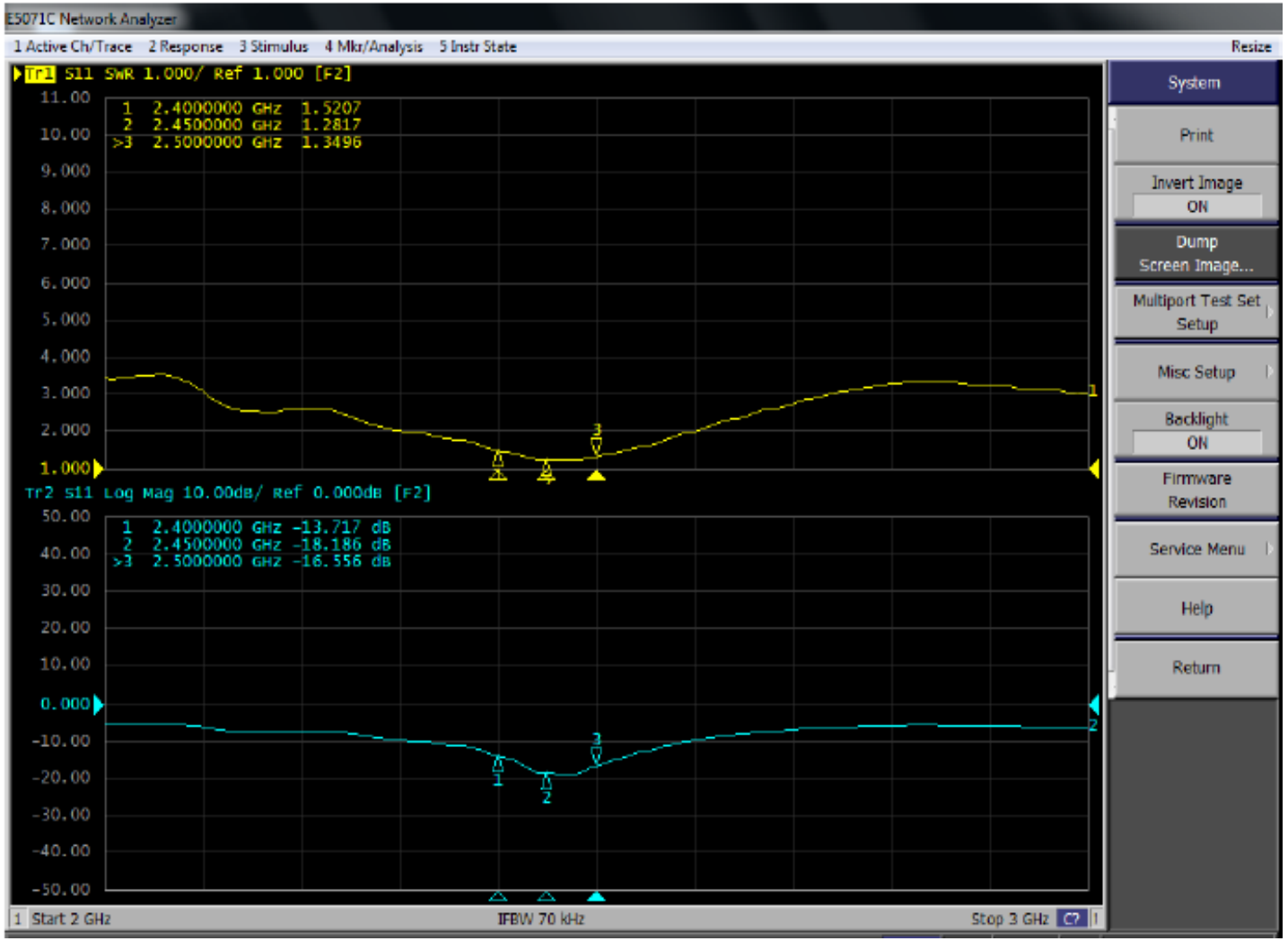

Signal Plus
Antennas

3.Test Result---Radiation Patterns

Data:
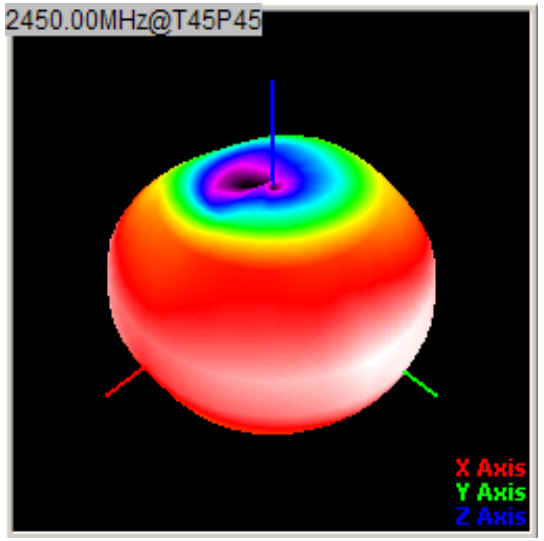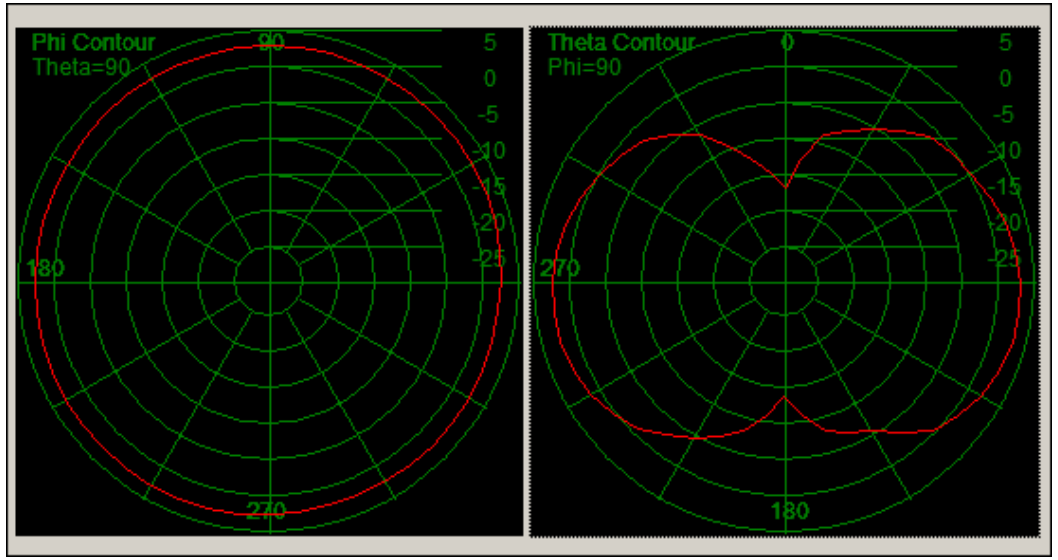
2.4G-Ant 1