STAR1

QUICK START GUIDE

Soundsark

WEARING STYL

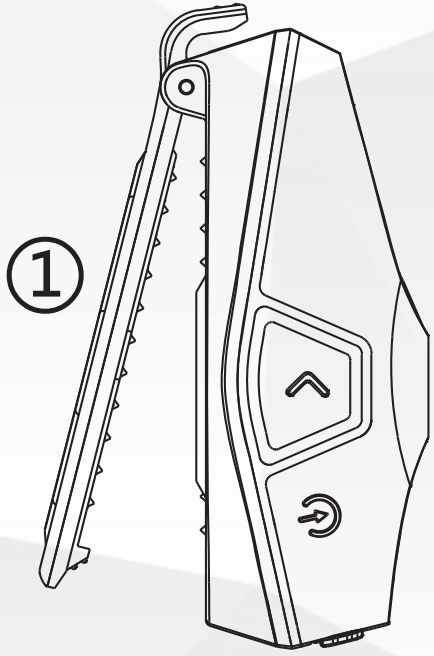

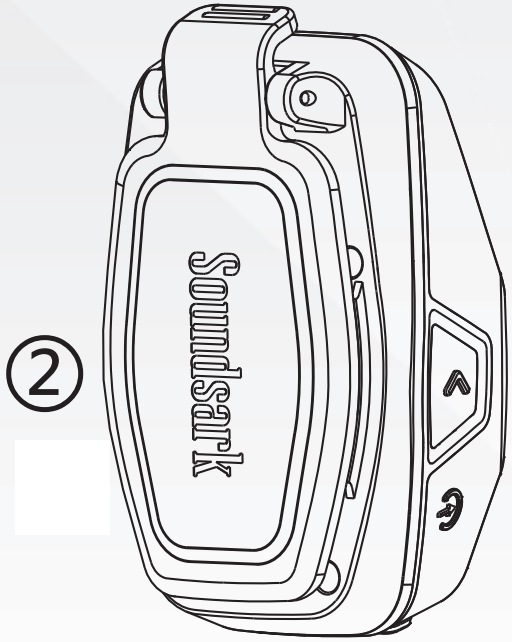

① STAR1 CLIPS ATTACH TO CLOTHING, BACKPACK STRAPS, ARM BANDS PANTS WAISTBAND

② CLIP WITH BUILT-IN MAGNET FOR ATTACHING TO METAL SURFACES.

CONVENIENT FUNCTION

QUICKLY AVAILABLE WHEN NOT TURNED ON

CHECK THE CURRENT TIME

FLASHLIGHT

ON/OFF
CURRENT TIME

ON/OFF
FLASHLIGHT

THE SCREEN TURNS OFF AUTOMATICALLY AFTER ABOUT 5 MINUTES OF INACTIVITY.

BUTTONS

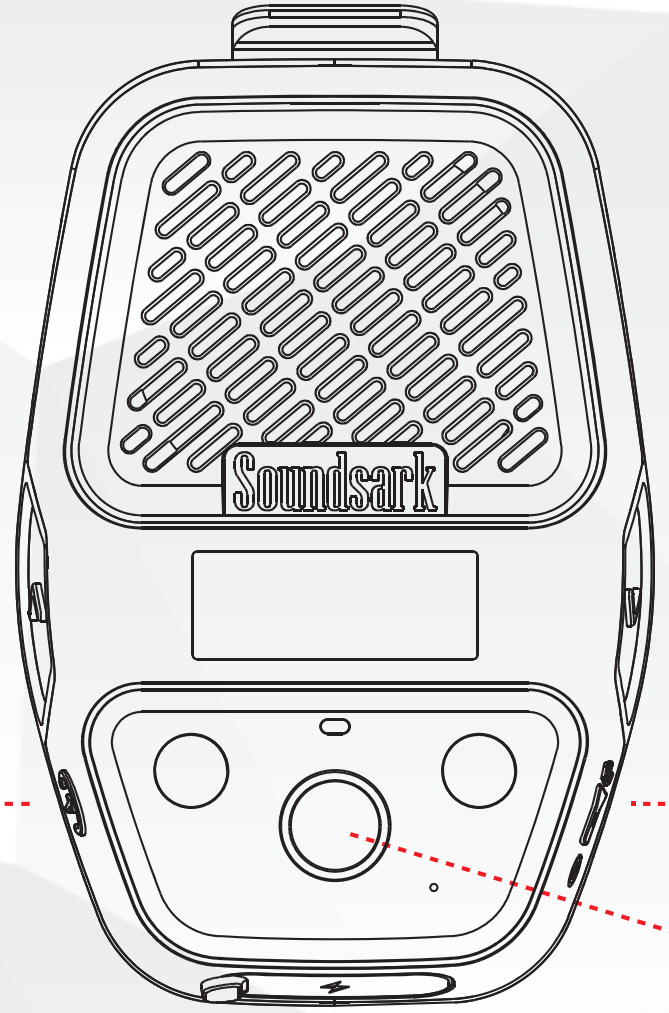

SHORT PRESS
VOLUME UP
LONG PRESS*
PREVIOUS TRACK

SHORT PRESS
VOLUME DOWN
LONG PRESS
NEXT TRACK

POWER*
ON/OFF

FLASHLIGHT
ON/OFF

PLAY/PAUSE*

*ANSWER/IGNORE INCOMING CALL: SHORT PRESS/DOUBLE-CLICK
END ON-GOING CALL:SHORT PRESS
SWITCH INCOMING CALL & SIRI/ANDROID:DOUBLE-CLICK
*PRESS THE ⊖ AND ○ BUTTONS SIMULTANEOUSLY FOR ≥5S:DISCONNECT BLUETOOTH
*PRESS THE ∧ AND ○ BUTTONS SIMULTANEOUSLY FOR ≥5S:TWS AUTO-PAIR/DISCONNECT
BLUE INDICATOR LIGHT TURNS ON WHEN PAIRING IS SUCCESSFUL

BLUETOOTH PAIRING

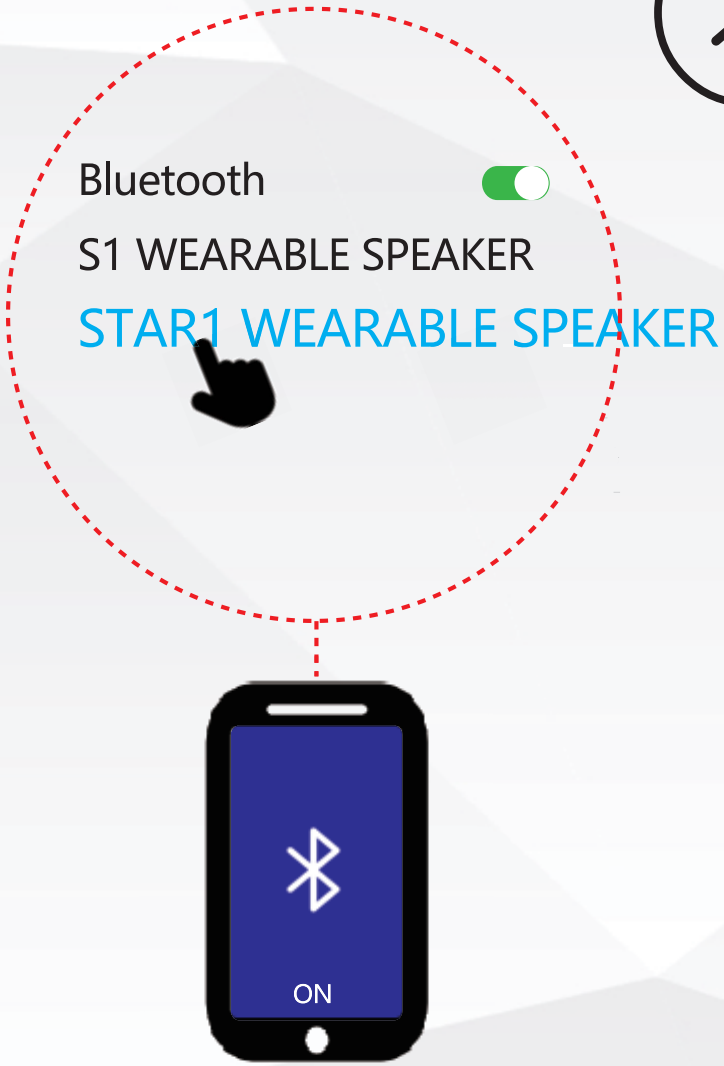

FLASHES: NO PAIRING/DISCONNECT
STAYS: PAIRING

PAUSE

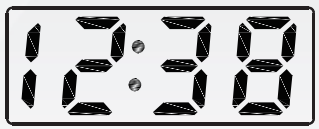

THE CURRENT TIME WILL BE DISPLAYED ON THE SCREEN AFTER 2 MINUTES
EXIT TIME DISPLAY WHEN BUTTON IS PRESSED

PHONE CALL
SIRI/ANDROID

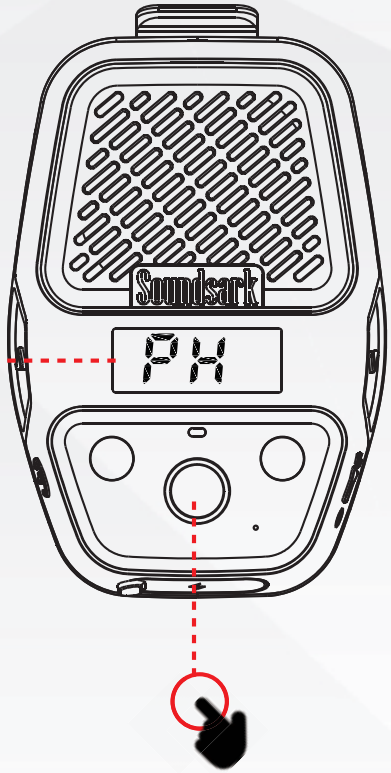

FLASHES: INCOMING CALL
STAYS: ON-GOING CALL

ANSWER/IGNORE INCOMING CALL:
SHORT PRESS/DOUBLE-CLICK
END ON-GOING CALL: SHORT PRESS
SWITCH INCOMING CALL: DOUBLE-CLICK

SIRI/ANDROID: DOUBLE-CLICK

TWS
TRUE WIRELESS STEREO

COMBINE TWO STAR1 INTO A TRUE WIRELESS STEREO.

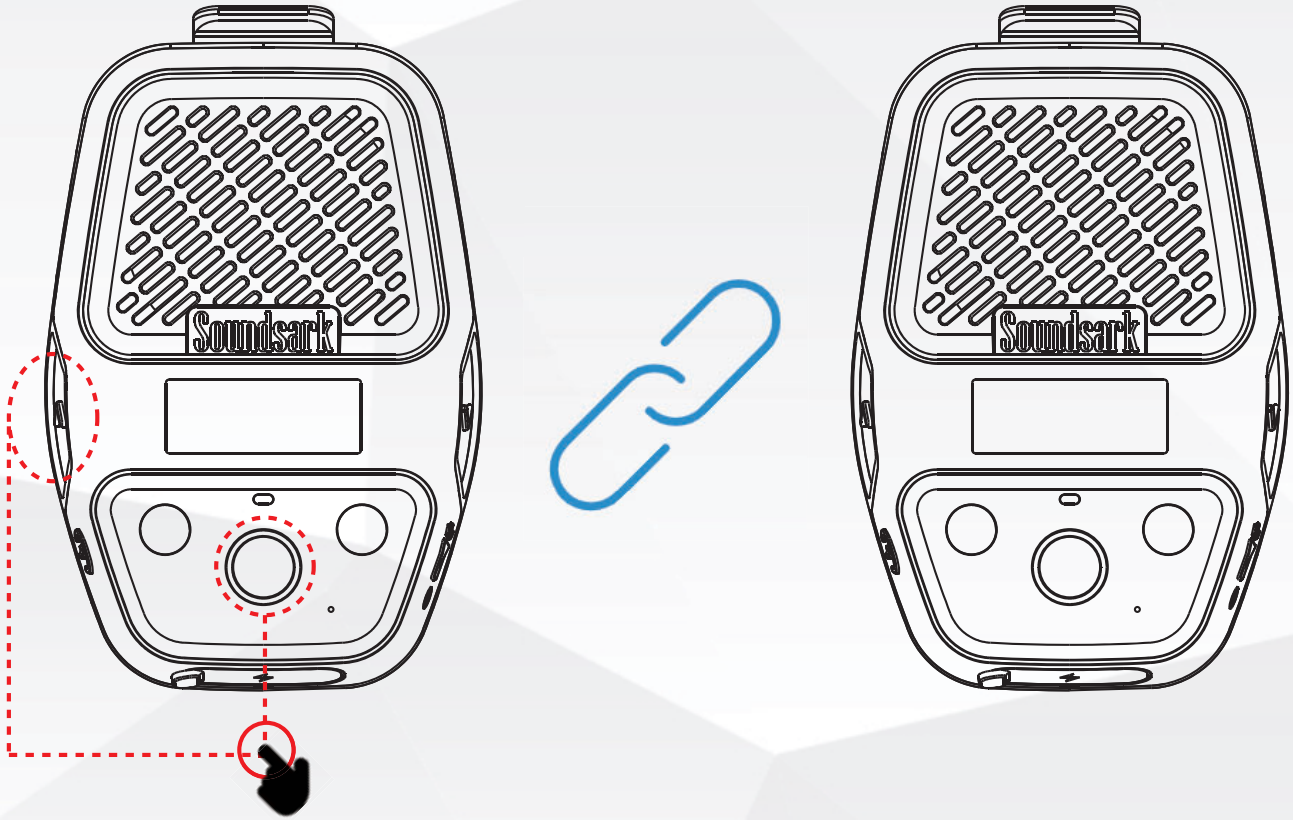

PRESS THE ^ AND ○ BUTTONS SIMULTANEOUSLY FOR ≥5S
TWS AUTO-PAIR/UNPAIRED
BLUE INDICATOR LIGHT TURNS ON WHEN PAIRING IS SUCCESSFUL
BLUE INDICATOR LIGHT TURNS OFF WHEN DISCONNECTED

CHARGING

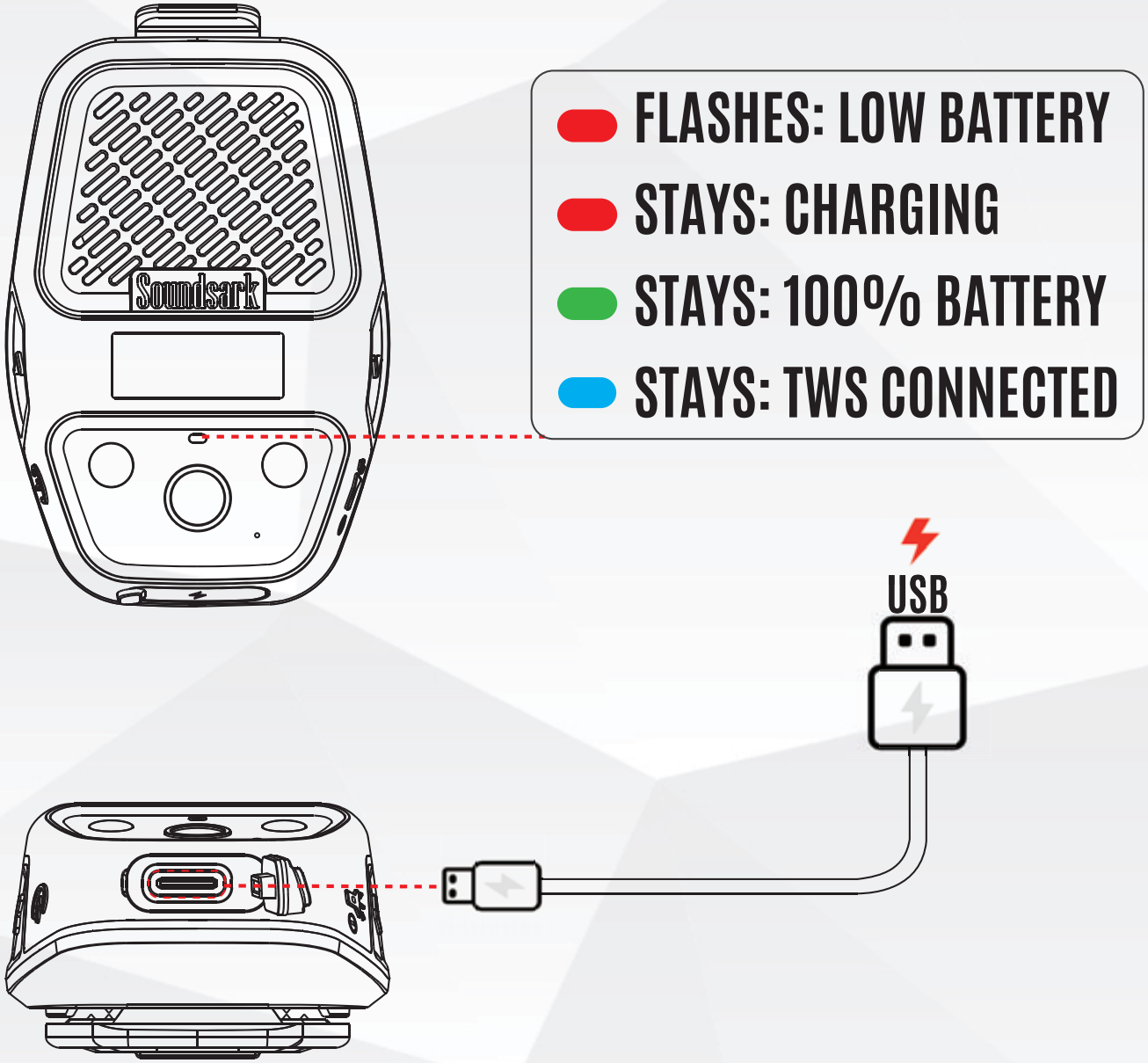
Soundcore
FLASHES: LOW BATTERY
STAYS: CHARGING
STAYS: 100% BATTERY
STAYS: TWS CONNECTED
USB

TECH SPEC

Transducer:	28 mm x 11mm
Output power:	3W RMS
Frequency response:	29OHz-20kHz
Signal-to-noise ratio:	>85dB
Battery capacity:	500mAh
Battery charge time:	1.5 hours(5V/1A)
Music play time:	up to 8 hours(dependent on volume level and audio content)
LED torch time:	2 hours
Bluetooth version:	V5.3
Bluetooth profile:	GFSK. /4 QPSK
Bluetooth transmitter frequency range:	2402MHz-2480MHz
Bluetooth transmitter power:	<5 dBm(EIRP)
Bluetooth transmitter modulation:	A2DP AVRCP HFP
Dimensions (W x H x D):	42 mm x 64 mm x 29mm
Weight:	0.058kg
Maximum operation temperature:	45℃

To protect battery lifespan, fully charge at least once every 3 months. Battery life will vary due to usage patterns andenvironmental conditions.

Do not expose the SOUNDS-ARK STAR1 to liquids without removing cable connection.
Do not expose SOUNDS-ARK STAR1 to water while charging. do not charge your speaker until it's completely dry and clean.
Charging when wet might damage your speaker.
When using an external adapter, the output voltage/ current of the external adapter should not exceed 5V/3A.

Soundsark

Designed by Soundsark

www.soundsark.com support@soundsark.com

Copyright © 2024 Soundsark All Rights Reserved.

FCC Warnning:

This equipment has been tested and found to comply with the limits for a Class B digital device, pursuant to part 15 of the FCC Rules. These limits are designed to provide reasonable protection againstharmful interference in a residential installation. This equipment generates, uses and can radiateradio frequency energy and, if not installed and used in accordance with the instructions, maycause harmful interference to radio communications. However, there is no guarantee thatinterference will not occur in a particular installation. If this equipment does cause harmfulinterference to radio or television reception, which can be determined by turning the equipmentoff and on, the user is encouraged to try to correct the interference by one or more of thefollowing measures:

- Reorient or relocate the receiving antenna.
- Increase the separation between the equipment and receiver.
- Connect the equipment into an outlet on a circuit different from that to which the receiver is connected.
- Consult the dealer or an experienced radio/TV technician for help.

Caution: Any changes or modifications to this device not explicitly approved by manufacturer could void your authority to operate this equipment.

This device complies with part 15 of the FCC Rules. Operation is subject to the following two conditions:

(1)This device may not cause harmful interference, and (2) this device must accept any interference received, including interference that may cause undesired operation.

This equipment complies with FCC radiation exposure limits set forth for an uncontrolled environment. This equipment should be installed and operated with minimum distance 0cm between the radiator and your body.