User Manual

What's in the Box:

1. Alarm device

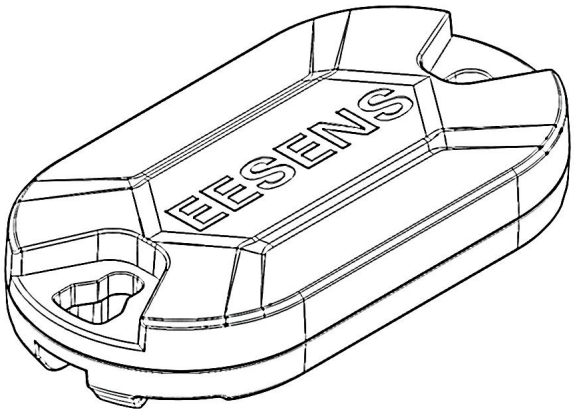

2. Alarm remote

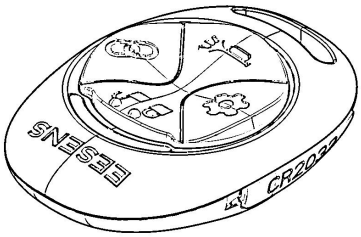

3. Plastic zip tie x 2

x2

4. Screw driver x 1

5. L wrench x 1

6. Carabiner x 1

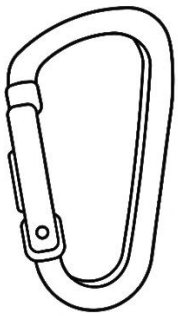

7. Plastic spacers x 2

H: 6mm x2

8. Security screws

L: 30mm x2

Alarm device Overview

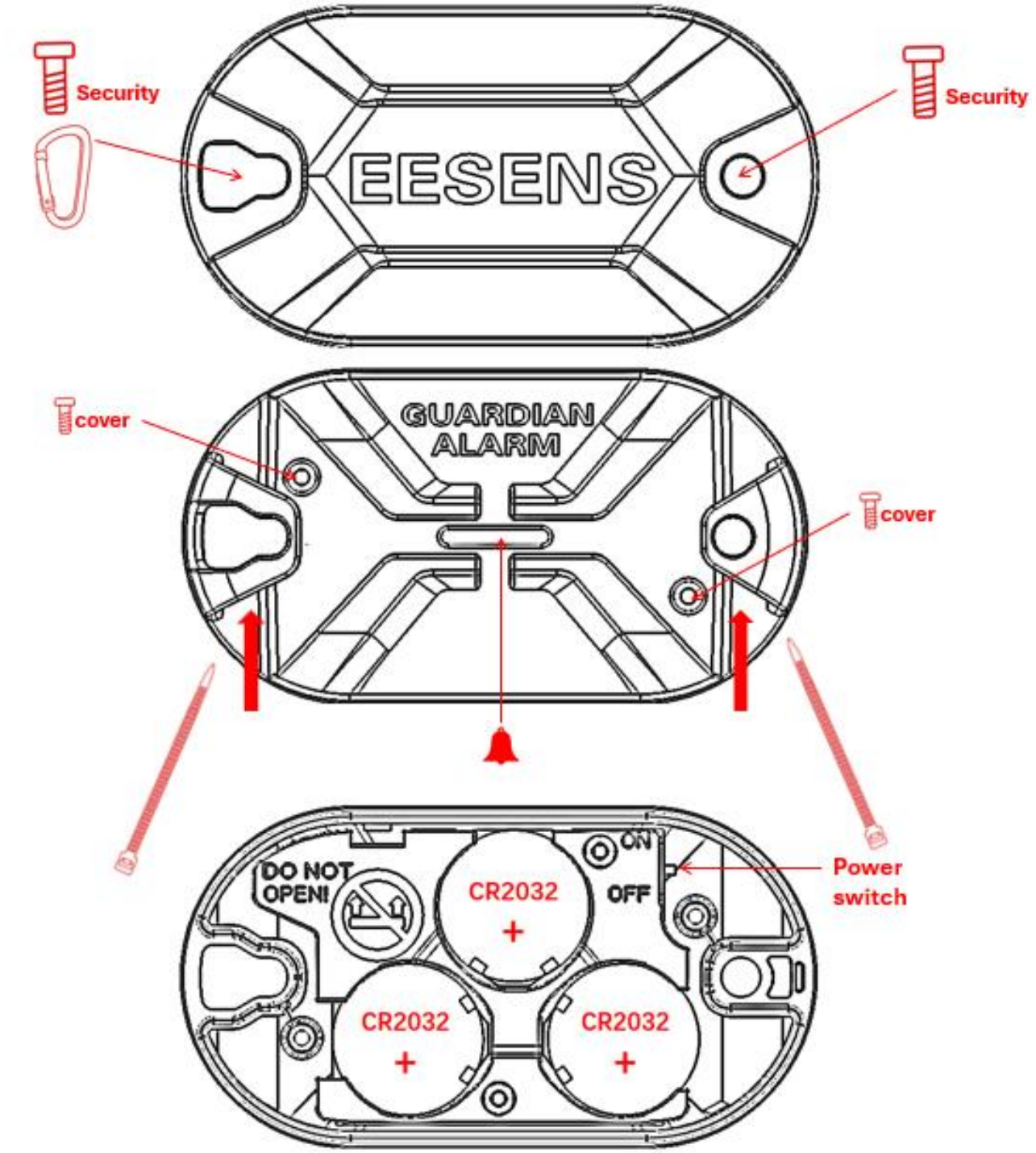

Initial commissioning

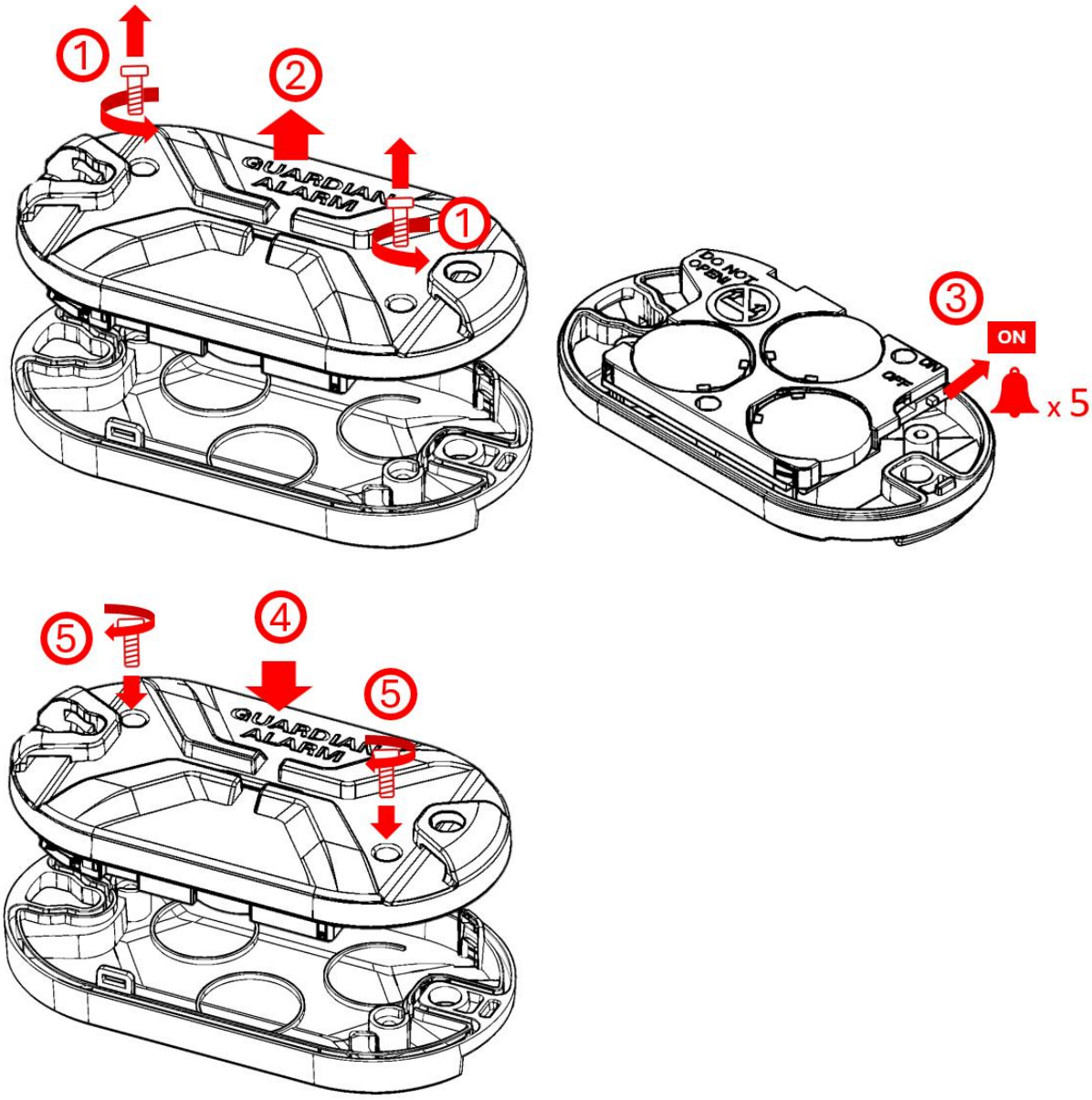

Battery Replacement

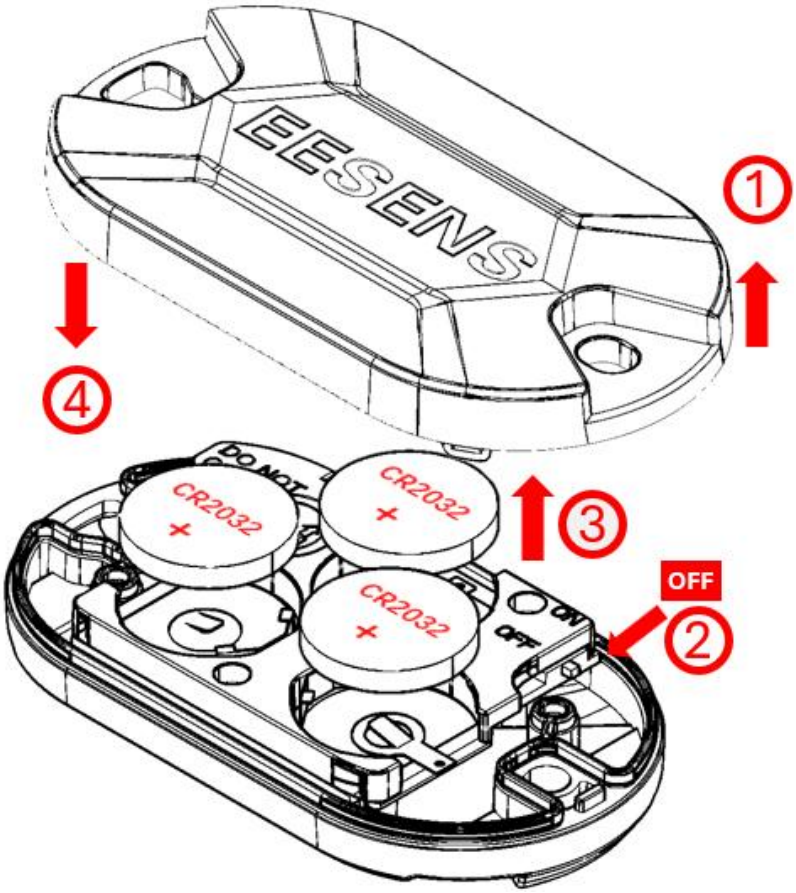

Alarm controller overview

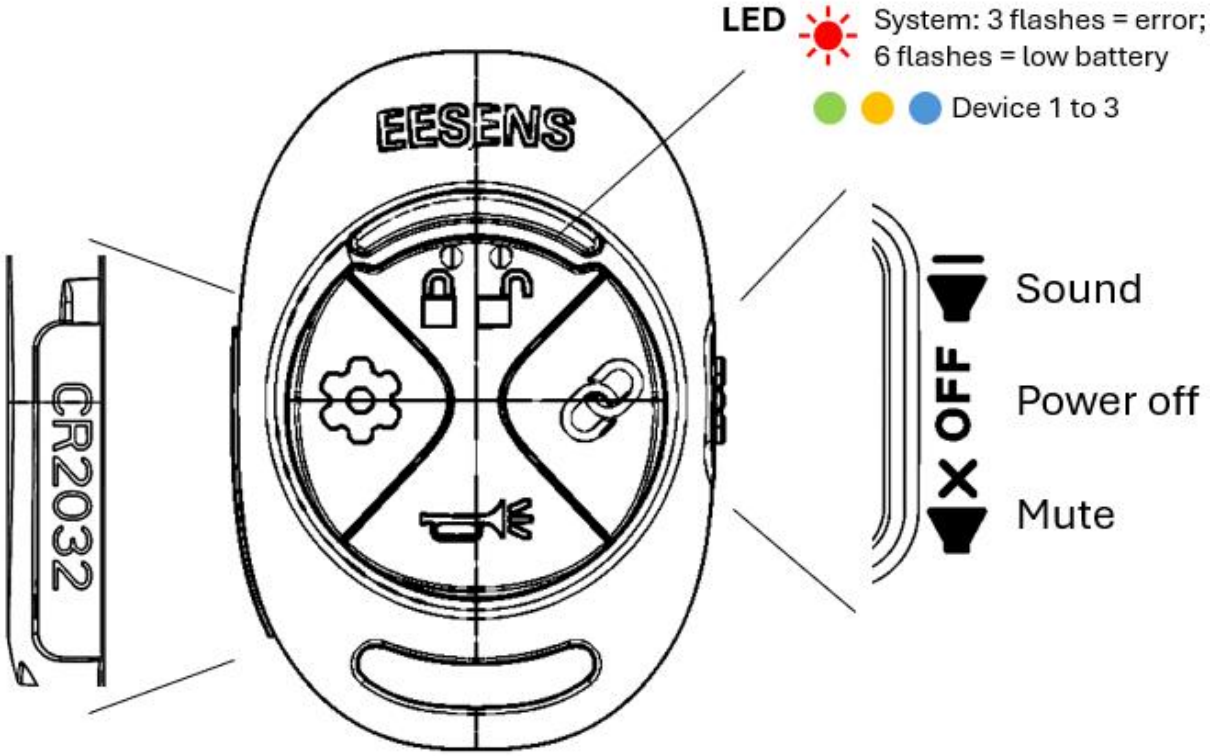

	● Short Press	▬ Press for 1 second
	Select device	Pairing
	Arm	Disarm
	Select alarm sound	Select movement sensitivity
	Find item nearby	Find item far away

Initial commissioning

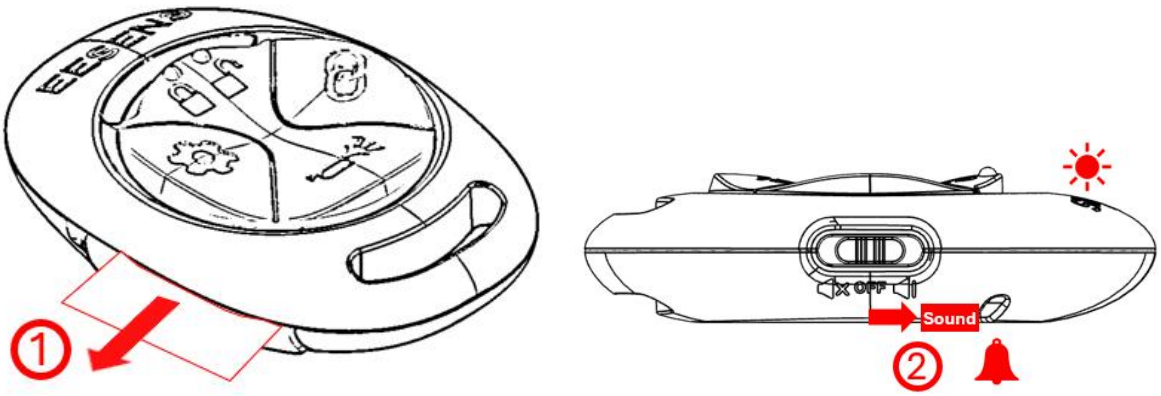

Battery Replacement

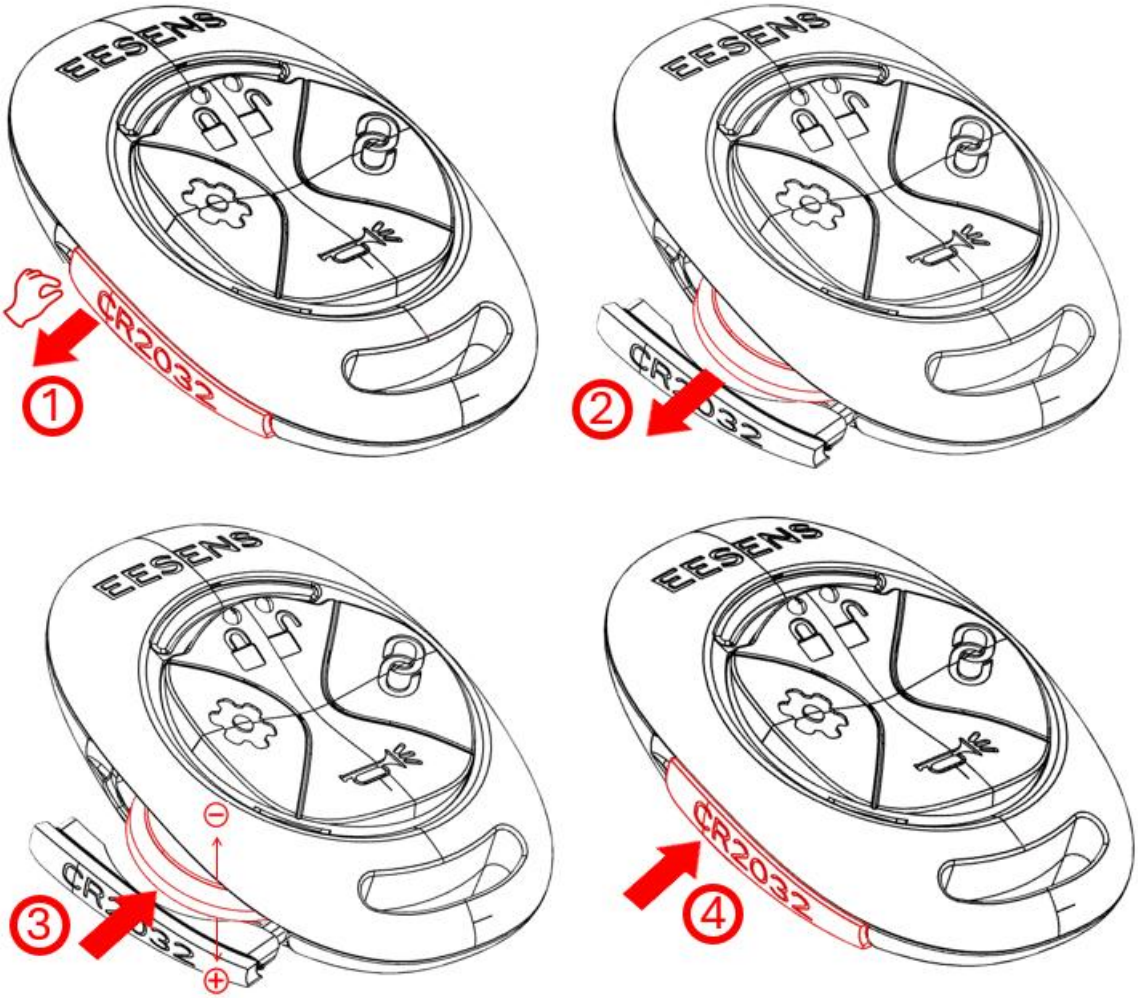

Install alarm device

Option 1: Attach to Water Bottle Cage Braze-ons (Without Water Bottle Cage)

- **Tools Needed:** L-wrench, two security screws, alarm device

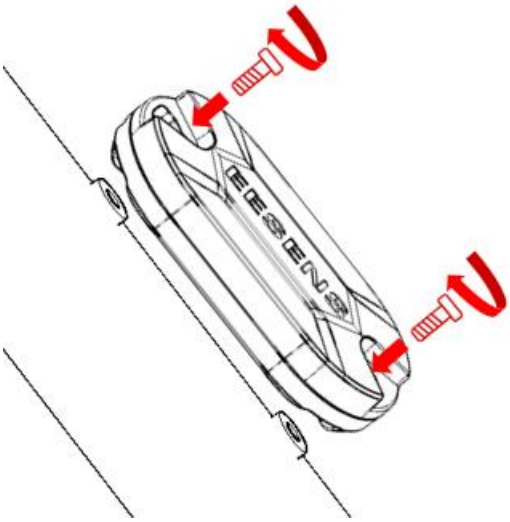

Option 2: Attach to Water Bottle Cage Braze-ons (With Water Bottle Cage)

- **Tools Needed:** L-wrench, two security screws, alarm device, two spacers, your water bottle cage

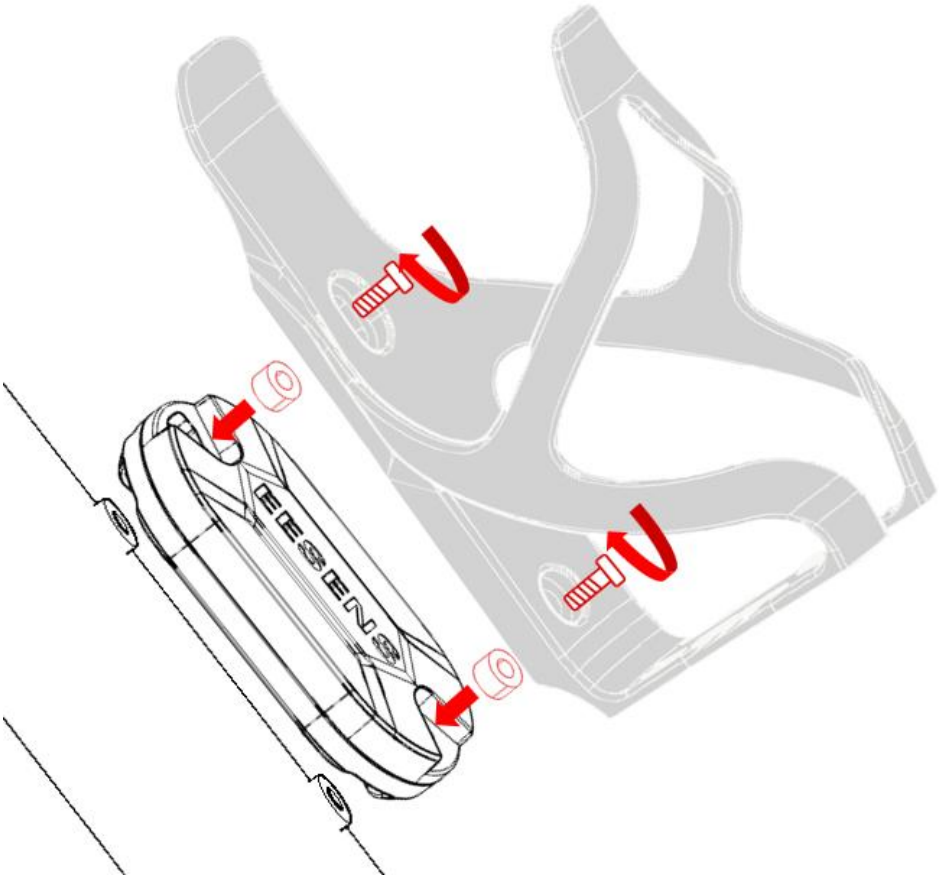

Option 3: Attach Using Zip Ties on a Strong Tube

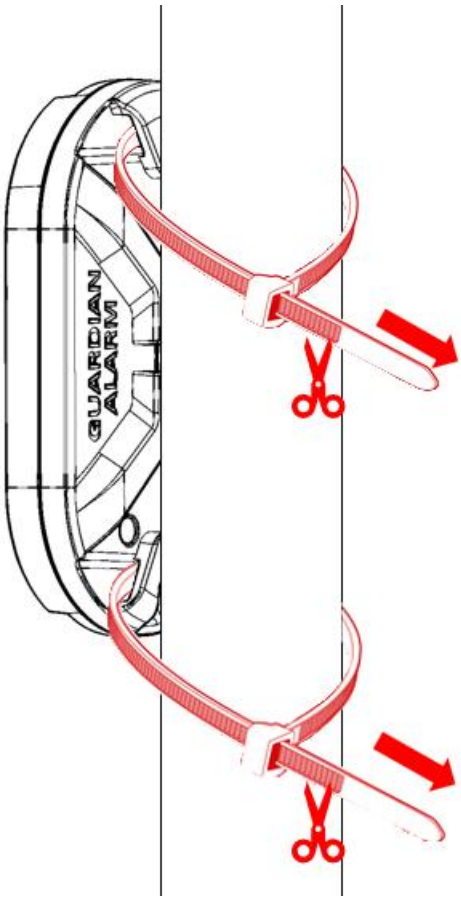

Option 4: Attach Using a Carabiner

A 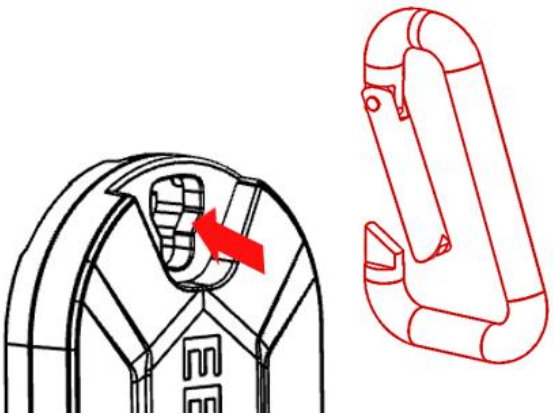

Option 5: Mount Using an Alarm Fixture Accessory (Available at EESENS Store)

Pairing a new device

Ensure the alarm device and the controller are within wireless range of each other.

1. Short Press the device button to select the desired alarm device color.
2. Restart the alarm device and listen for the pairing sound notification (x5).
3. Long Press the device button until the LED flashes continuously before pairing mode ends.
4. 2 Quick Beeps (x2) indicate that pairing has succeeded.

Unpairing a connected device

Ensure the alarm device and the controller are within wireless range of each other.

1. Short Press the device button to select the desired alarm device color.
2. Long Press the device button while simultaneously switching from OFF to SOUND
3. Release the device button when the alarm device emits the disarm sound. Unpairing has succeeded.

Battery instructions

- Use new CR2032 batteries in good condition from the same brand to maximize battery capacity.
- Replace the batteries immediately when the device shows a low power indicator. Performance decreases when battery voltage is low.
- Ensure batteries are inserted with the correct polarity (+ and -). Incorrect polarity can short-circuit the battery terminals. There is a risk of burns from contact with leaking or damaged batteries.
- Remove the battery when it's depleted or if the device will not be used for an extended period.
- For optimal performance, we recommend using our certified batteries, available at Eesens.com.
- Follow the battery manufacturer's usage and disposal guidelines. Improper use or disposal may cause damage to the device or overheating.

Water-resistant instructions

- Use the supplied tool to securely screw the alarm device in place.

- Do not remove the silicone ring.
- The controller is rain-resistant, and the device is resistant to water splashes. However, do not expose it to water for extended periods.
- If the device is exposed to water, dry it thoroughly before opening the cover.

Extended wireless instructions

- The wireless range can be affected by environmental factors such as walls, metal, water, living beings, or other wireless devices.
- To maximize the range, place the controller in an open area, away from metal, living beings, walls, or floors.
- A low battery will reduce the wireless range. Replace the batteries as soon as you receive a low battery notification.

Open and assembly instructions

- **Open** the top cover of the alarm device by using your finger to lift through the designated slot.

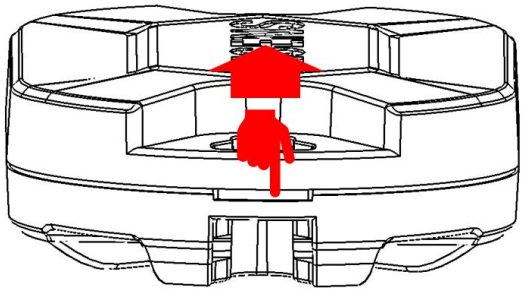

- Assemble the top cover by aligning and pushing the top and bottom covers together. When assembled correctly, you will hear two clicks.

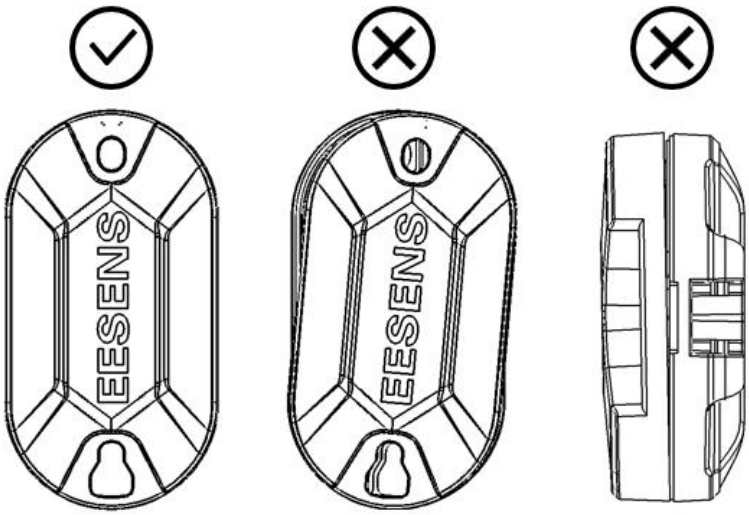

FCC WARNING

This device complies with part 15 of the FCC Rules. Operation is subject to the following two conditions: (1) This device may not cause harmful interference, and (2) this device must accept any interference received, including interference that may cause undesired operation.

Note: This equipment has been tested and found to comply with the limits for a Class B digital device, pursuant to part 15 of the FCC Rules. These limits are designed to provide reasonable protection against harmful interference in a residential installation. This equipment generates, uses and can radiate radio frequency energy and, if not installed and used in accordance with the instructions, may cause harmful interference to radio communications. However, there is no guarantee that interference will not occur in a particular installation. If this equipment does cause harmful interference to radio or television reception, which can be determined by turning the equipment off and on, the user is encouraged to try to correct the interference by one or more of the following measures:

—Reorient or relocate the receiving antenna.

—Increase the separation between the equipment and receiver.

—Connect the equipment into an outlet on a circuit different from that to which the receiver is connected.

—Consult the dealer or an experienced radio/TV technician for help.

Note: The Grantee is not responsible for any changes or modifications not expressly approved by the party responsible for compliance. such modifications could void the user's authority to operate the equipment.

The device has been evaluated to meet general RF exposure requirement.

This equipment complies with FCC's RF radiation exposure limits set forth for an uncontrolled environment. This device and its antenna(s) must not be co-located or conjunction with any other antenna or transmitter.