Auto Pet Feeder

Wifi-Mode

USER GUIDE

Please read the user guide before using this product and keep it for future reference.
This product is for household use only.

Safety Instructions:

1.Please ensure that under adult supervison.
2.Do not use the feeder for pets that cannot reach the food tray or have physical disabilities.
3.Do not immerse the base of the device in water, as it may damage the control panel and other electronic components.
4.Do not place any foreign objects in the pet feeder.
5.Do not place canned or wet food inside the feeder.
6.Do not disassemble the device on your own.
7.Do not modify the pet feeder.
8.If the device malfunctions or if any parts are damaged, do not attempt to repair the pet feeder yourself Please contact the dealer for assistance.
9.Always unplug the power cord before not using the product or before cleaning it.
10.If the power plug of this device gets wet, turn off the power from the socket and do not attempt to unplug it.

Attention:

1. Do not let pets chew or swallow any accessories.
2. Do not place the pet feeder in exposed areas. The storage environment should be within a temperature range of -10°C to 40°C.
3. Please use alkaline D batteries for power. Do not use rechargeable batteries.
4. Regularly check the batteries. If you are going on a long trip or business trip, be sure to replace the batteries.
5. Do not lift the pet feeder directly with the lid, food container, or food tray. Use both hands to lift the base and keep the device in an upright position.
6. Only suitable for dry food with a diameter of 2-12 millimeters. Larger food may get stuck or block the food outlet.
7. Please read and comply with all important instructions listed on the pet feeder and its packaging.

Product Diagram

Front View

1. Food container lid
2. Desiccant Box
3. Food container
4. Control panel
5. LED light prompt
6. Food outlet
7. Main body
8. Food tray

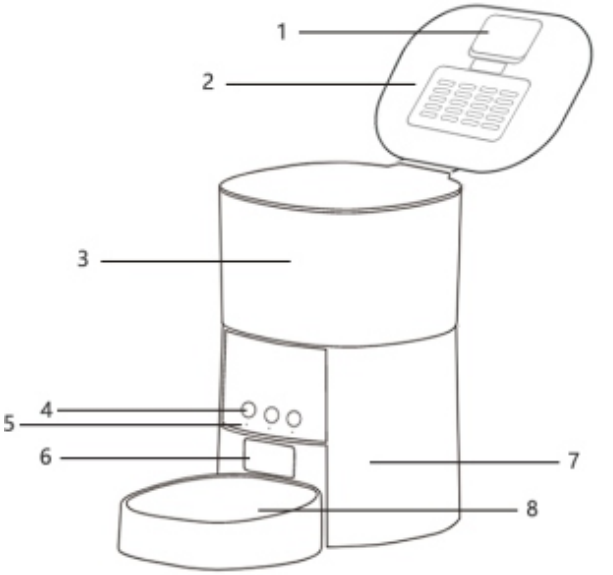

Bottom View

9. Type-C power port
10. Battery compartment
11. Speaker

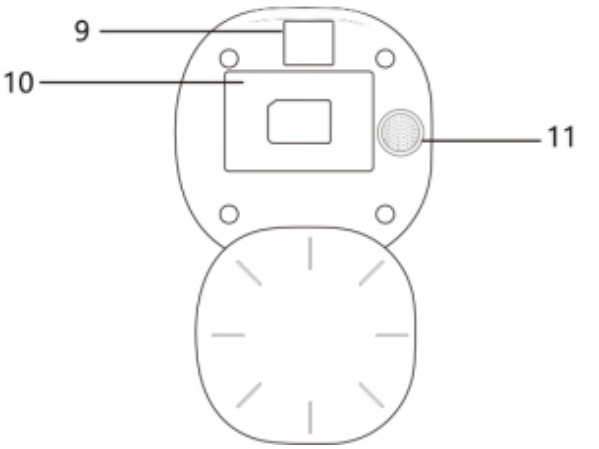

Product Specifications	
Capacity	4L
Input	DC 5V/1A
Dual Power	Type-C/3 cell D Batteries
Supported systems	iOS and Android
Programmable	1-12 portions;10 meals per day
Recommended kibble size	2-12mm Dry Food
Dimensions	L32*W20*H30

User Manual:

1. Assembling the Feeder:

*Take out the feeder from the box and packaging.

*Place the feeder within 10 meters of the router.

*Attach the food tray to the base of the feeder.

*Place the desiccant in the desiccant box above the lid.

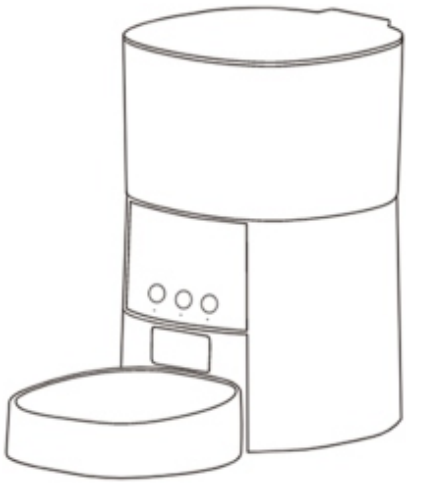

2. Power Connection:

*Plug the 5V/1A power adapter into a wall socket and connect it to the device.

*Open the battery compartment at the bottom of the device and install 3 D alkaline batteries (not included) for backup in case of power failure.

*The Red and White indicator lights will turn on, indicating that the feeder is powered.

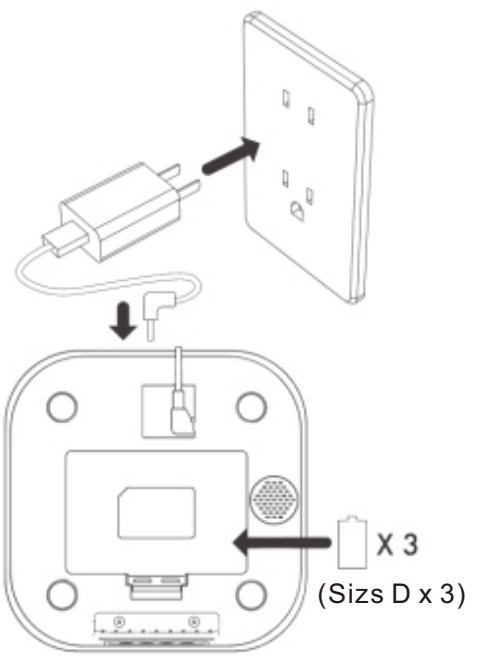

3. Pouring Dry Pet Food:

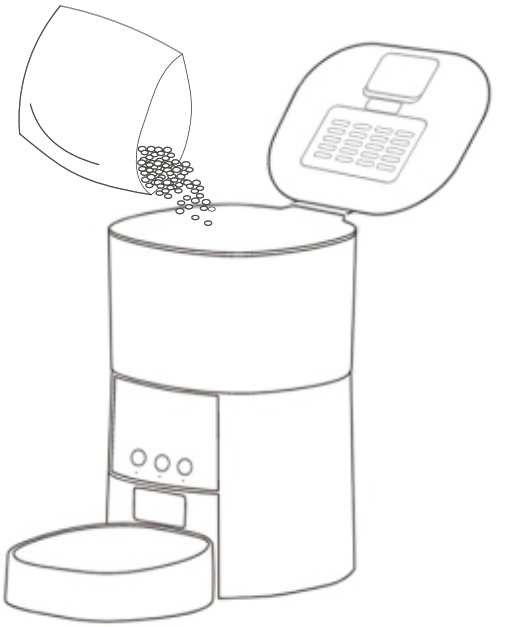

Pour an appropriate amount of dry pet food into the food container and cover it with the lid.

Note:
1) Do not use canned or wet pet food.
2) Recommended pet food size range is 2-12 millimeters.

4. Button Instructions:

(1). Operation Interface

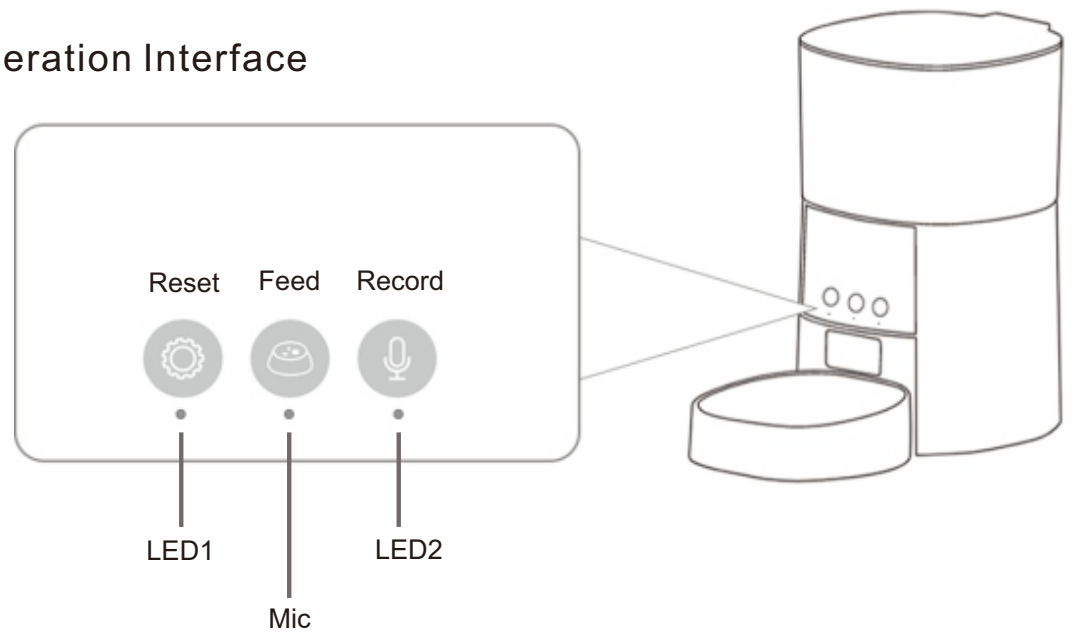

* LED1 (White Light):

1. Blinking: Waiting for network connection.
2. Solid: Network connection successful.

* LED2 (Red Light):

1. Blinking: Limit switch detection abnormality (motor does not rotate).
2. Lock/Unlock: Flashing twice.
3. Solid: Powered by dry batteries.

Made in China

(2). Button Quick Guide

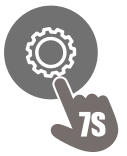 Reset	Press and hold for 7 seconds and the device resets after hearing "beep beep", and the device enters the state of waiting for networking.
 Manual Feeding	In the unlocked state, press the feed button to dispense a portion of food. Note: The feeding schedule will not be affected.
 Lock/Unlock Button	Press and hold the lock/unlock button for 6 seconds. The red indicator light will flash twice to lock the button. Press and hold it for another 6 seconds, and the red indicator light will flash twice to unlock it. Note: * When the button is locked, the feed button will not function. Unlock the button to use it normally. * Locking the button does not affect the operation through the mobile app.
 Recording Feeding Voice	Press and hold the record button for 3 seconds until you hear a "beep" sound to start recording. The recording time should not exceed 10 seconds. Release the button and you will hear two "beep beep" sounds, indicating that the recording has been saved. You can press the record button to listen to the recorded voice. Repeat this process each time to modify your recording. Note: * The voice will play only when there is a recording. * The food will be dispensed and the recorded voice will play at the scheduled feeding time.

Connect to App:

1. Scan the QR code to download the app, follow the app guide to register, and log in.

OR

Search "Tuya Smart" in

App Store/Google Play Store.

2. Make sure the device is powered on, your phone is enable Bluetooth and connect to Wi-Fi (2.4GHz) .
   Enter the app homepage and wait for the device to be discovered and added.

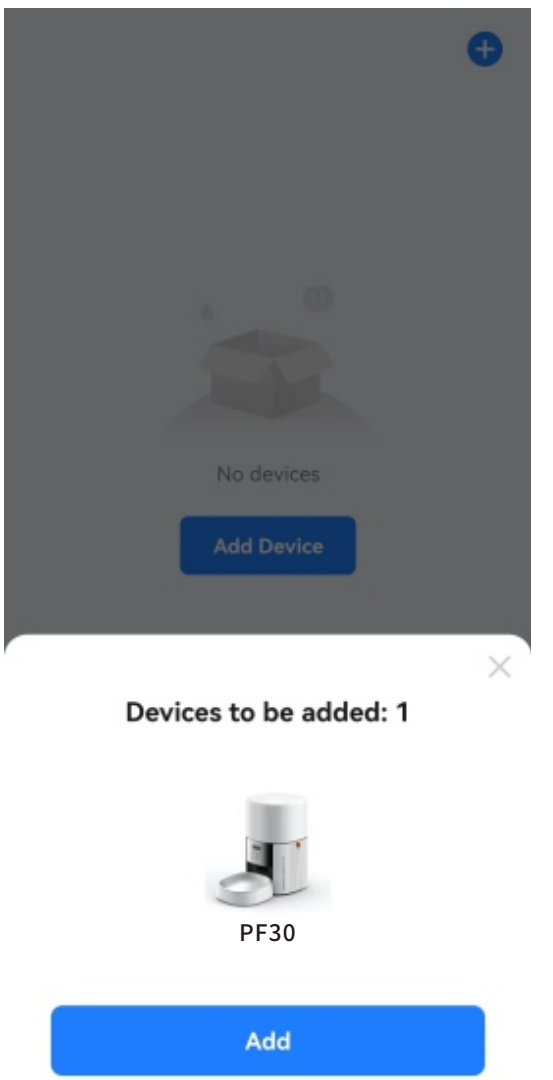

3. Enter your Wi-Fi password and click "Next" to proceed with the network configuration.

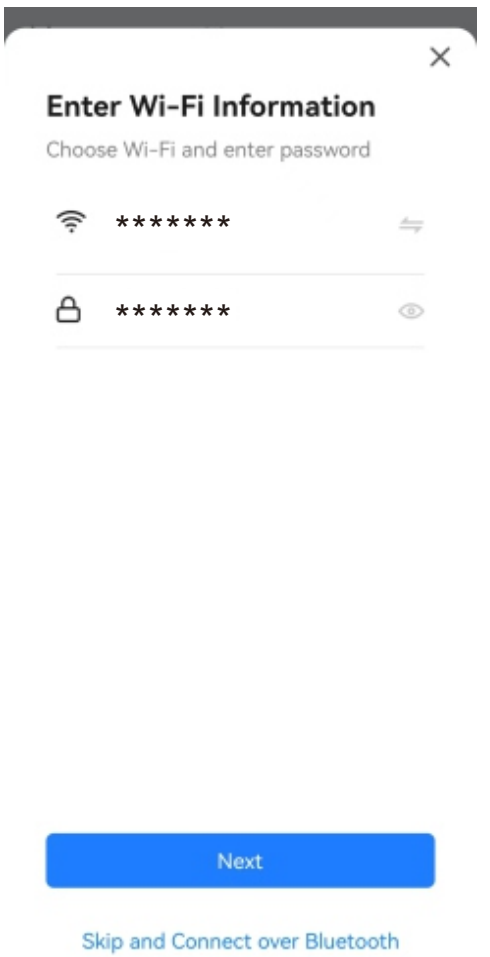

4. After successful configuration, you can customize the device name and click "Finish".

*Turn off Bluetooth after successful pairing.

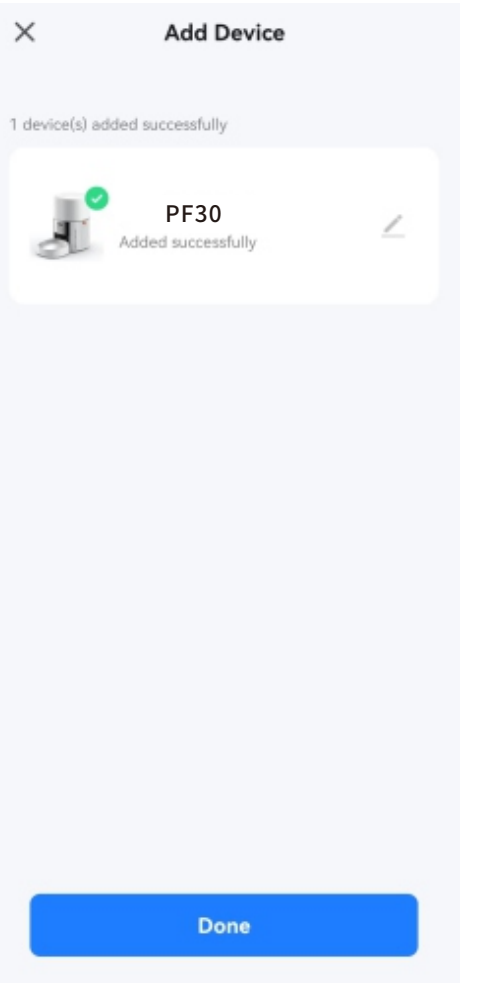

5. Select the desired number of portions for manual feeding. Swipe left or right to adjust the portion. You can dispense up to 12 portions in one meal.

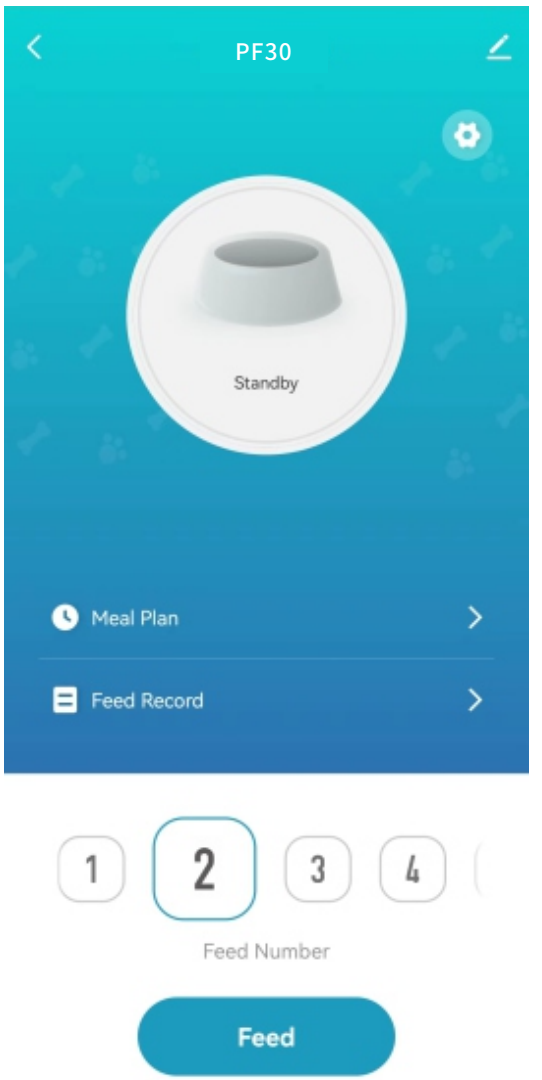

6. Go to the feeding schedule page, add a timed plan, select any time from Monday to Sunday, choose the number of portions, and save it.

Can set up to 10 schedules.

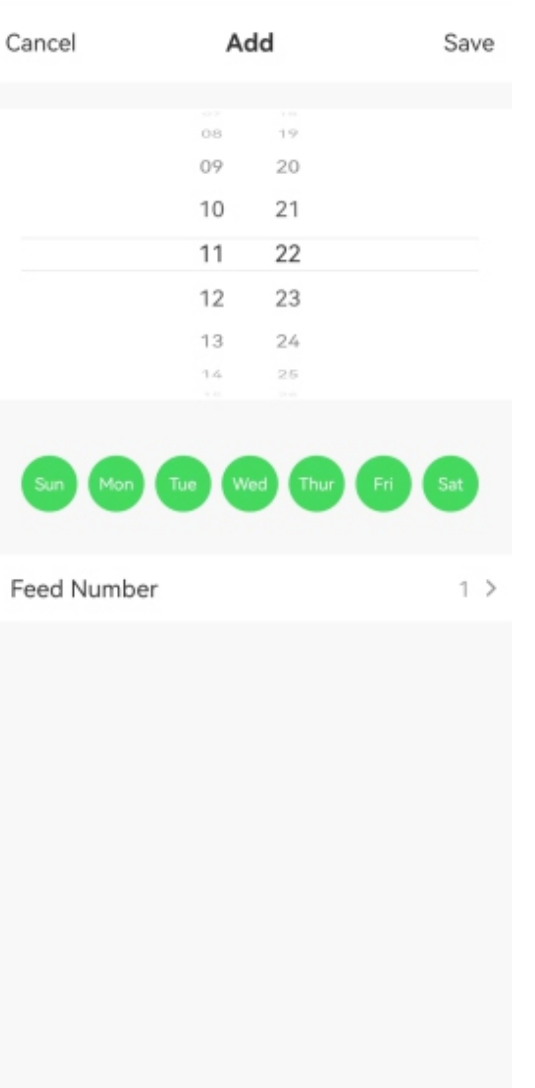

Cleaning and Maintenance:

After unlocking the latches on both sides of the food container, lift it up with force to detach it for cleaning.

For the health of your pet, it is recommended to clean the feeder regularly.

When it becomes dirty and there is a lot of loose food in the food compartment, you can remove the food cover for cleaning.

Use a soft damp cloth to clean the base of the feeder, including the control panel. Do not wet this part, and avoid rinsing it directly with water.

It is recommended to replace the desiccant once a month.

Packing List:

After opening the product packaging, please check if the pet feeder is intact and compare it with the checklist to confirm if all the accessories are complete.

Pet feeder unit *1

Power adapter *1

Power cable *1

User guide *1

Desiccant*2

Troubleshooting Guide:

Problem	Solve a problem
Configuration Issues	*Reset the feeder and use 2.4GHz Wi-Fi hotspot. *Double-check that the entered Wi-Fi password is correct. Incorrect passwords will result in unsuccessful configuration.
Feeder Dispensing Issues	Check if there is an excessive amount of food in the food tray and if the food passage is blocked. Regularly clean the food outlet and food passage. If using battery power, check if the batteries are depleted.
Feeder Shows Offline	Check the distance between the feeder and the router in your home. It should not exceed a range of 10 meters, and there should be no walls obstructing the Wi-Fi signal, as weak signals can cause the product to go offline.
No Response on Powering On	First, check if the power adapter is properly plugged in. If it is plugged in correctly and the indicator light does not turn on, check if the power adapter and power cord are loose or damaged. If the issue persists, please contact customer service for assistance.

FCC Warnning:

This equipment has been tested and found to comply with the limits for a Class B digital device, pursuant to part 15 of the FCC Rules. These limits are designed to provide reasonable protection againstharmful interference in a residential installation. This equipment generates, uses and can radiateradio frequency energy and, if not installed and used in accordance with the instructions, maycause harmful interference to radio communications. However, there is no guarantee thatinterference will not occur in a particular installation. If this equipment does cause harmfulinterference to radio or television reception, which can be determined by turning the equipmentoff and on, the user is encouraged to try to correct the interference by one or more of thefollowing measures:

- Reorient or relocate the receiving antenna.
- Increase the separation between the equipment and receiver.
- Connect the equipment into an outlet on a circuit different from that to which the receiver is connected.
- Consult the dealer or an experienced radio/TV technician for help.

Caution: Any changes or modifications to this device not explicitly approved by manufacturer could void your authority to operate this equipment.

This device complies with part 15 of the FCC Rules. Operation is subject to the following two conditions:

(1)This device may not cause harmful interference, and (2) this device must accept any interference received, including interference that may cause undesired operation.

This equipment complies with FCC radiation exposure limits set forth for an uncontrolled environment. This equipment should be installed and operated with minimum distance 20cm between the radiator and your body.

ISED Statement

- English: This device contains licence-exempt transmitter(s)/receiver(s) that comply with Innovation, Science and Economic Development Canada's licence-exempt RSS(s). Operation is subject to the following two conditions:

(1) This device may not cause interference.

(2) This device must accept any interference, including interference that may cause undesired operation of the device.

- French:Cet appareil contient des émetteurs/récepteurs exempts de licence qui sont conformes aux CNR exempts de licence d'Innovation, Sciences et Développement économique Canada. Le fonctionnement est soumis aux deux conditions suivantes :

(1) Cet appareil ne doit pas causer d'interférences.

(2) Cet appareil doit accepter toute interférence, y compris les interférences susceptibles de provoquer un fonctionnement indésirable de l'appareil.

This device meets the exemption from the routine evaluation limits in section 2.5 of RSS 102 and compliance with RSS 102 RF exposure, users can obtain Canadian information on RF exposure and compliance.

cet appareil est conforme à l'exemption des limites d'évaluation courante dans la section 2.5 du cnr - 102 et conformité avec rss 102 de l'exposition aux rf, les utilisateurs peuvent obtenir des données canadiennes sur l'exposition aux champs rf et la conformité.

This equipment complies with Canada radiation exposure limits set forth for an uncontrolled environment.

This equipment should be installed and operated with minimum distance 20cm between the radiator & your body.

Cet équipement est conforme Canada limites d'exposition aux radiations dans un environnement non contrôlé.

Cet équipement doit être installé et utilisé avec une distance minimale de 20 cm entre le radiateur et votre corps.