Surface Roughness Tester

Instruction manual

AMTAST USA INC

CONTENT

1 Roughness tester overview 3
1.1 Features of instrument 3
1.2 Measurement principle 4
1.3 Name of each part 4
1.4 Buttons define 6
1.5 Battery Charging 6
1.6 Connection method of sensor and drive unit 7
1.7 Connection method of Drive unit and Main Display unit 8
1.8 Extension cable usage 9
2 Measuring Operation 11
2.1 Preparation for Measurement 11
2.2 Turning On/Off 11
2.3 Pickup Position 12
2.4 Start measurement 12
2.5 Measurement result display 12
2.6 Print measurement results 13
2.7 Storage measurement results 13
2.8 Setting Main Menu 14
2.9 System Setting 15
2.9.1 Master results display and slave results display 15
2.9.2 BPS rate setting 16
2.9.3 Auto shutdown 16
2.9.4 Bluetooth mode 16
2.9.5 Bluetooth Power 16
2.9.6 Touch Screen calibration 16
2.9.7 Rpc Details settings 17
2.9.8 Date and Time settings 17
2.9.9 LCD Display brightness settings 18
2.9.10 Reset factory settings 18
2.9.11 Format memory 18
2.10 Measuring Condition Settings 19
2.11 Record Management 20
2.12 Software Information 20
2.13 Parameter calibration 21
2.14 Print Function setup 21
2.15 Mobile APP 23
2.16 Dataview of software 26
3 Optional Accessories For Drive Unit 29
3.1 Adjustable height support feet 29
3.2 Magnetic stand adapter 29
3.3 Height gauge adapter 29
3.4 Measurement Stand 30
3.5 Extension rod (50mm) 31
3.6 Small hole Sensor 31

3.7 CURVED SURFACE SENSOR 32
3.7.1 CURVED SURFACE SENSOR OPERATION METHOD 32
3.8 EXTRA SMALL HOLE SENSOR 33
3.9 DEEP GROOVE SENSOR 33
3.10 NOSEPIECE FOR FLAT SURFACE 34
3.11 NOSEPIECE FOR CYLINDRICAL SURFACE 35
3.12 MINIATURE THERMAL PRINTER 35
4 TECHNICAL PARAMETER AND FEATURES 36
4.1 TECHNICAL PARAMETER 36
4.2 MEASURING RANGE 37
5 GENERAL MAINTENANCE 37
5.1 SENSOR 37
5.2 MAIN DISPLAY UNIT 37
5.3 BATTERY 37
5.4 ROUGHNESS STANDARD SPECIMEN 38
5.5 TROUBLESHOOTING 38
6 REFERENCES 39
6.1 TERMS 39
6.2 PARAMETERS DEFINITIONS 40
6.3 RECOMMENDED TABLE OF THE SAMPLING LENGTH 46

1 Roughness tester overview

The surfaces roughness tester is a small handheld instrument, for shop floor use and mobile measure, it operation simple, function overall, measure fast, accuracy stability, take convenience. This tester applies to production site and can be used to measure surface roughness of various machinery-processed parts. This tester is capable of evaluating surface textures with a variety of parameters according to various international standard. The measurement results are displayed digital/graphically on the color graphic LCD display, And output to the printer.

1.1 Features of instrument

- Composite structure of main display unit ,driver unit and Sensor. Electromechanical integration design, small size, light weight, easy to operation;
- Support Bluetooth printing and mobile APP wireless operation.
- Multi parameters:Ra,Rz,Rq,Rt,Rp,Rv,R3z,R3y,Rz(JIS),Rs,Rsk,Rsm,Rku,Rc,Ry,Rmax,Rmr; RPc、Rk、Rpk、Rvk、Mr1、Mr2
- In addition to calculation results, the tester can display primary profiles and assessed roughness profiles and load curves.
- 320μm Large measurement range;
- The 3.5-inch color graphic LCD provides excellent readability and an intuitive display that is easy to negotiate. The LCD of 480*320 dot matrix includes a adjustable backlight for improved visibility in dark environments. Wide angle of view;
- DSP chip control and data processing, high speed, low power consumption;
- Display full information, intuitive and graphical displays all parameters;
- The tester Complies with the following standards: ISO4287,ANSI b46.1,DIN4768,JISb601
- 4 Profile Filter: Gauss RC PC-RC D-P
- Built-in 3000mAh lithium-ion rechargeable battery and control circuit, high capacity, no memory effect;
- The tester can graphically display the remaining battery power.
- The tester can be animated to show that it is charging and filling., the operator can readily understand the level of charge
- Can work more than 50 hours while the power is enough;
- Large capacity data storage, can store 100 item of raw data and measured profile;
- Real-time clock setting and display for easy data recording and storage;
- With automatic sleep, automatic shutdown power-saving features;
- Reliable circuit and software design of prevent the motor stuck;
- Instrument can display a variety of information tips and instructions. For example Measurement result display, the menu prompts and error messages;
- Metal case design for driver unit, rugged, compact, portable, high reliability；
- Can connected to the computer and printer；
- All parameters can be printed or print any of the parameters which set by the user；
- Optional curved surface pickup sensor, holes sensor, minuteness holes sensor, measurement stand, Sheath of sensor, extension rod, printer and analysis software；

1.2 Measurement principle

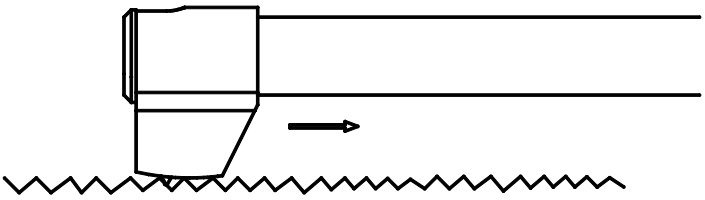

When measuring roughness of part surface, the pickup is placed on the surface of the part and then tracing the surface at constant rate. The pickup acquires the surface roughness by the sharp stylus in pickup. The roughness causes displacement of pickup which results in change of inductive value of induction coils thus generate analogue signal which is in proportion to surface roughness at output end of phase-sensitive rectifier. This signal enters data collection system after amplification and level conversion. After that, those collected data are processed with digital filtering and parameter calculation by DSP chip and the measuring result can be read on LCD, printed through printer and communicated with PC.

1.3 Name of each part

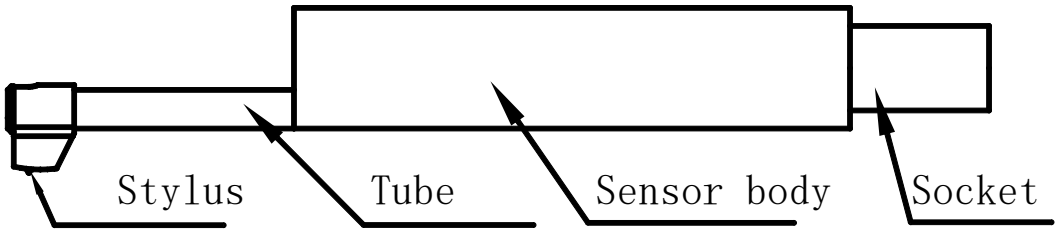

Sensor

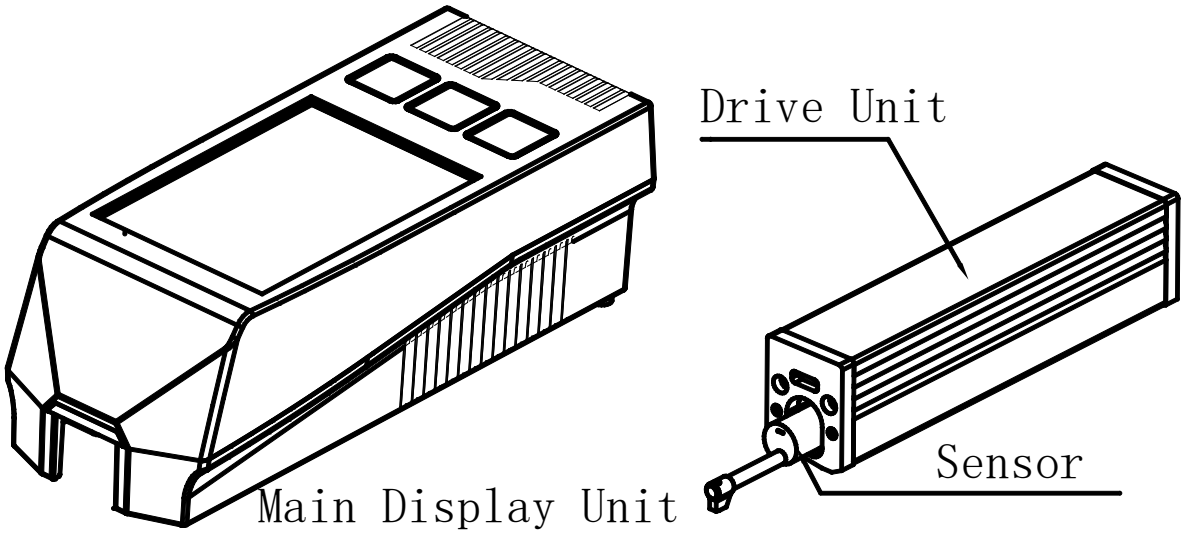

Front view

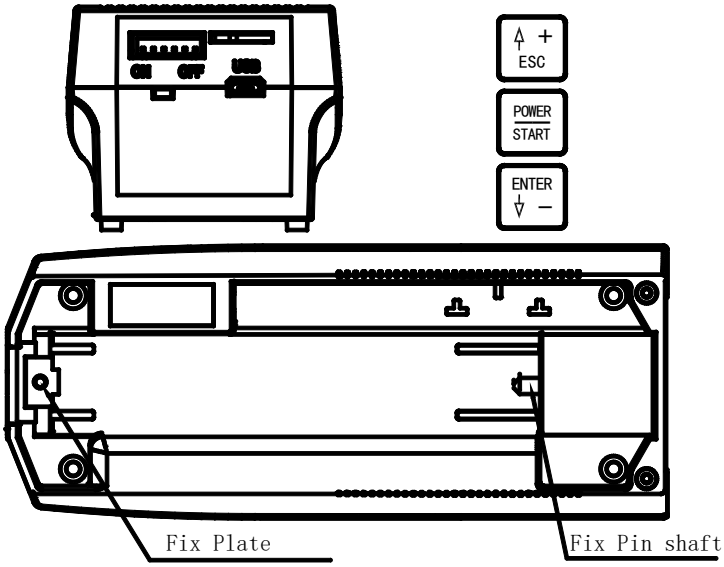

Power switch is a total power switch on the instrument.

Turned off when not in use for a long time.

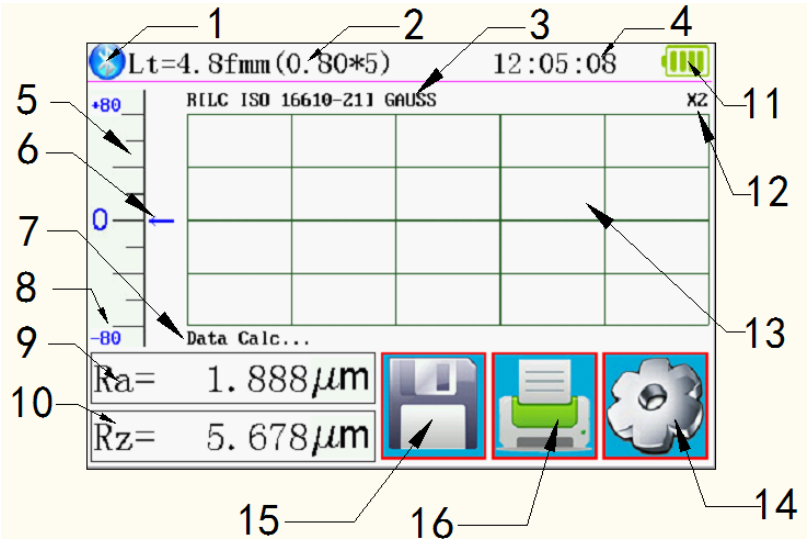

1 Bluetooth Mark; 2 Assess length; 3 Filter; 4 Working Time; 5 Start Touch key area; 6 Pickup position; 7 Hint information area; 8 Range; 9 Master results display; 10 Slave results display; 11 Battery level; 12 Profile scale; 13 Profile display area; 14 Menu touch key; 15 Save touch key; 16 Print touch key

1.4 Buttons define

Power key: Press and hold 2 seconds On/Off tester

Start measurement key: Start the instrument to measuring

Up /Add key: Increase the value

Cancel / Exit key: Used to exit the menu and unset

Enter key: Confirmation setting

Down / decrease key: decreased the value

touch key of Hidden

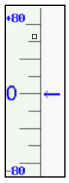

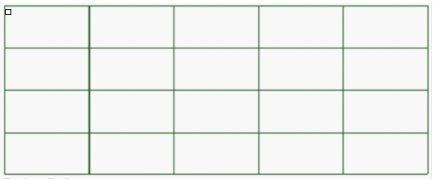

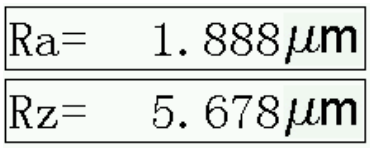

Start touch key Profile zoom touch key Multi results and Profile touch key

1.5 Battery Charging

When battery voltage is too low (that is, battery voltage symbol display ▭ on screen to prompt low voltage), the instrument should be charged as soon as possible. USB port of the instrument for charging. You can use the built-in power adapter for charging, you can also use computer's USB port for charging. If use the other power adapter for charging, the output voltage should be 5V DC , the current should be greater than 1000mA.

Instrument displays charging animation when charging after full animation ends, the display is full of symbols. Charging time of 5 hours.

This instrument adopts lithium ion chargeable battery without memory effect and charging can be fulfilled at any time without affecting normal operation of the instrument.

When charging, ensure that the instrument side of the power switch is in the ON position

1.6 Connection method of sensor and drive unit

When installing and remove sensors, turn off the power first.

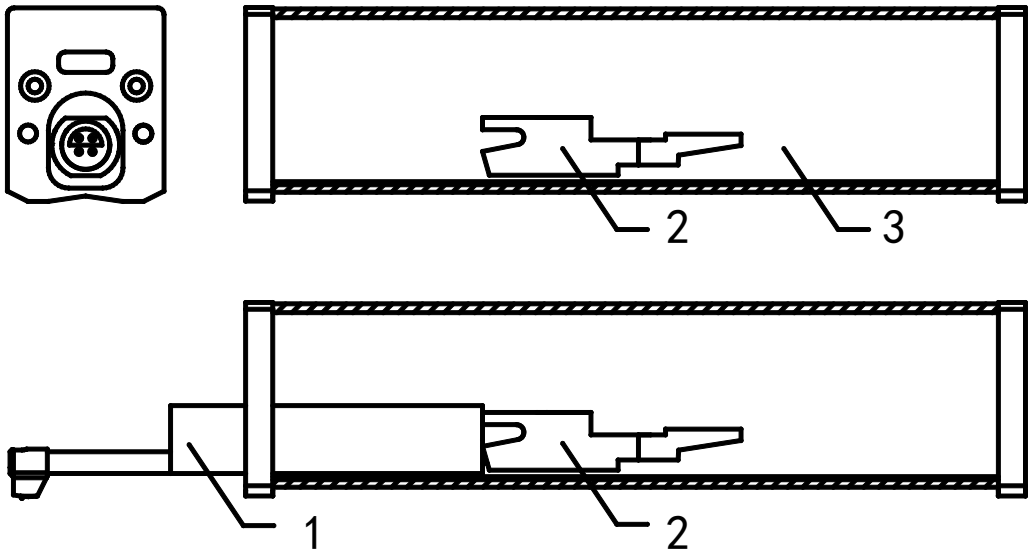

1 sensor 2 Socket of drive unit 3 Drive unit

For installation, hold the main body of sensor with hand, push it into socket at the the drive unit as shown in Figure and then slightly pushed it to the end of the sheath. To remove, hold the main body of sensor or the root of protective sheath with hand and slowly pull it out.

1. Sensor is key part of this tester and great attention.should be paid to it.
2. During installation and remove, the stylus of sensor should not be touched in order. to avoid damage and affecting measurement.
3. Connection of sensor should be reliable during installation.
4. The sensor doesn’t need to be removed when not in use.
5. Calibration is recommended after each new sensor is installed.

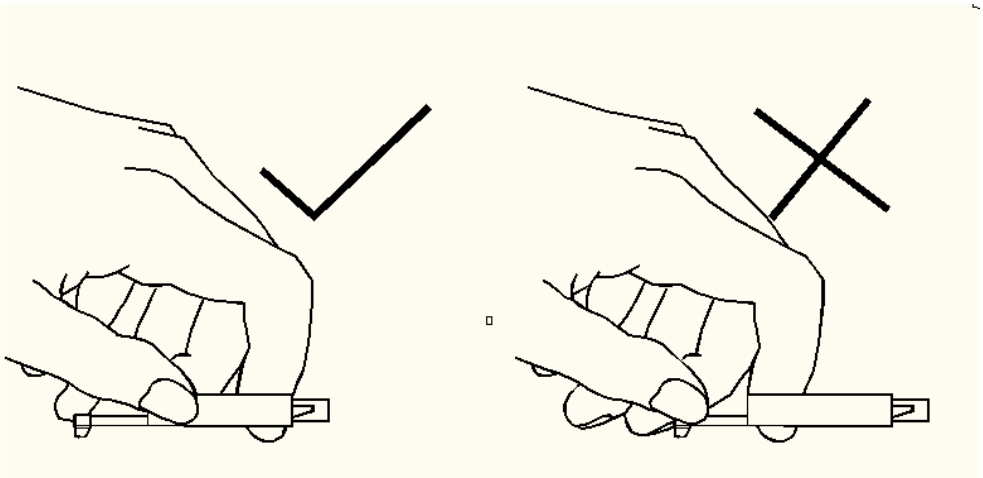

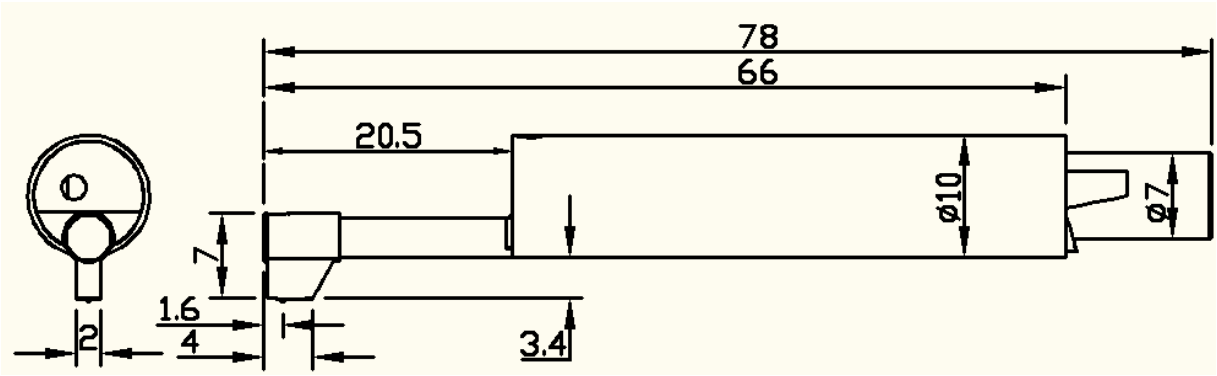

Sensor size view

1.7 Connection method of Drive unit and Main Display unit

Installation method

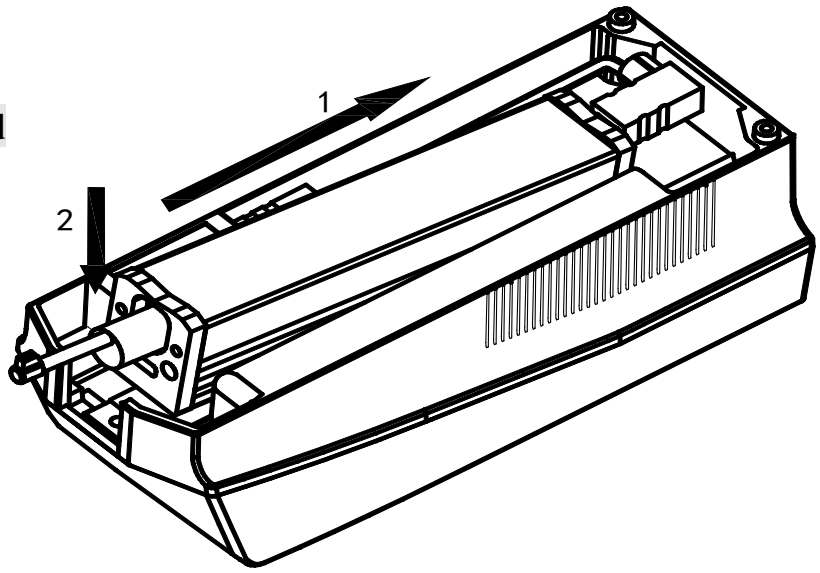

1 The driver unit is embedded into the main display unit according to the direction of arrow 1, so that it is installed on the fixed pin shaft.
2 Press the drive unit in the direction of arrow 1 and down the direction of arrow 2 to install the driver unit on the fixed plate.

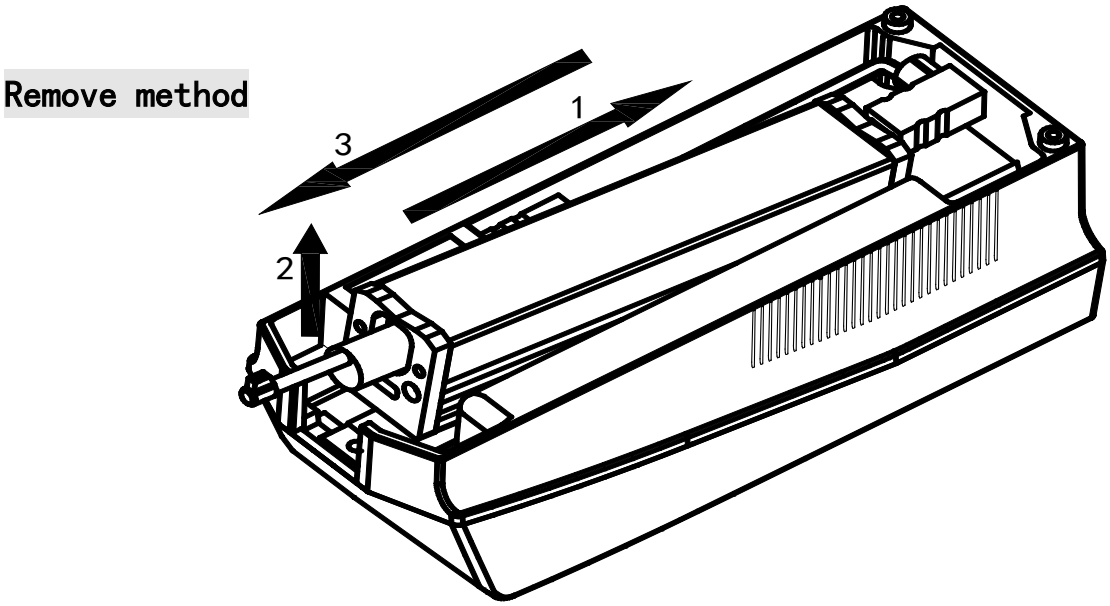

1 Press the driver unit toward arrow 1 and lift it toward arrow 2. Remove the driver unit from the fixed plate.

2 Pull the driver unit in the direction of arrow 3 and take out the drive unit.

1.8 Extension cable usage

If the drive unit is not installed on the main display unit, please connect the main display unit and the drive unit with the extension cable as shown in the following figure before using it.

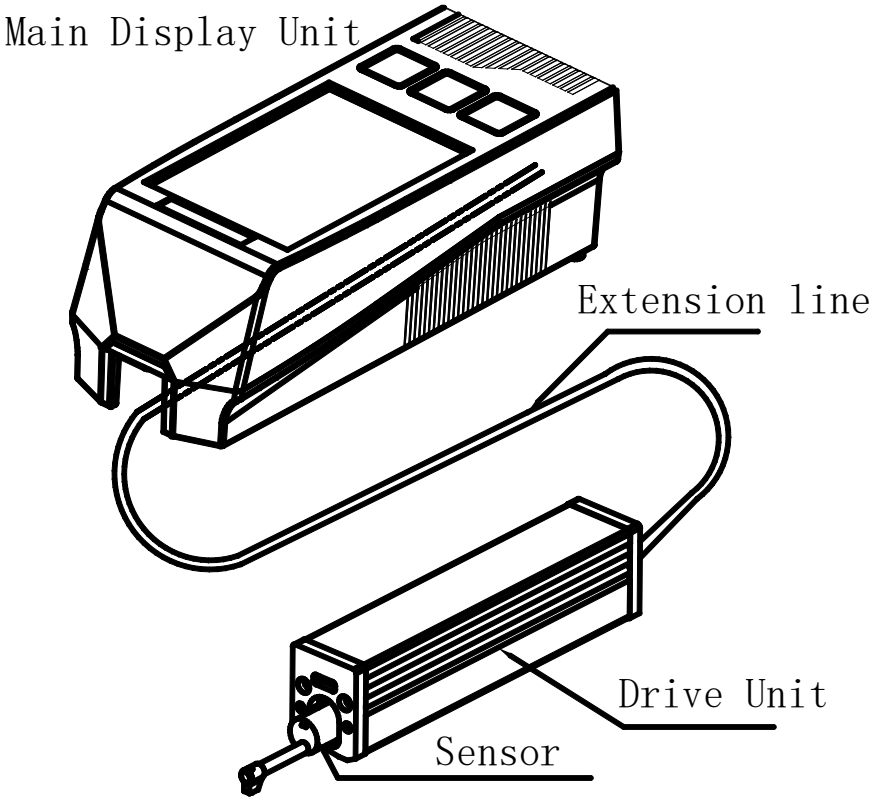

2 Measuring Operation

2.1 Preparation for Measurement

Switch-on to check if battery voltage is normal;
Clear the surface of part to be measured;
Place the instrument correctly, stably and reliably on the surface to be measured;
Trace of the pickup must be vertical to the direction of process line of the measured surface.

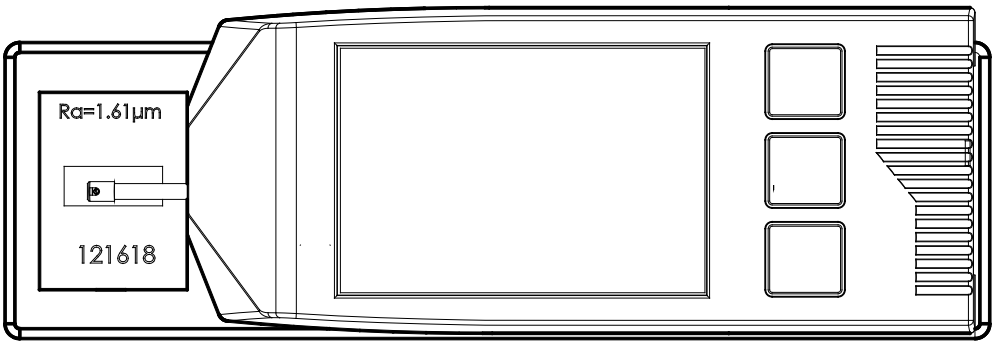

: Correct and standard operation is the premise for accurate measurement result, please make sure to follow it.

2.2 Turning On/Off

ON Press the POWER key to hold 2 seconds after the instrument will automatically boot, boot will display type, name and manufacturer information, and then enter the basic measurement status main display interface.
OFF In any state, press the POWER key to hold 2 seconds after the instrument will be turned off.

Introductions:

1. The next boot will be displayed when the last shutdown set content
2. Startup and shutdown, press and hold the key for about 2 seconds to open the instrument will perform the appropriate action
3. Long time not to use, the instrument should be on the side of the power switch turned off

2.3 Pickup Position

First, view pickup position to determine the location of the sensor. The best location is in the middle position of the range.
Arrow indicates if it is not at zero point. The instrument can also be measured normally.
As long as the entire measurement process does not exceed the set range, it will not affect the measurement results.

2.4 Start measurement

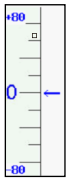

In the main interface display mode,
Press the Start key or Start key touch area to start measuring.
The measurement can be stopped according to ESC.

2.5 Measurement result display

After the measurement, if you need to look at all the measurement results, touch the main and secondary display area will be able to see all the calculation results. The touch profile display area will zoom the profile by 1-2-4-8.

Start key touch area

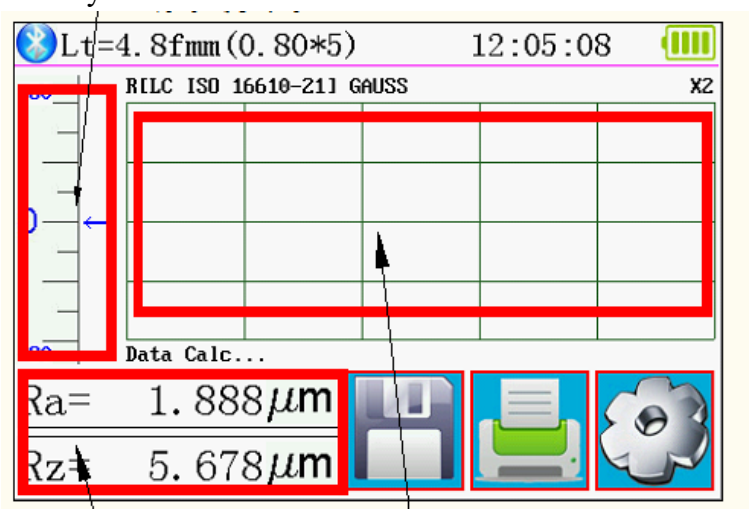

More results touch area Zoom key touch area

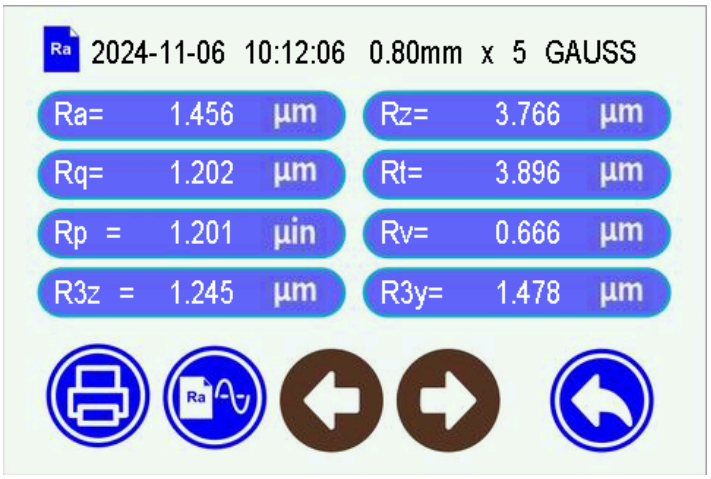

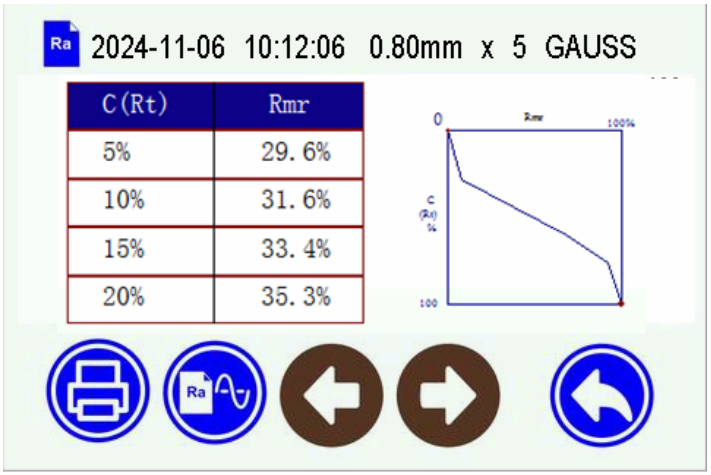

2.6 Print measurement results

The instrument can be connected to the printer. The measurement results will be printed.

After measurement, Press key to print the measured data to a serial printer.
The instrument can set the print output according to the actual requirements of arbitrary parameters choose to print or print all the parameters, how to set the parameters, refer to "Print Settings."

2.7 Storage measurement results

In the main display interface mode, press the key to save the measurement results stored in the instrument memory. Instrument built-in large capacity memory, can store 100 groups of raw data and profile data.
Data storage recording date and time the file name automatically generated according to the last data record is always stored the most recent recording time, the last data record stored recording record number will be 001.

2.8 Touch Screen calibration

When the instrument is manufactured, the touch screen has been calibrated. Generally, calibration is no longer required, but the physical parameters will change over time. If you find that the button is not correct, please calibrate again. Please follow the screen prompts.

2.9 Setting Main Menu

In the main display interface mode, press the key enter main menu.

2.10 System Setting

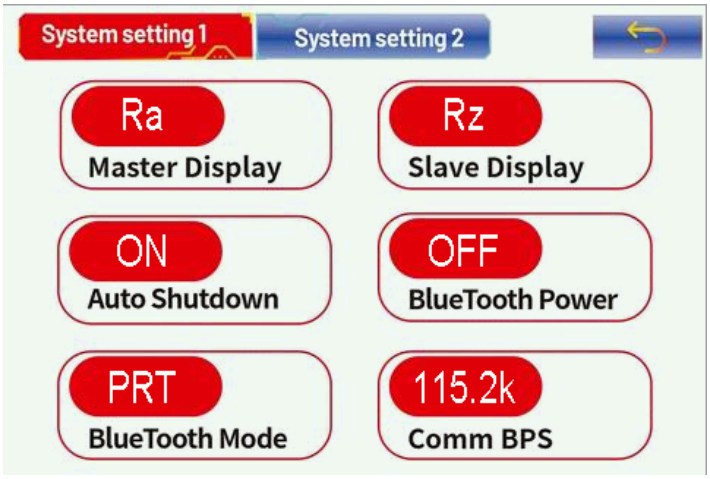

Touch system setting area can pageup system settings.

2.10.1 Master results display and slave results display

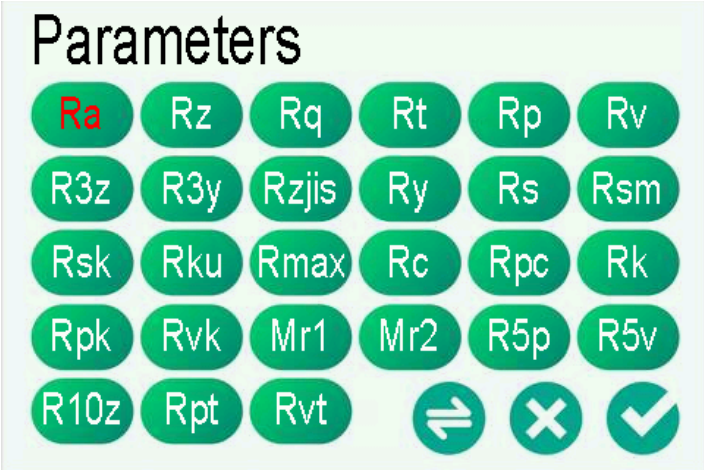

2.10.2 BPS rate setting

The BPS rate of communication between instrument and printer or between instrument and APP of mobile phone.
Default BPS rate 115.2K

2.10.3 Auto shutdown

Set to ON instrument for 600 seconds without operation will be automatically shutdown . When OFF is set, it will work all the time.

2.10.4 Bluetooth mode

There are 2 mode to operate Bluetooth module, print mode and data transmission mode.
Set it to print when Bluetooth printing is needed and to Ctrl when communicating with mobile APP
Bluetooth switch can only be operated when Bluetooth power is off.

2.10.5 Bluetooth Power

Please set the Bluetooth mode first, then turn ON the Bluetooth power, the instrument will automatically set the Bluetooth module as required.
Because of the unnecessary battery capacity loss caused by the long-term opening of the Bluetooth function, the instrument will turn off the Bluetooth power after each boot. If you need to use Bluetooth function, please open it yourself.

2.10.6 Rmr Detail Settings

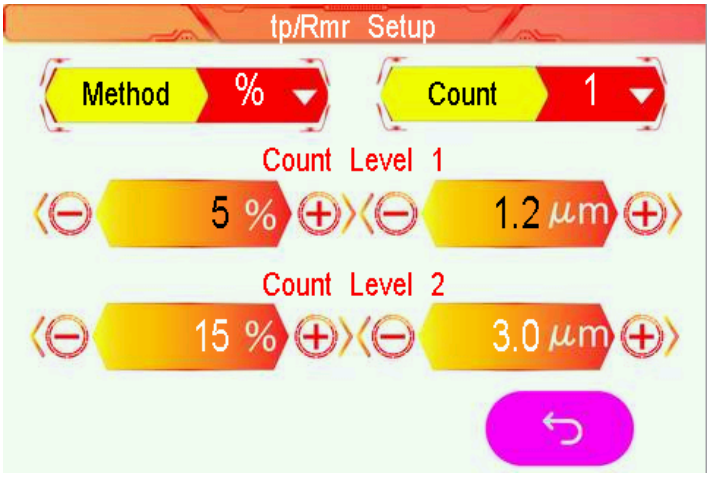

2.10.7 Rpc Details settings

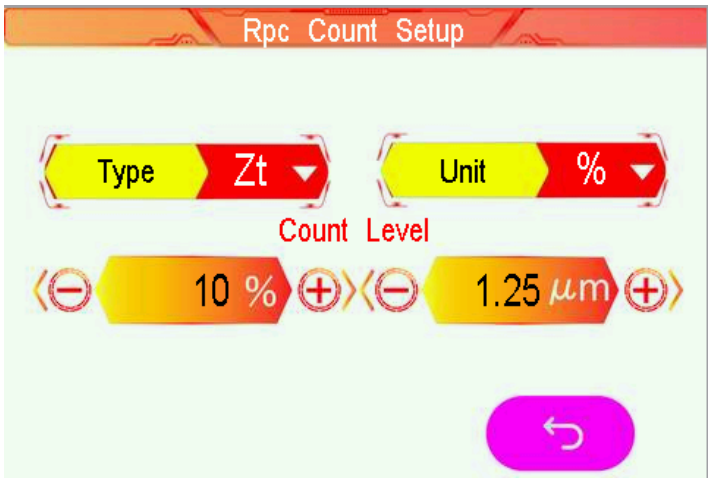

According to user's demand, Rpc-parameter's calculation can be selected from "μm" and "%".

2.10.8 Date and Time settings

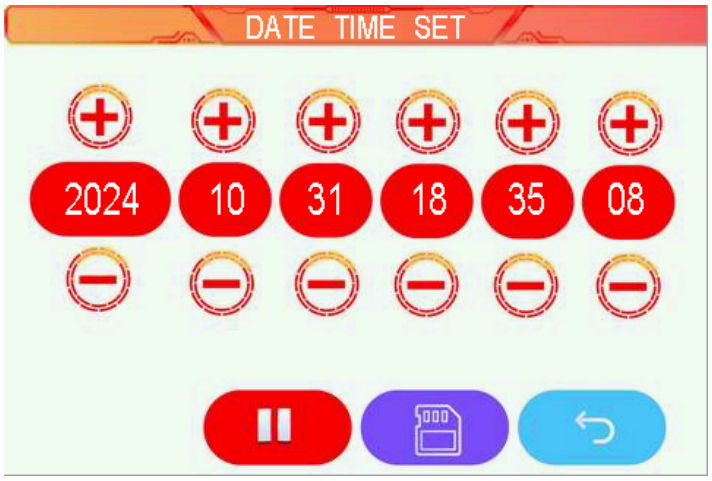

If you want to change the date and time, please press STOP first, after the modification is finished, press START.

2.10.9LCD Display brightness settings

2.10.10 Reset factory settings

2.10.11 Format memory

Data formatting is the deletion of data records. Once formatted, all data will be emptied. Before the data formatting, the instrument has the confirmation prompt information. After the user confirms, the data will not be restored. Please proceed with caution.

Format memory takes about 1 minutes, please do not turn off the power.

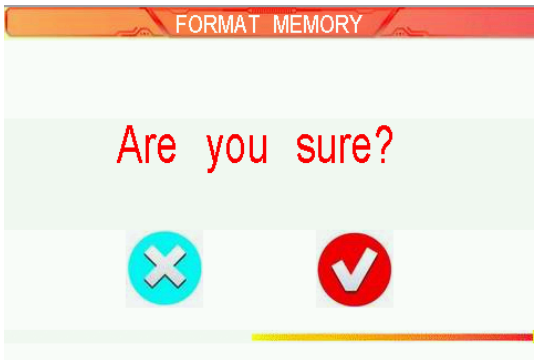

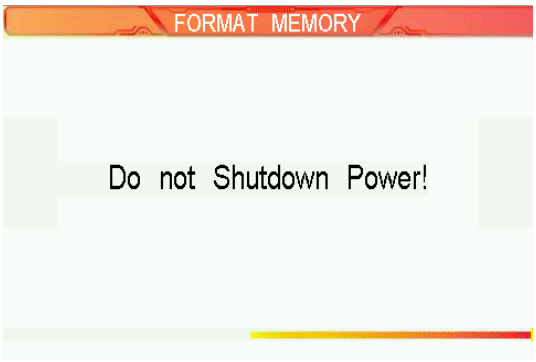

2.11 Measuring Condition Settings

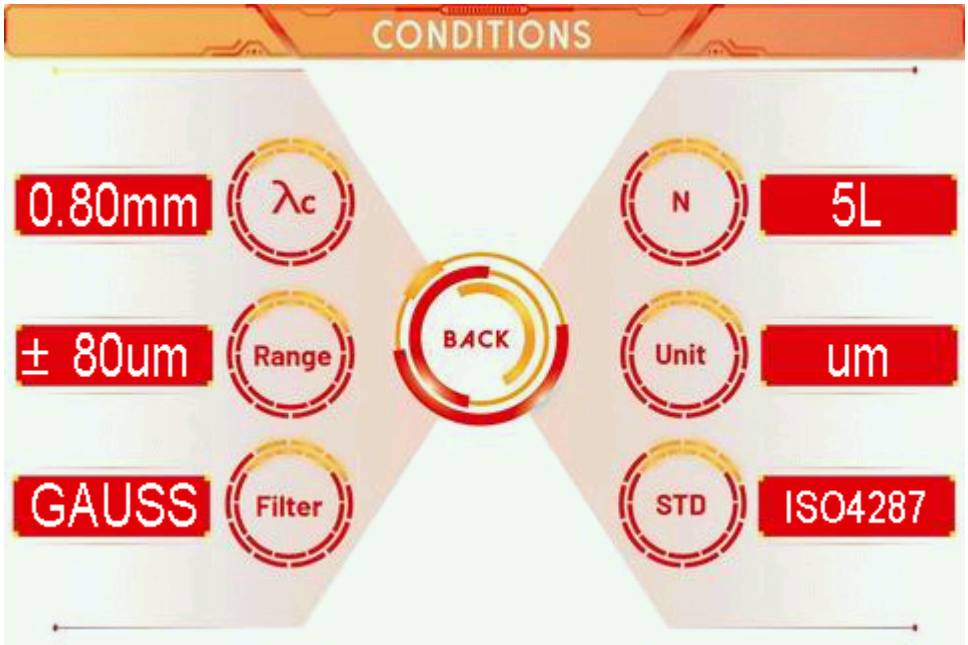

Cut off length λc	0.25mm;0.80mm;2.50mm
Number of Sampling lengths (×N)	1-5
Range	±20μm; ±40μm; ±80μm; ±160μm
Unit	Inch； mm
Filter	RC;PC-RC;GUASS;D-P
STD	ALL,ISO4287,DIN4768, JIS-B601,ANSI-B46, ISO21920

2.12 Record Management

Click on the corresponding record to see the details of the record.

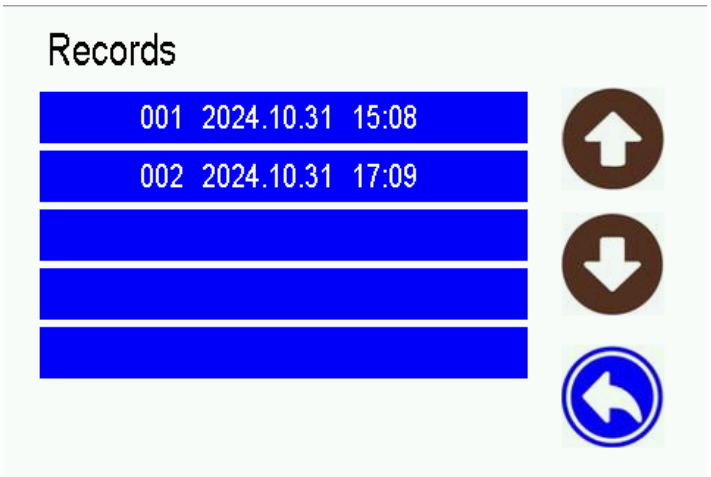

2.13 Software Information

Instruments software and hardware information can help users easily upgrade and maintain the product, unique serial number of the instrument software information items are displayed.

2.14 Parameter calibration

Before measuring, the instrument usually required calibration on standard calibration block. The instrument is configured with a standard calibration block, before measurement, instruments should test on the block. Under normal circumstances, when the difference between the measured value and the block value is in the acceptable range, the measurement value is valid, can be measured directly.

If the measured value and the block value which difference is greater than a accuracy error range of the instrument, or the user require high accuracy, can be used to correct the indication calibration function and improve measurement accuracy. The value of the calibration procedure is as shown.

Illustration is based on a model calibrated 1.63μm steps to calibrate the model for the actual calibration of the nominal value of the set value.

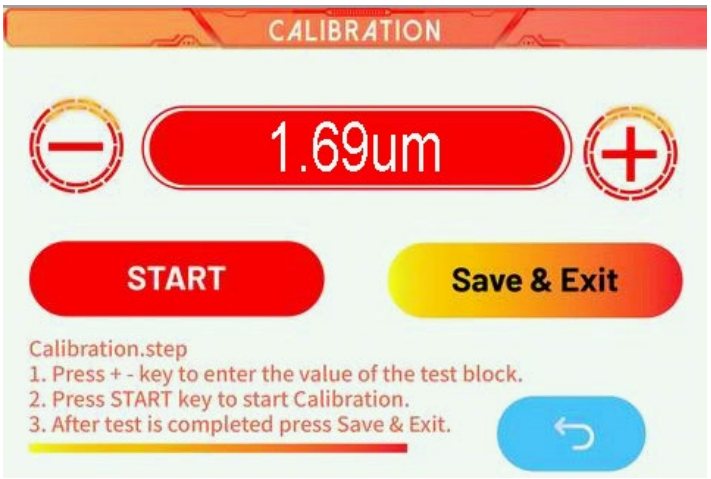

1. Under normal circumstances, the instrument in the factory have been rigorously tested, showing error is much less than ± 10%, in this case, the user is not showing the value of the calibration frequently used functions.
2. After setting the calibration value, you must press the START key for a full measurement, instrument calibration to be valid.
3. New parameters after calibration must be carried out once a complete measurement and press the Save&Exit key is stored in the instrument.
4. Press "Exit"key to return the menu without saving calibration results.

2.15 Print Function setup

The instrument can be tested according to the actual requirements of any parameter selection Print or Print All, the steps shown in Figure.

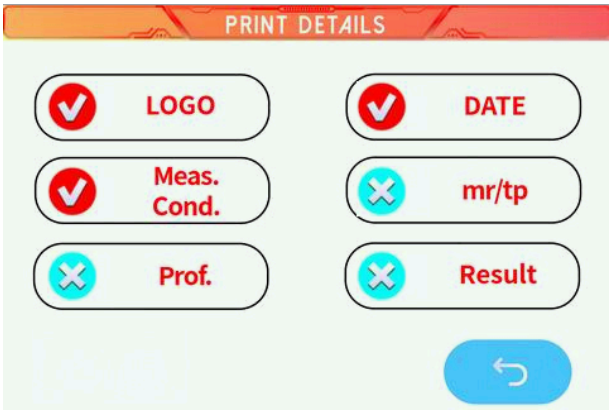

```
************************
Surface Roughness Tester
************************
2013.04.18      11:05:08
Ln = 0.8mmX5
Range = 40um
Filter  = GAUSS

Ra = 1.598um
Rz = 4.275um
Rq = 1.691um
Rt = 5.113um
Rp = 1.966um
Rv = 2.309um
Rs = 0.08mm
R3z = 3.853um
R3y = 4.059um
RzJIS = 3.901um
Rsk = -0.16
Rku = 1.18
Rsm = 0.08mm
0          100%Rmr
```

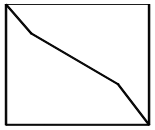

```
100%C(Rt)
C(Rt)          Rmr
 10%            7.2%
 20%           41.8%
 30%           49.8%
 40%           52.1%
 50%           54.2%
 60%           55.9%
 70%           58.6%
 80%           66.5%
 90%           96.6%
```

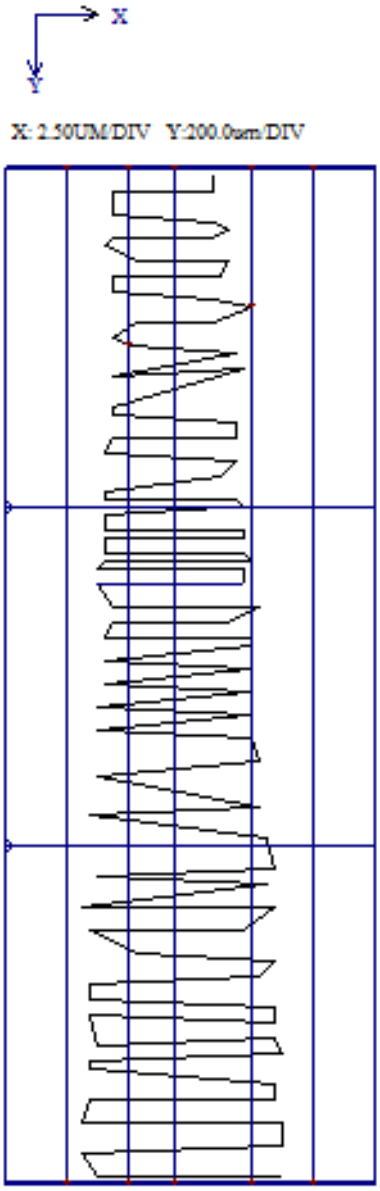

2.16 Mobile APP Use BlueTooth

This instrument supports the wireless Bluetooth function, such as in the high altitude or pipeline operation is inconvenient to directly operate the instrument keys, Bluetooth remote operation function can be used.

This mobile phone APP currently supports Android version 6 or more.

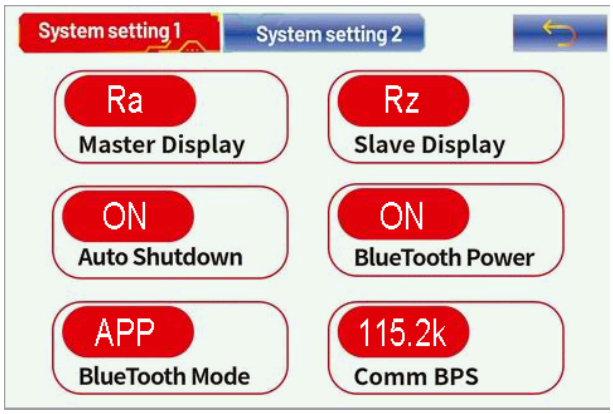

Use mobile phone APP to control the instrument, please set the Bluetooth mode to APP, and turn **ON** the Bluetooth power and BPS **115.2k**

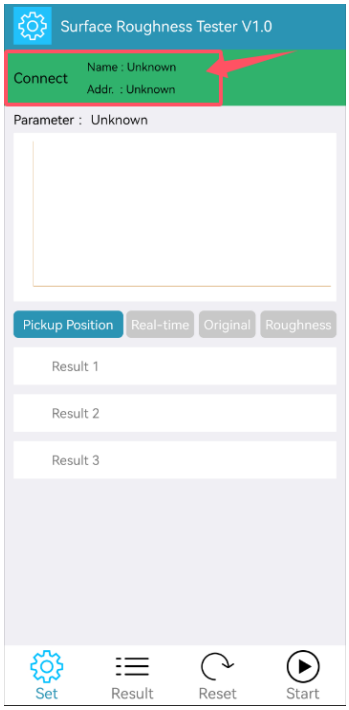

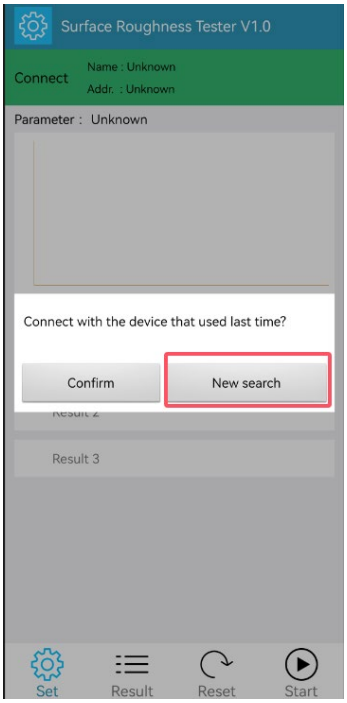

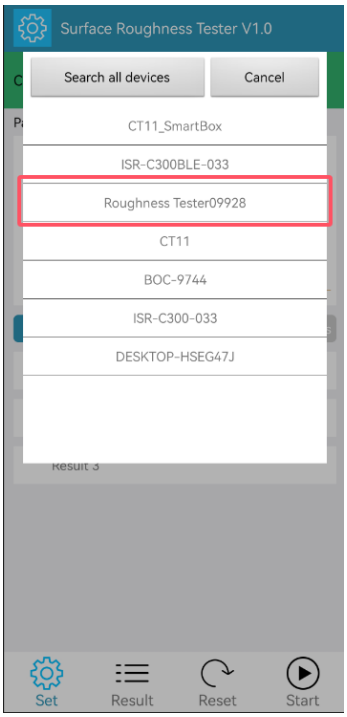

APP connect green area, press any place to connect, select new search for Roughness Tester, connect it

.

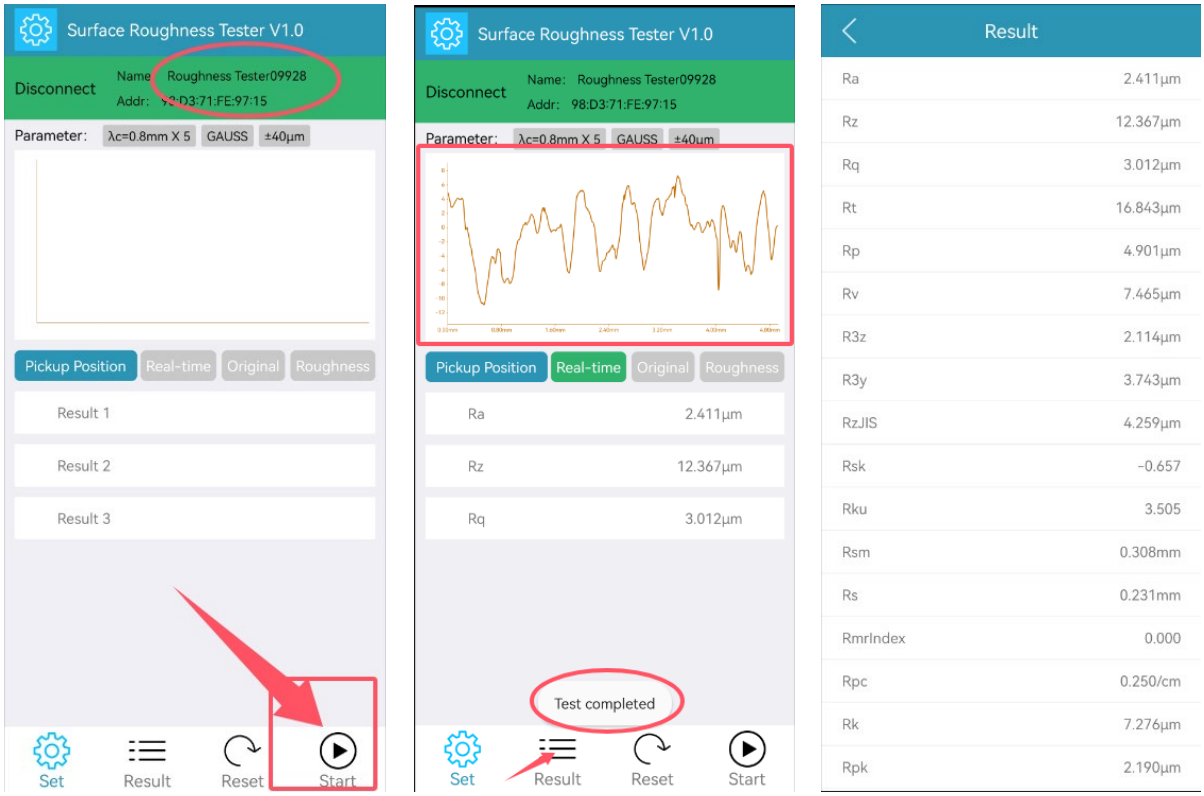

Click the start to take measurements, the wave form and the test result will be shown simultaneously on phone and on tester.

2.17 Print Use BlueTooth

1 Press to go to the main menu, select Print, select options that you want to print

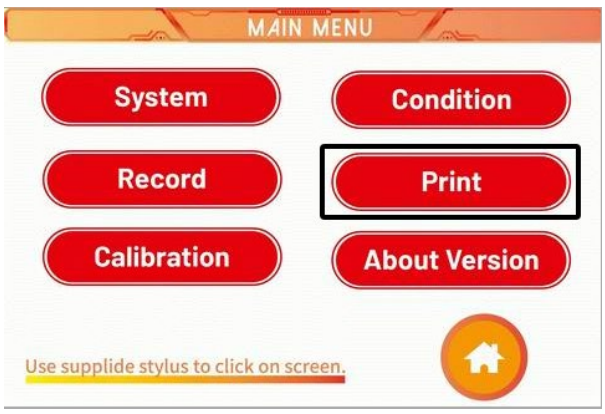

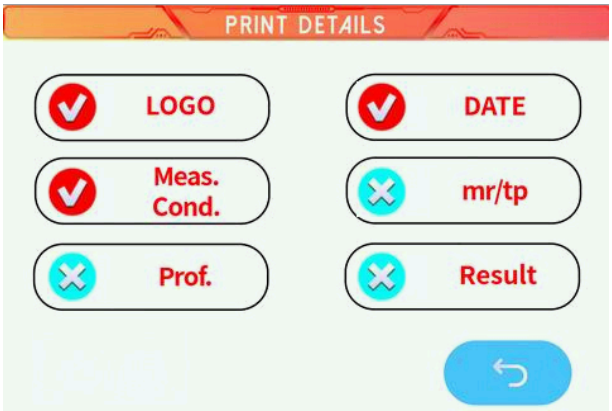

Please set the Bluetooth mode to PRT, and turn **ON** the Bluetooth power and BPS **115.2k**

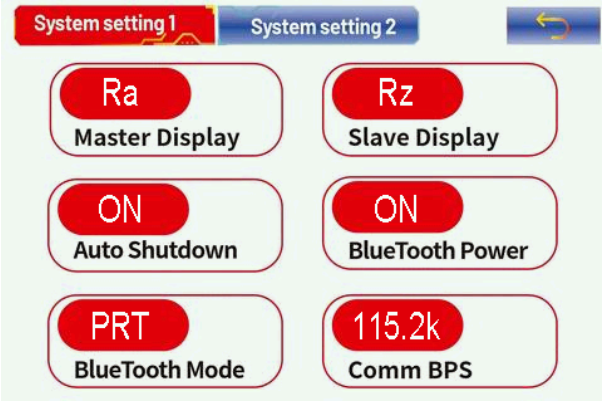
System setting 1
System setting 2
Ra
Master Display
Rz
Slave Display
ON
Auto Shutdown
ON
BlueTooth Power
PRT
BlueTooth Mode
115.2k
Comm BPS

BlueTooth Set
Press waiting!

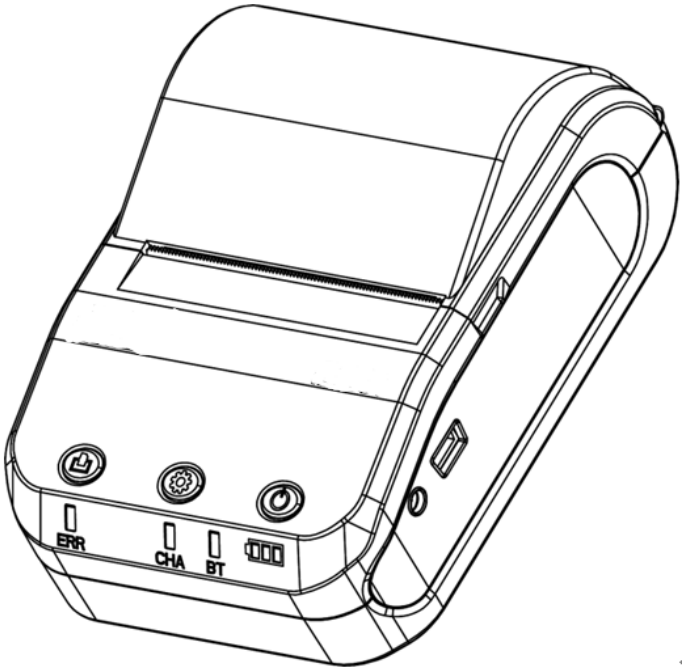
ERR
CHA
BT

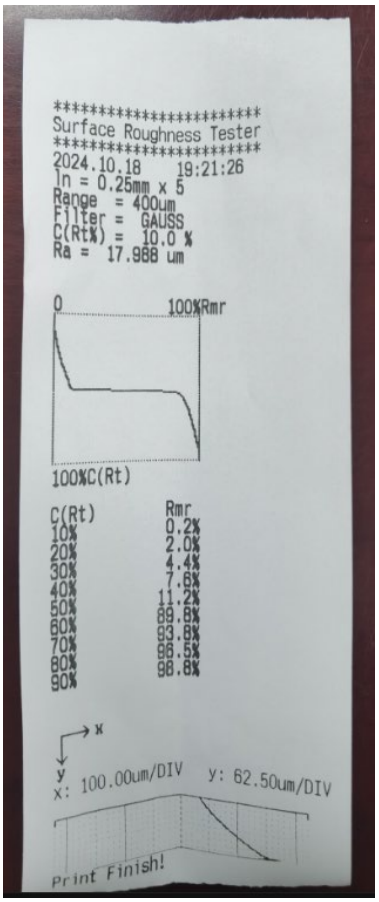
****
Surface Roughness Tester
****
2024.10.18 19:21:26
ln = 0.25mm x 5
Range = 400um
Filter = GAUSS
C(Rt%) = 10.0 %
Ra = 17.988 um
0
100%Rmr
100%C(Rt)
C(Rt) Rmr
10% 0.2%
20% 2.0%
30% 4.4%
40% 7.6%
50% 11.2%
60% 89.8%
70% 93.8%
80% 96.5%
90% 98.8%
x
y
x: 100.00um/DIV y: 62.50um/DIV
Print Finish!

2.18 Dataview of software

Dataview of software can easily be waveform analysis and print measurement results uploaded to the PC machine

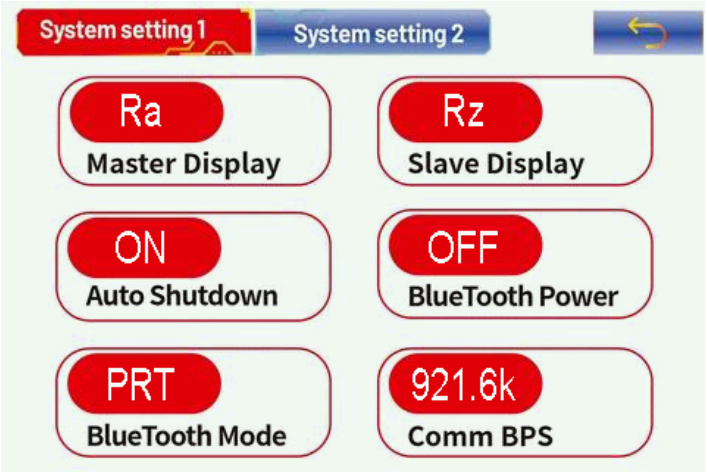

Use Dataview of software , please set the Bluetooth mode to PRT, and turn **OFF** the Bluetooth power and BPS **921.6k**

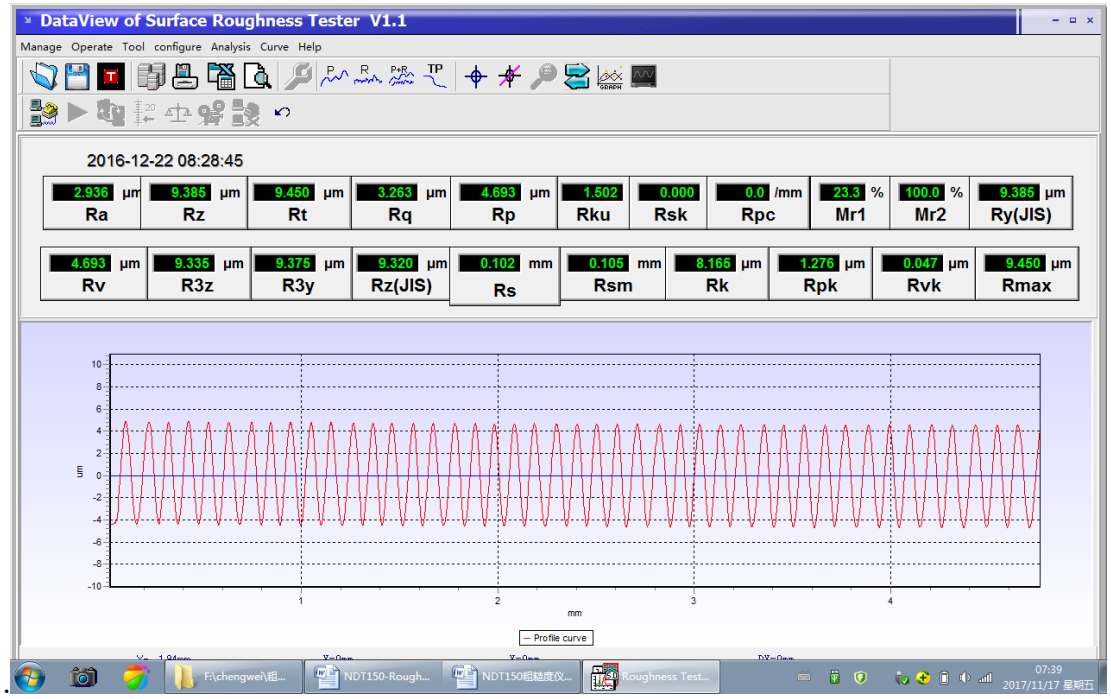

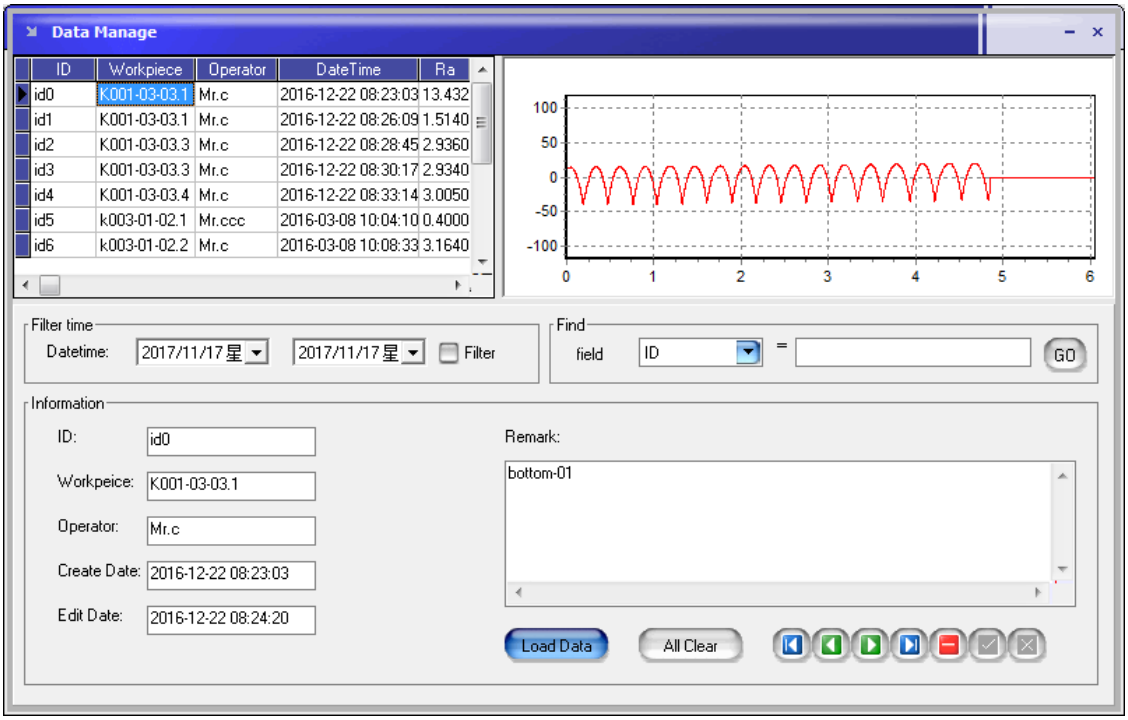
Data Manage
ID
Workpiece
Operator
DateTime
Ra
id0 K001-03-03.1 Mr.c 2016-12-22 08:23:03 13.432
id1 K001-03-03.1 Mr.c 2016-12-22 08:26:09 1.5140
id2 K001-03-03.3 Mr.c 2016-12-22 08:28:45 2.9360
id3 K001-03-03.3 Mr.c 2016-12-22 08:30:17 2.9340
id4 K001-03-03.4 Mr.c 2016-12-22 08:33:14 3.0050
id5 k003-01-02.1 Mr.ccc 2016-03-08 10:04:10 0.4000
id6 k003-01-02.2 Mr.c 2016-03-08 10:08:33 3.1640
100
50
0
-50
-100
0
1
2
3
4
5
6
Filter time
Datetime:
2017/11/17 星
2017/11/17 星
Filter
Find
field
ID
=
GO
Information
ID:
id0
Workpeice:
K001-03-03.1
Operator:
Mr.c
Create Date:
2016-12-22 08:23:03
Edit Date:
2016-12-22 08:24:20
Remark:
bottom-01
Load Data
All Clear

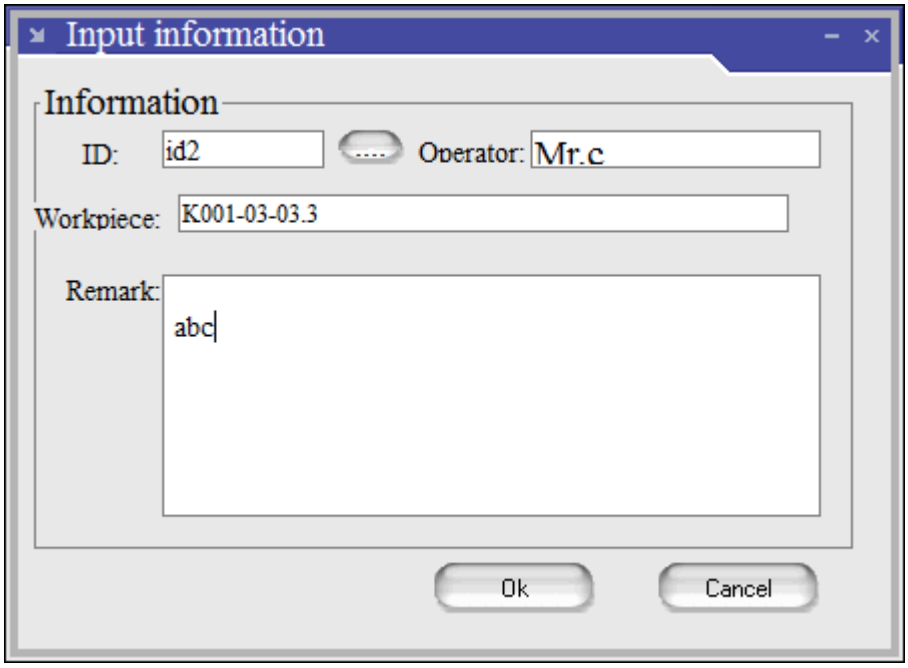
Input information
Information
ID:
id2
....
Operator:
Mr.c
Workpiece:
K001-03-03.3
Remark:
abc
Ok
Cancel

Report of Surface Roughness Tester

Ra = 2.936 µm R3z = 9.335 µm

Rv = 4.693 µm Rp = 4.693 µm

Rt = 9.450 µm Rz = 9.385 µm

RS = 0.102 mm Rsk = 0.000

RSm = 0.105 mm Rq = 3.263 µm

RzJIS = 9.320 µm R3y = 9.375 µm

Rku = 1.502 Rpc = 0.000pks/mm

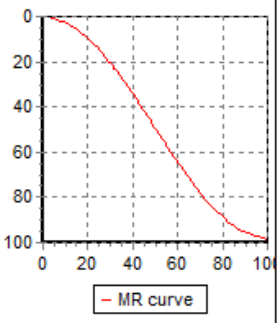

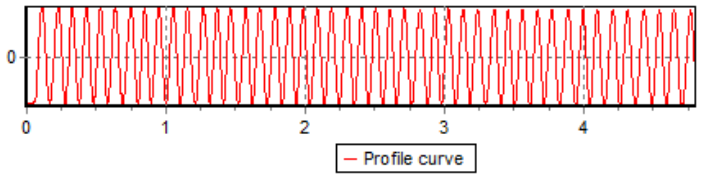

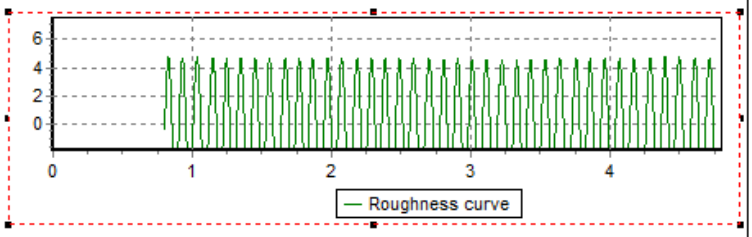

Cutoff: 0.8mm Access: 5 Range:±40µm Filter: GAUSS

Operator: Mr.c Workpiece: K001-03-03.1 Datetime: 2016-12-22 08:28:45

2 Optional Accessories For Drive Unit

2.1 Adjustable height support feet

When the measured surface of the workpiece is smaller than the bases of the instrument, the adjustable height support feet can be used as an auxiliary support to complete the measurement.

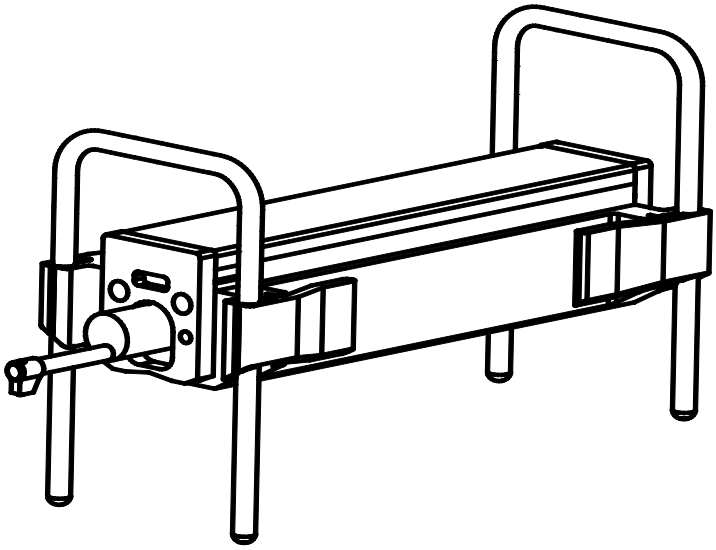

2.2 Magnetic stand adapter

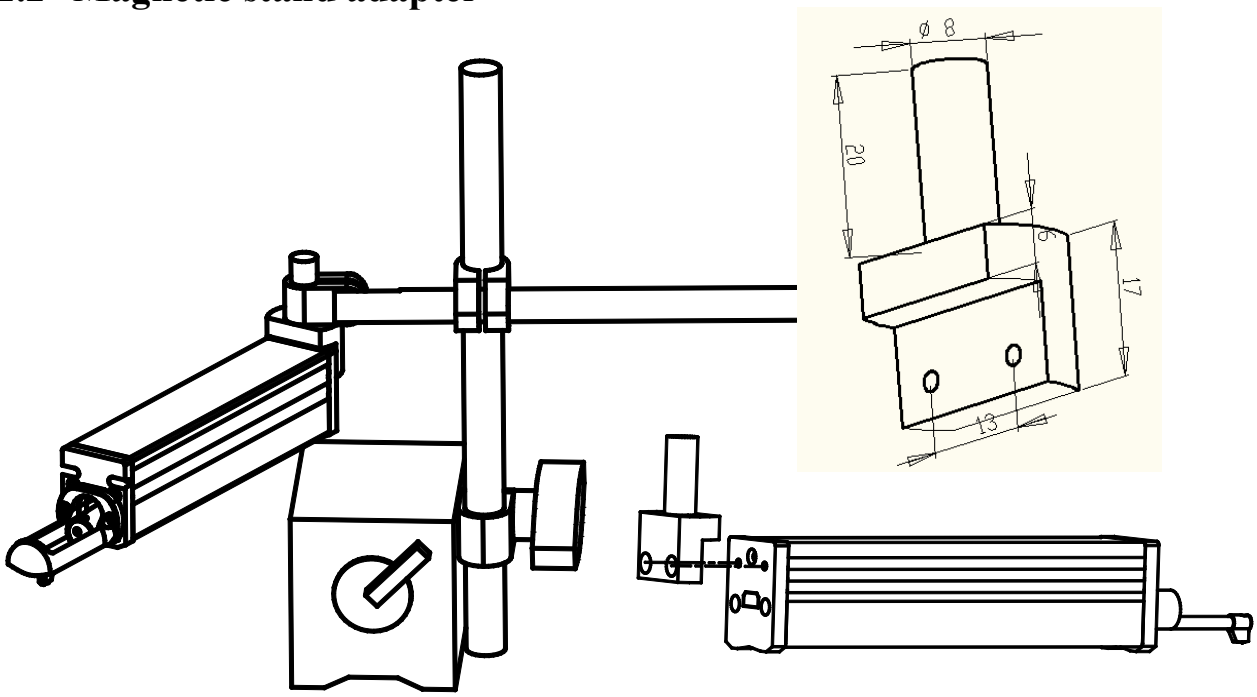

2.3 Height gauge adapter

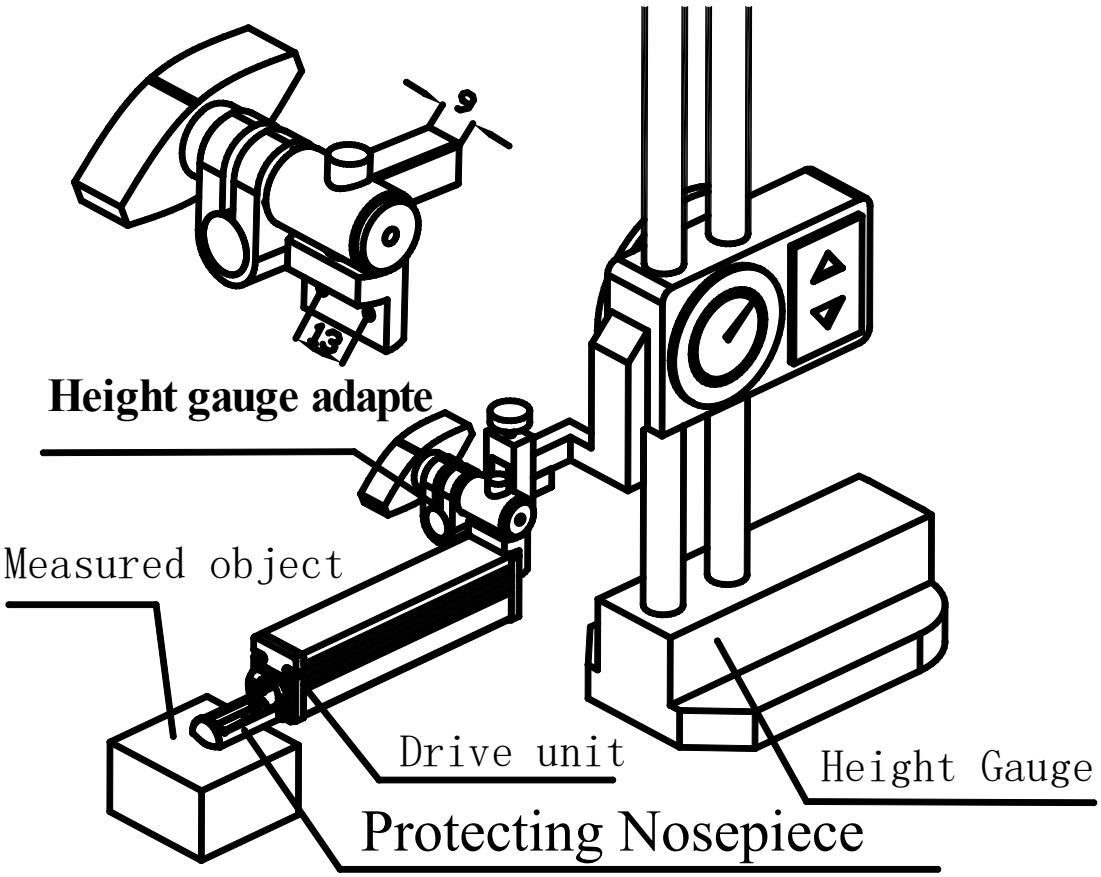

2.4 Measurement Stand

Measurement Stand can adjust the positions between tester and measured part conveniently with flexible and stable operation and wider application range. Roughness of complex shapes can also be measured. Measurement stand enable the adjustment of the position of stylus to be more precise and measurement to be more stable. If Ra value of measured surface is relatively low, Using measurement platform is recommended.

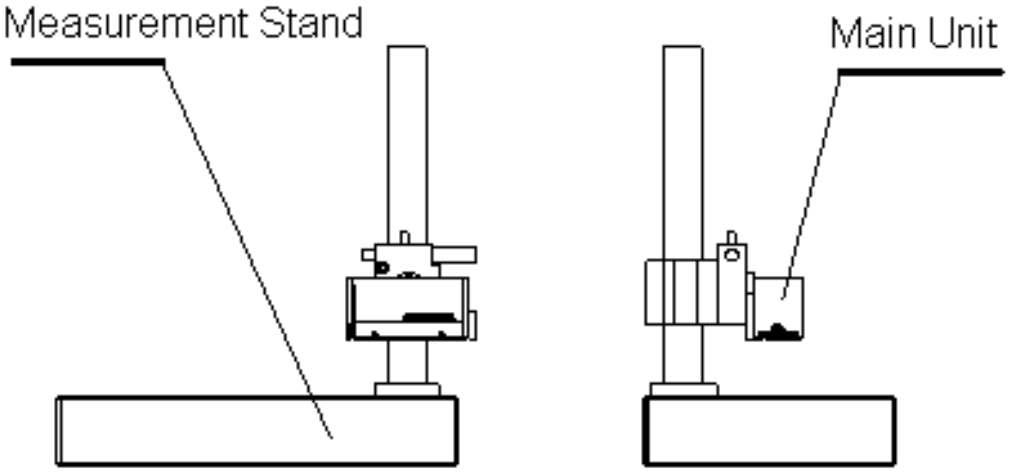

2.5 Extension rod (50mm)

Extension rod increases the depth for pickup to enter the part. Length of extending rod is 50mm.

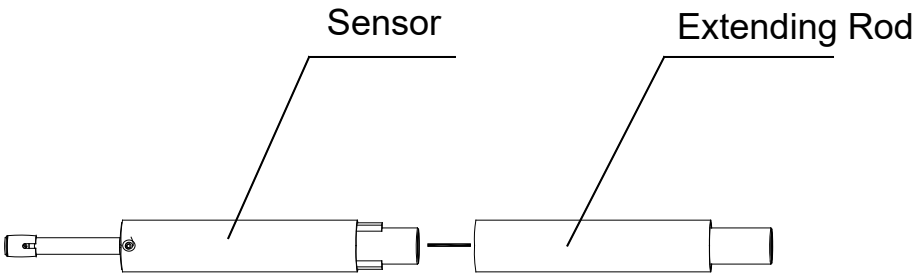

2.6 Axe Type Sensor(Standard configuration)

With axe type sensor, it is possible to measure groove with width wider than 3mm and depth no greater than 3.2mm, The distance from the test point to the top is 1.6mm

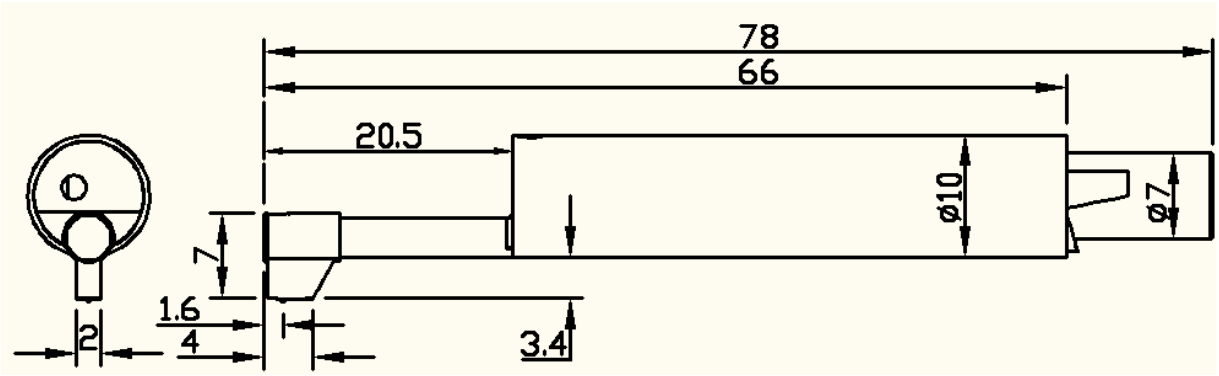

2.7 Groove Sensor

With groove sensor, it is possible to measure groove with width wider than 3mm and depth no deeper than 3.2mm, The distance from the test point to the top is 3mm

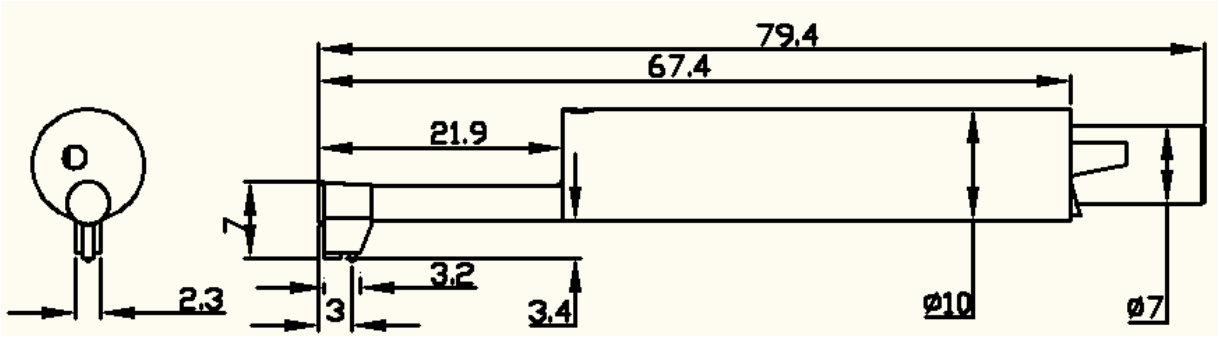

2.8 Small hole Sensor

Small hole sensor can measure the plane, inclined plane, cone surface, inner hole and other surface roughness.
Minimum measurable hole diameter:ϕ4.5mm
The use of small hole sensors must be installed on the measuring stand for measurement.

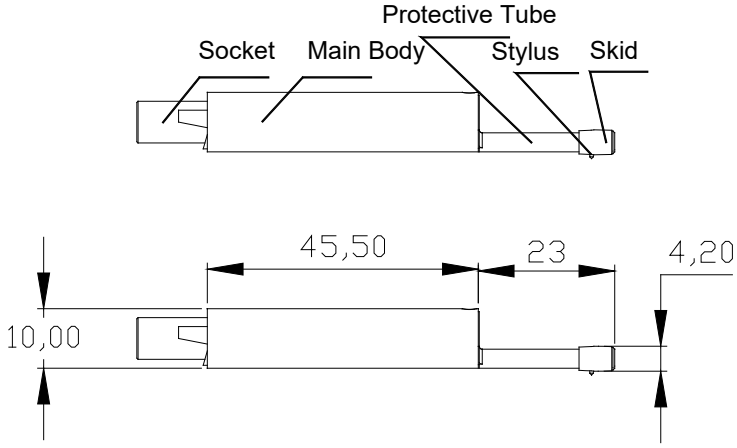

2.9 Curved Surface Sensor

Curved surface sensor is mainly used for measuring radius is larger than the smooth cylindrical 3mm surface roughness, for the larger radius smooth spherical surface and other surface also can obtain good approximation, the radius of curvature, the surface is smooth, the better the effect of measurement.

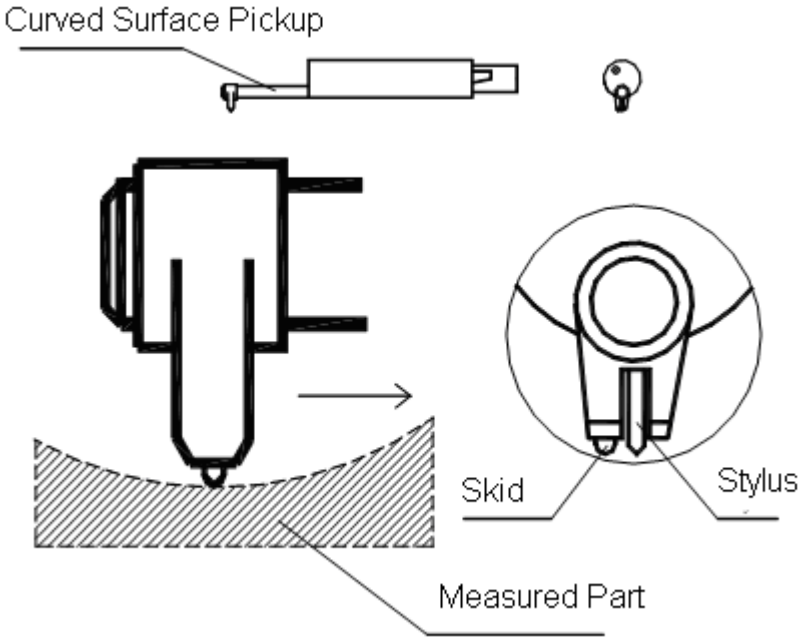

2.9.1 Curved surface sensor operation method

The main difference between the curved surface sensor and other sensors is that the skid and the stylus are parallel, and the other sensors are arranged in front and back.
The curved surface sensor must be installed on the measuring stand for measurement.

2.10 Extra small hole sensor

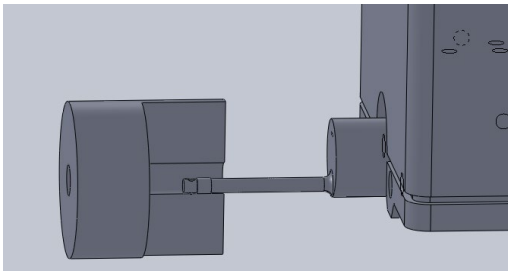

Using Extra small hole sensor, the inner surfaces of holes with radius more than 2mm can be measured. Refer to the following Figure for detailed dimension.

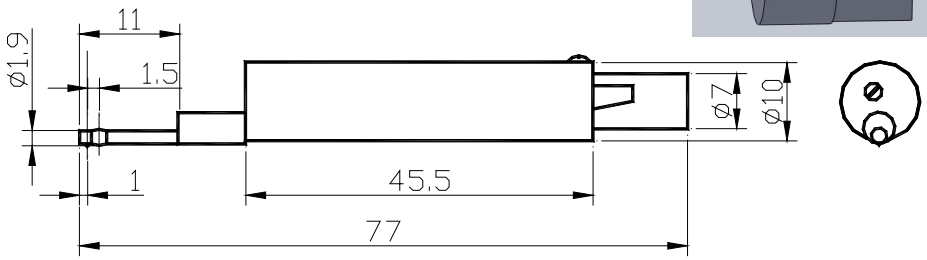

2.10.1 Extra small hole sensor operation method

The skid of the extra small hole sensor is behind the stylus. When it contacts the workpiece, the pickup position is first high and then low.
The use of extra small hole sensors must be installed on the measuring stand for measurement.

2.11 Deep Groove Sensor

With deep groove sensor, it is possible to measure groove with width wider than 3mm and depth deeper than 10mm, or the surface roughness of step with height less than 10mm, Also can used to measure the planar, cylindrical used with platform. please see figure for detailed dimension.

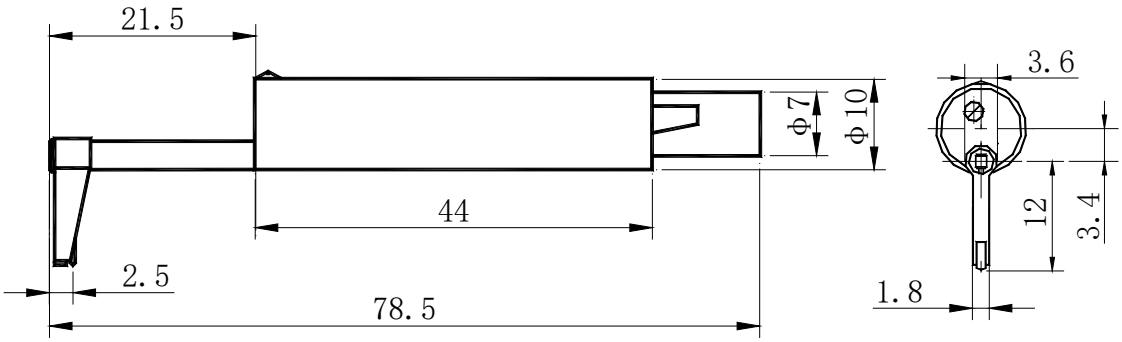

deep groove sensor

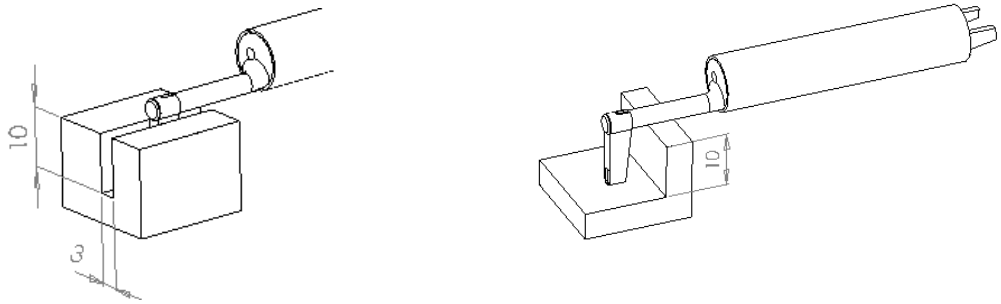

2.12 Nosepiece for flat surface

It is suitable for measuring the roughness of the measured object which is smaller than the roughness tester and the measuring plane is plane. The nosepiece can protect the sensor effectively.

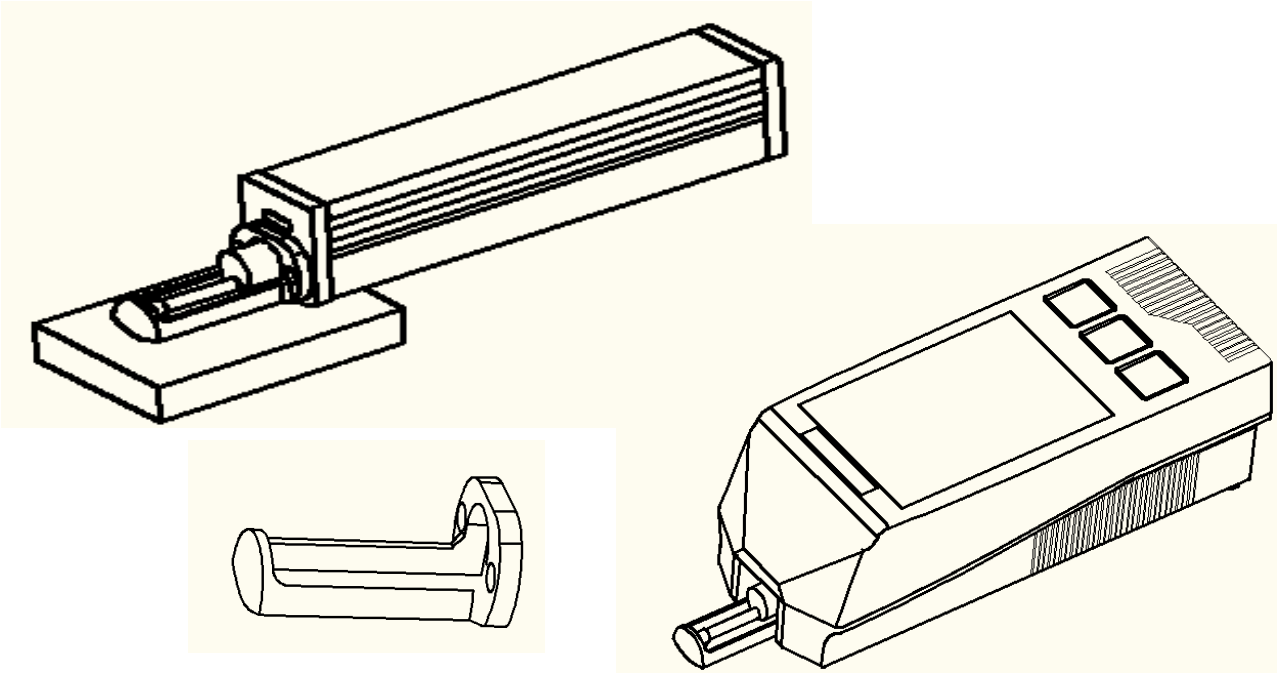

2.13 Nosepiece for cylindrical surface

It is suitable for measuring the roughness of cylindrical object which can not be measured directly. The nosepiece can protect the sensor effectively.

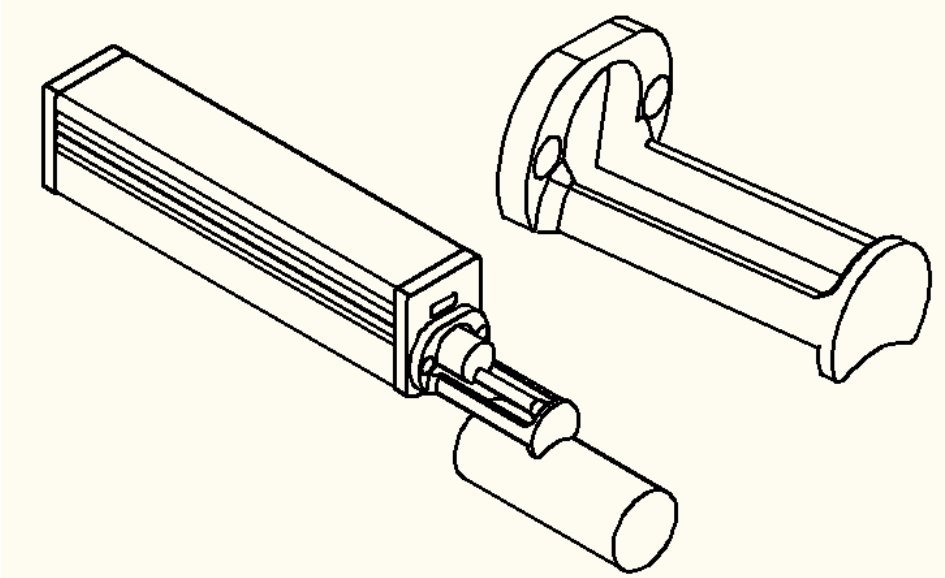

2.14 Miniature thermal printer

The printer is a Bluetooth interface, and the BT indicator lights up when the roughness instrument is connected successfully.

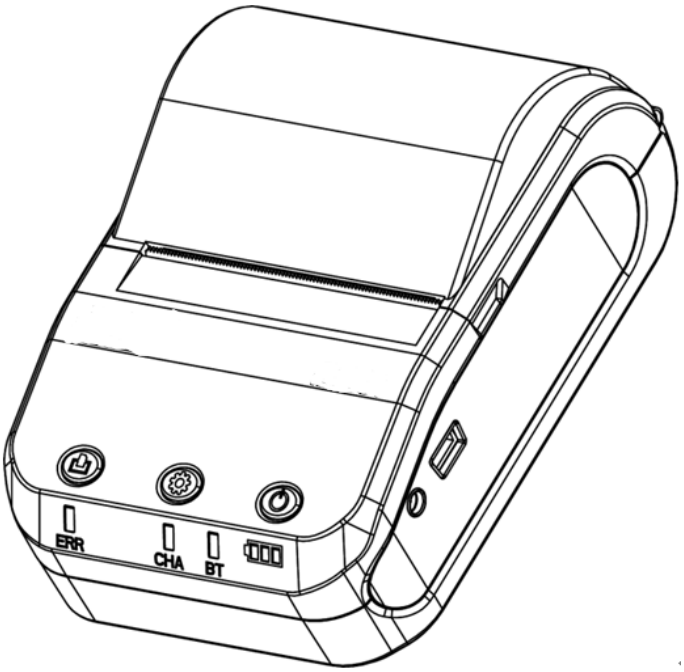

3 Technical Parameter and Features

3.1 Technical Parameter

Name		Content	
Measurement Range	The Z axis (vertical)	320μm (-160μm~160μm) / 12600 μ in (-6300 μ in~+6300 μ in)	
	The X axis (horizontal)	17.5mm/ 0.69"	
Resolution	The Z axis (vertical)	0.002μm/±20μm	0.004μm/±40μm
		0.008μm/±80μm	0.02μm/±160μm
Measurement item	Evaluation Parameter	Ra Rz Rq Rt Rc Rp Rv R3z R3y Rz(JIS) Ry Rs Rsk Rku Rmax Rsm Rmr RPc Rk Rpk Rvk Mr1、Mr2	
	Standard	ISO4287,ANSI b46.1,DIN4768,JISb601	
	Graphic	Primary profile, Roughness profile, load curves	
LCD dimensions		3.5-inch 480*320	
Filter		RC,PC-RC,Gauss,D-P	
The sampling length(*l*r)		0.25,0.8,2.5mm	
Assessment length（*l*n）		*L*n= *l*r×n n=1~5	
Sensor	Principle	The displacement differential inductance	
	Stylus tip	Natural Diamond, 90° cone angle, 5μm tip radius	
	Measuring force	4mN	
	Skid force	Less than 400mN	
	Skid	Ruby，Longitudinal radius 40mm	
	Measuring speed	*l*r=0.25, Vt=0.135mm/s	
		*l*r=0.8, Vt=0. 5mm/s	
		*l*r=2. 5, Vt=1mm/s	
		Return Vt=1mm/s	
Accuracy		±(5nm+0.1A) A: Ra of calibration test block	
Repeatability		No more than 3%	
Residual profile		No more than 0.010μm	
Power supply		Built-in 3.7VLithium ion battery，Charger :DC5V,800mA/5hour	
Working Time		More than 50 hours	
SIZE L×W×H	Display unit	158×55×52mm	
	Drive unit	115×23×27mm	
Mass		About 500g(Display Unit + Dirve Unit + Sensor)	
working Environment		Temperature：- 20℃ ~ 40℃ Humidity：< 90% RH	
Store and Transportation		Temperature：- 40℃ ~ 60℃ Humidity：< 90% RH	

3.2 Measuring Range

Parameter	Measuring range
Ra **Rq**	0.005μm ~ 32μm
Rz **R3z** **Ry** **Rt** **Rp** **Rm**	0.02μm ~ 320μm
RSk	0 ~ 100%
Rs **Rsm**	0.02~1000 μ m
Rmr	0 ~ 100%

4 General Maintenance

4.1 Sensor

1. Any time swap sensors are to be especially careful, careful not to touch the guide head and a stylus, because this is a key part of the whole instrument, to try to hold the sensor guide head bracket roots (the front of the body) plug.
2. To complete the measurement work, please timely sensor into the box;
3. Please pay attention to protect the needle part measuring sensor.
4. The sensor's precision components, any knock, touch, fall off phenomenon may damage the sensor, should try to avoid such situations.
5. The sensor is a damageable parts, do not belong to the scope of warranty parts, only provide repair. In order not to affect the measurement work, users are advised to buy backup sensor used for emergency.

4.2 Main Display Unit

1. Pay attention to maintaining the Main Display Unit surface clean, often with a soft dry cloth to clean its surface.
2. The instrument is a precision measuring instrument, should always be handled with care, to avoid the shock.

4.3 Battery

1. Always observe the battery prompt, when the low voltage, please charge.

2. The charging time is 3 hours, try not to long time charge.

4.4 Roughness Standard specimen

1. The surface of a standard sample plate must be kept clean.
2. To avoid scratches on the surface of sample area.

4.5 Troubleshooting

When the tester breaks down, handle the troubles according to measures described on Fault Information. If troubles still exist, please return the instrument to factory for repair. Users should not dismantle and repair the device by themselves. Returned instrument should be accompanied with sample plate attached. Phenomenon of problem should be explained.

Error message	Cause	Solutions method
After the boot, the display interface is about 1 minutes, turn off.	The cable plug is not tight.	Re insert socket
The sound of the motor can not be heard after turning on the tester.		
Touch screen failure	Touch Parameter loss	touch screen calibration In the main display interface, press ESC key for 6 seconds.
Motor error	Motor stuck	Reboot
Out of Range	1. The measured surface signal exceeding the measurement range 2. Placed away from the center of the stylus position	Increase Measuring range Adjust the Stylus position
No test data	After the boot does not measure.	The actual measurement: one time
Measurement Accuracy Out of Range	Set the parameter error Calibration data error	Set the parameter measurement Calibrate the tester

5 References

5.1 Terms

The instrument calculate parameters on the filter profile and the direct profile , all calculated in line with the ISO4287 "Geometrical Product Specification(GPS) —— Surface texture: Profile method——Term,definitions and surface texture parameters."

6.1.1 Terms

Filtered profile: profile signal after primary profile is filtered to remove waviness.

D-P (direct-profile): adopt central line of Least Square Algorithm.

RC filter: analogue 2RC filter with phase difference.

PC-RC filter: RC filter with phase-correction.

Gauss filter: ISO11562.

6.1.2 Traversing Length

●RC Filter

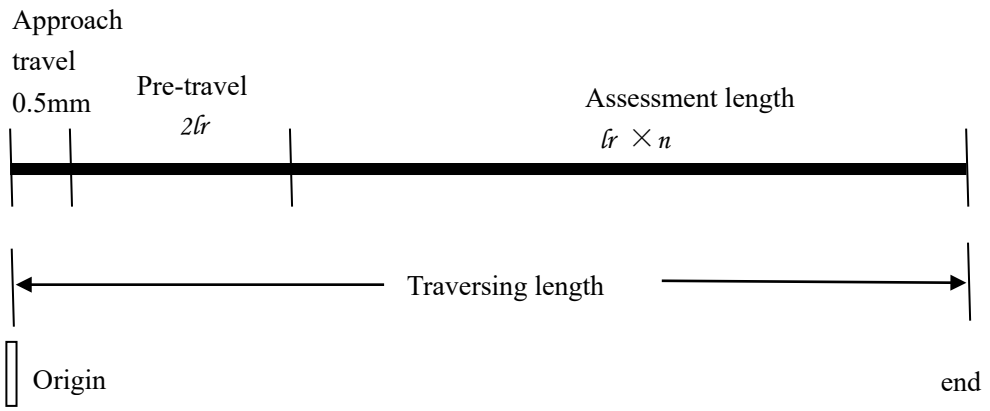

● GAUSS Filter

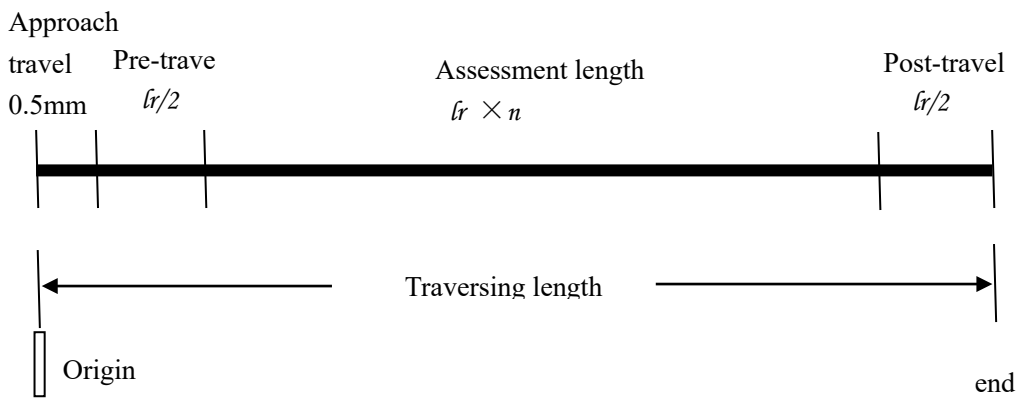

● PCRC Filter

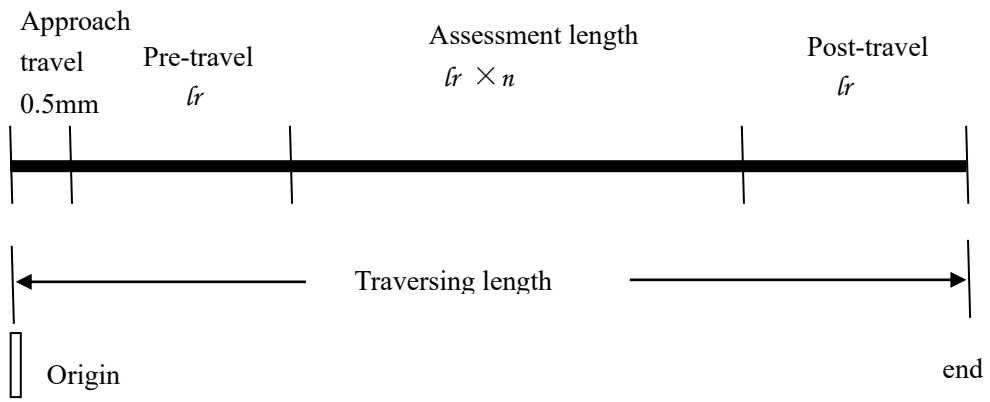

● D-P direct profile

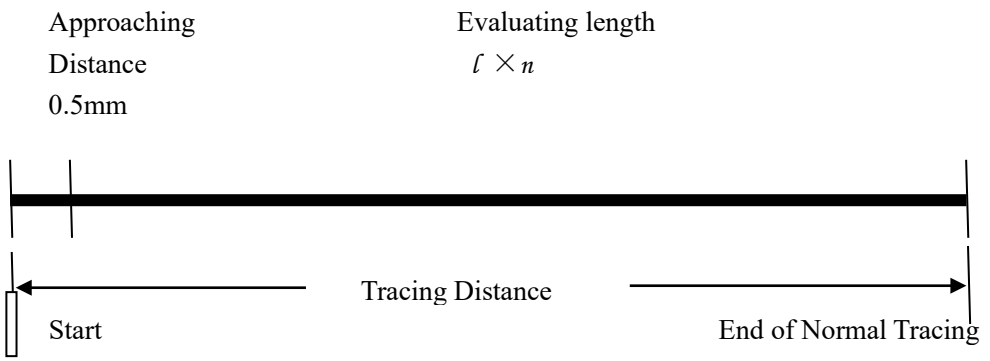

5.2 Parameters Definitions

5.2.1 Arithmetical Mean Deviation of Profile **Ra**

Ra is arithmetic mean of the absolute values of profile deviation Z（x）from mean within sampling length.

$$Ra = \frac{1}{l}\int_0^l |Z(x)|dx$$

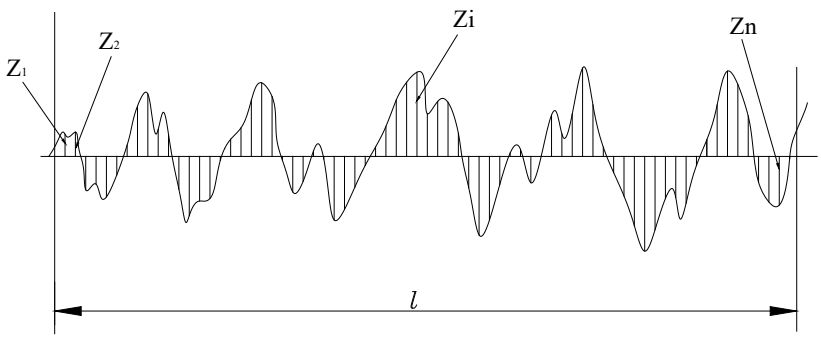

5.2.2 Root-mean-square Deviation of Profile **Rq**

Rq is the square root of the arithmetic mean of the squares of profile deviation Z(x) from mean within sampling length.

$$Rq = \sqrt{\frac{1}{l}\int_0^l Z^2(x)dx}$$

5.2.3 Maximum Height of Profile **Rz**

Rz is The sum of height Zp of the highest profile peak from the mean line and depth Zv of the deepest profile valley from the mean line within sampling length。

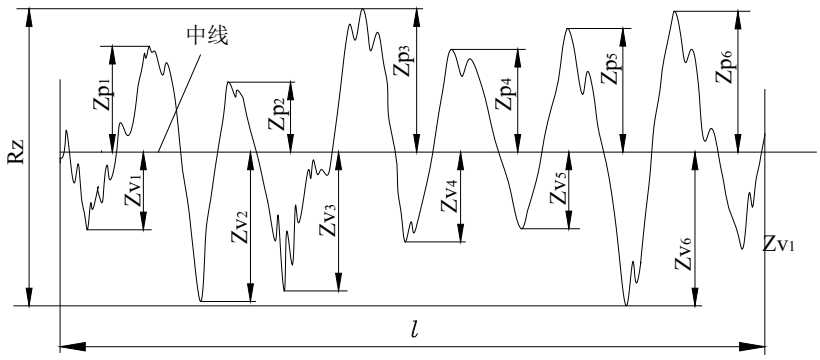

5.2.4 Total Peak-to-valley Height **Rt**

Rt is the sum of the height of the highest peak Zp and the depth of the deepest valley Zv over the evaluation length.

5.2.5 Maximum height of Profile Peak Rp

Rp is the height from the highest profile peak line to mean line within sampling length。

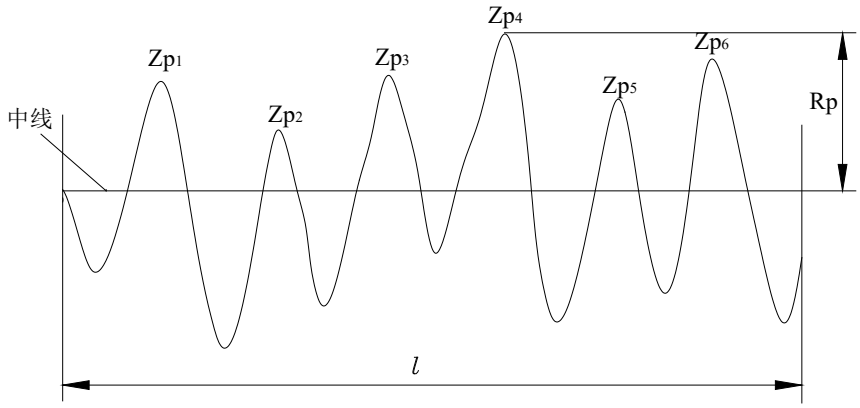

5.2.6 Maximum Depth of Profile Valley **Rv**

Rv is the depth from the deepest profile valley line to mean line within sampling length。

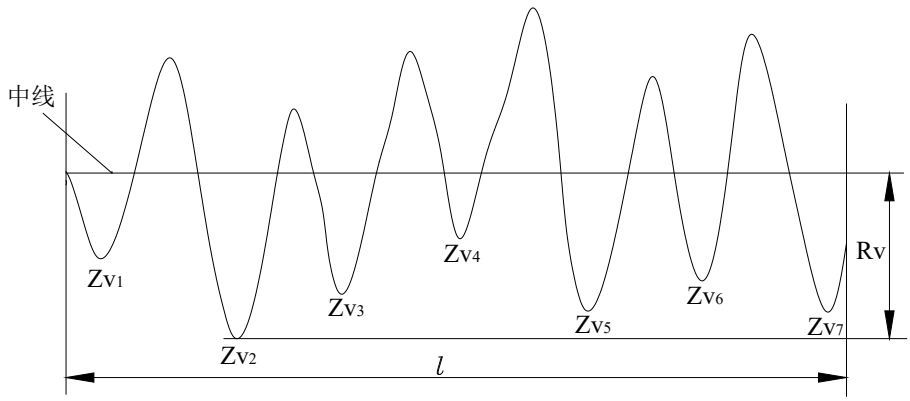

5.2.7 Mean Spacing of Local Peaks of Profile **RS**

RS is the mean spacing of adjacent local peaks of the profile within sampling length.

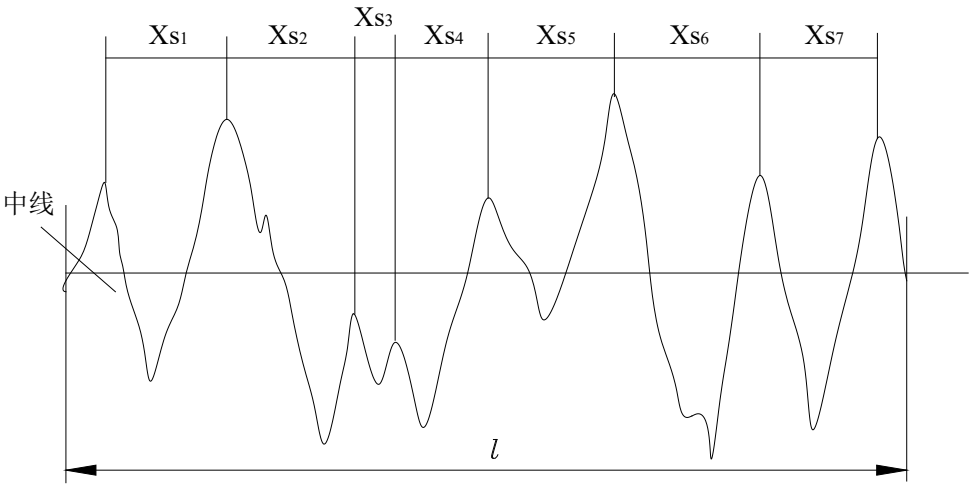

5.2.8 Mean Spacing of Profile elements **RSm**

RSm is the mean spacing between profile peaks at the mean line within sampling length.

$$RSm = \frac{1}{n}\sum_{i=1}^{m} XSi$$

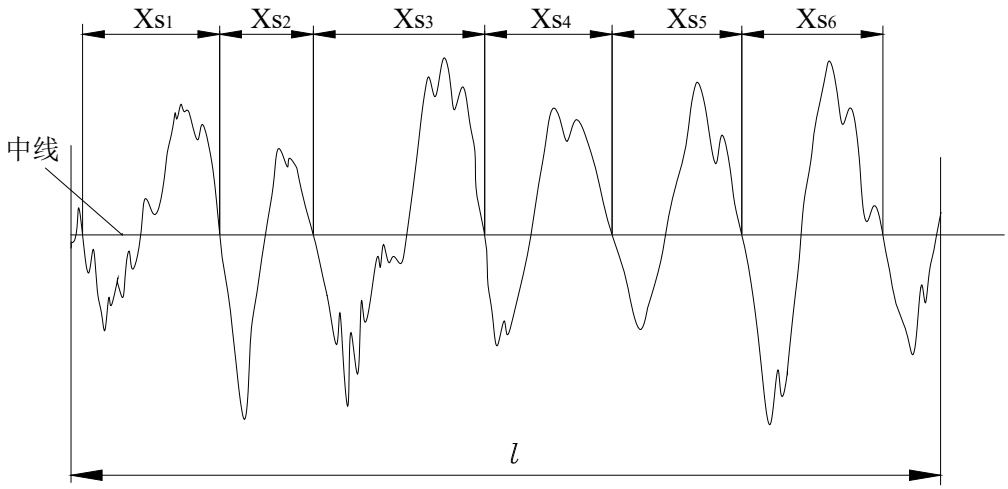

5.2.9 Ten Point Height of Irregularities **RzJIS**

The sum of the mean height of the five highest profile peaks and the mean depth of the five deepest profile valley from mean within the sampling length.

$$RzJIS = \frac{1}{5}\sum_{i=1}^{5} Yp_i + \frac{1}{5}\sum_{i=1}^{5} Yv_i$$

5.2.10 Maximum Height of Profile **RyJIS**

The same to 6.2.3 Rz.

5.2.11 Skewness of the profile **RSk**

RSk is the quotient of the mean cube value of the profile deviation (Yi) and the cube of Rq within sampling length.

$$Rsk = \frac{1}{Rq^3}\left[\frac{1}{lr}\int_0^{lr} Z^3(x)dx\right]$$

5.2.12 Third Maximum Peak-to-valley Height **R3z**

R_{3z} is the mean of the sum of the third profile peak height and the third profile valley depth of each sampling length over evaluation length.

$$R3z = \sum_{i=1}^{i=n} R3zi$$

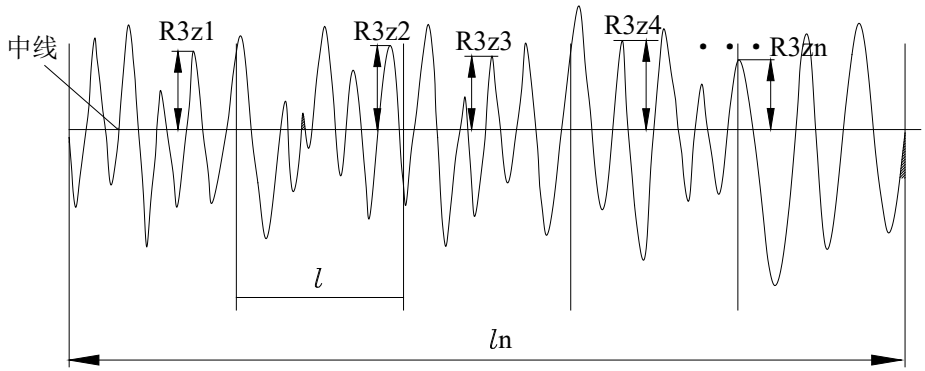

5.2.13 Rmax

The same to6.2.4 Rt.

5.2.14 Peak count **Rpc**

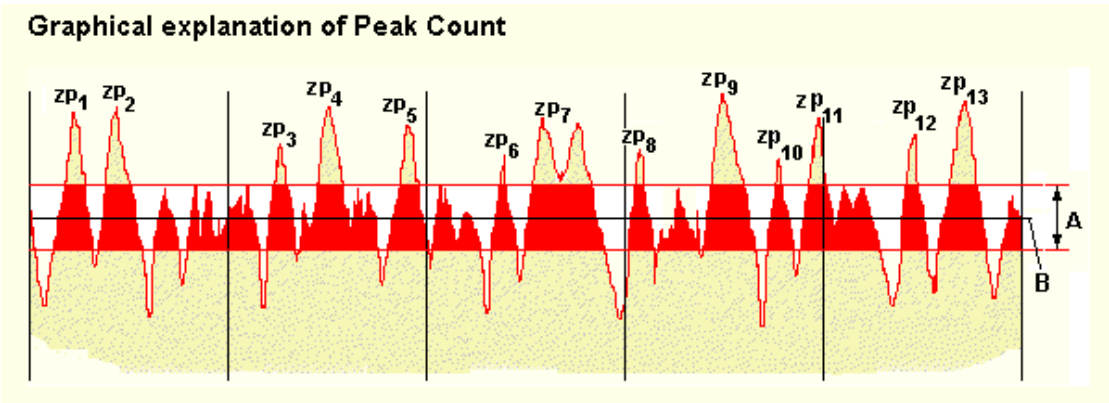

$$RPc = \frac{\text{No. of peaks counted}}{\text{Evaluation length (cm)}} = \text{Peaks/cm}$$

5.2.15 Material ratio curve of profile **Rmr**

The material ratio of change with horizontal position and the relationship between the curve.

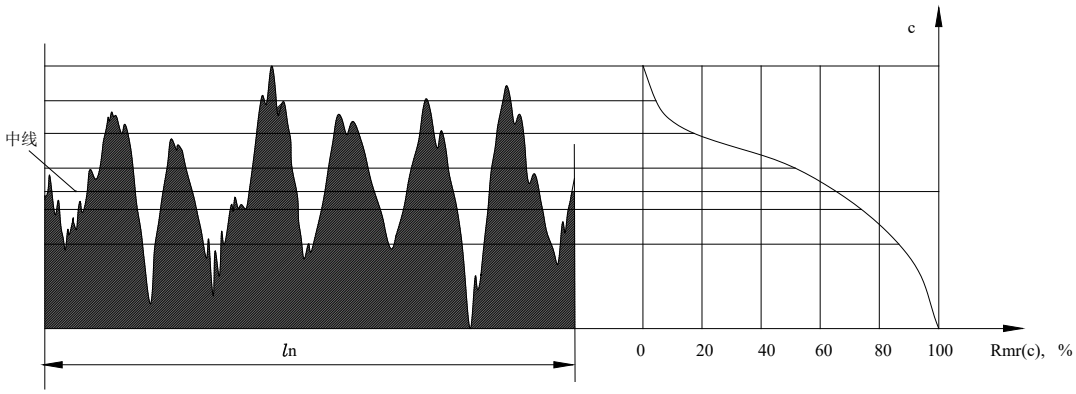

5.2.16 Material length ratio **Rmr（c）**

Horizontal position in a given contour C on the physical materials and the assessment length of the length ratio.

$$Rmr(c) = \frac{\text{Material length (c)}}{\text{Evaluation length}}$$

5.3 Recommended table of the sampling length

Ra (μm)	Rz (μm)	Sample length
＞5～10	＞20～40	2.5
＞2.5～5	＞10～20	
＞1.25～2.5	＞6.3～10	0.8
＞0.63～1.25	＞3.2～6.3	
＞0.32～0.63	＞1.6～3.2	
＞0.25～0.32	＞1.25～1.6	0.25
＞0.20～0.25 ＞0.16～0.20	＞1.0～1.25 ＞0.8～1.0	
＞0.125～0.16 ＞0.1～0.125 ＞0.08～0.1	＞0.63～0.8 ＞0.5～0.63 ＞0.4～0.5	
＞0.063～0.08 ＞0.05～0.063 ＞0.04～0.05	＞0.32～0.4 ＞0.25～0.32 ＞0.2～0.25	
＞0.032～0.04 ＞0.025～0.032 ＞0.02～0.025	＞0.16～0.2 ＞0.125～0.16 ＞0.1～0.125	

The configuration list of Instrument

Number	Name	Quantit	Remarks
1	Main Unit	1	
2	Sensor	1	Precision parts
3	Adjustable height support feet	1	
4	Calibration test block	1	
5	Test block bracket	1	
6	Extension cable	1	
7	Touch pen	1	
8	Charger	1	
9	USB charging cable	1	
10	operating manual	1	
11	certificate	1	
12	guarantee card	1	
13	Instrument container	1	
14	Soft CD		Optional accessories
15	Magnetic stand adapter		Optional accessories
16	Height gauge adapte		Optional accessories
17	Nosepiece for flat surface		Optional accessories
18	Nosepiece for cylindrical surface		Optional accessories
19	Thermal printer		Optional accessories
20	Small hole Sensor		Optional accessories
21	Extra small hole sensor		Optional accessories
22	Curved Surface Sensor		Optional accessories
23	Deep Groove Sensor		Optional accessories
24	Extension rod (50mm)		Optional accessories
25	Measurement Stand		Optional accessories

FCC Warning Statement

Changes or modifications not expressly approved by the party responsible for compliance could void the user's authority to operate the equipment. This equipment has been tested and found to comply with the limits for a Class B digital device, pursuant to Part 15 of the FCC Rules. These limits are designed to provide reasonable protection against harmful interference in a residential installation. This equipment generates uses and can radiate radio frequency energy and, if not installed and used in accordance with the instructions, may cause harmful interference to radio communications. However, there is no guarantee that interference will not occur in a particular installation. If this equipment does cause harmful interference to radio or television reception, which can be determined by turning the equipment off and on, the user is encouraged to try to correct the interference by one or more of the following measures:

-- Reorient or relocate the receiving antenna.

-- Increase the separation between the equipment and receiver.

--Connect the equipment into an outlet on a circuit different from that to which the receiver is connected.

-- Consult the dealer or an experienced radio/TV technician for help.

This device complies with part 15 of the FCC Rules. Operation is subject to the following two conditions: (1) This device may not cause harmful interference, and

(2) this device must accept any interference received, including interference that may cause undesired operation.

NOTE: This device and its antenna(s) must not be co-located or operation in conjunction with any other antenna or transmitter.

The device has been evaluated to meet general RF exposure requirement. The device can be used in portable exposure condition without restriction.

Amtast USA Inc.
438 Skyline Dr E Lakeland FL.33809 U.S.A.
URL: www.amtast.com
E-mail: amtast1@gmail.com, info@amtast.com