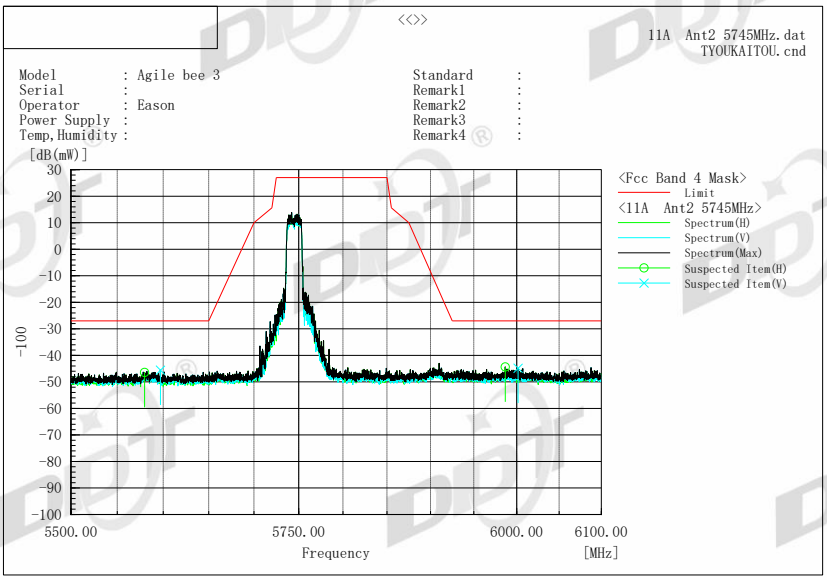

Frequency [MHz]	Pol	Reading [dB(mW)]	Loss [dB]	Level [dB(mW)]	Limit [dB(mW)]	Margin [dB]	Azimuth [°]
5579.698	H	-65.2	18.7	-46.5	-27	19.5	230.3
5986.68	H	-64.3	19.9	-44.4	-27	17.4	172.2
5596.912	V	-64.7	19.1	-45.6	-27	18.6	298.3
6001.624	V	-65	20.2	-44.8	-27	17.8	354.1

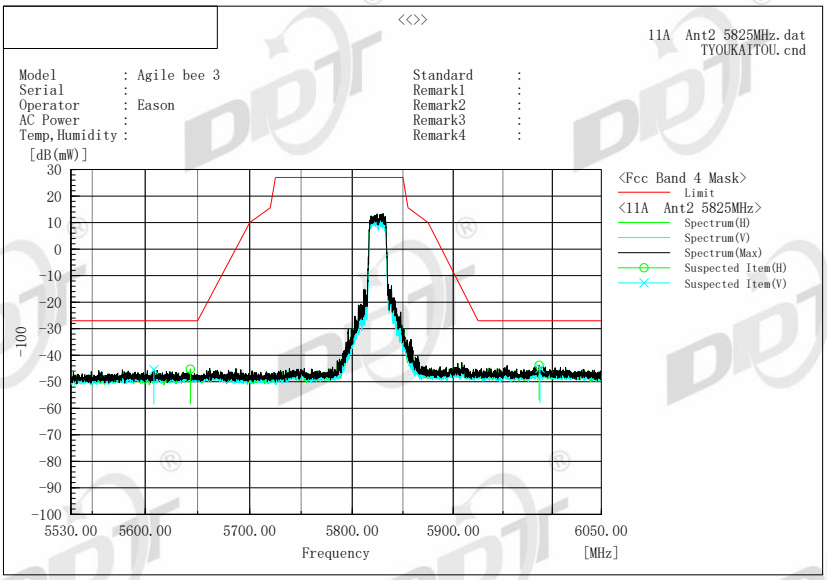

Frequency [MHz]	Pol	Reading [dB(mW)]	Loss [dB]	Level [dB(mW)]	Limit [dB(mW)]	Margin [dB]	Azimuth [°]
5643.129	H	-63.9	18.7	-45.2	-27	18.2	285.4
5986.579	H	-63.7	19.9	-43.8	-27	16.8	120.6
5608.213	V	-64.4	19	-45.4	-27	18.4	212.9
5987.405	V	-65	20.1	-44.9	-27	17.9	229.1

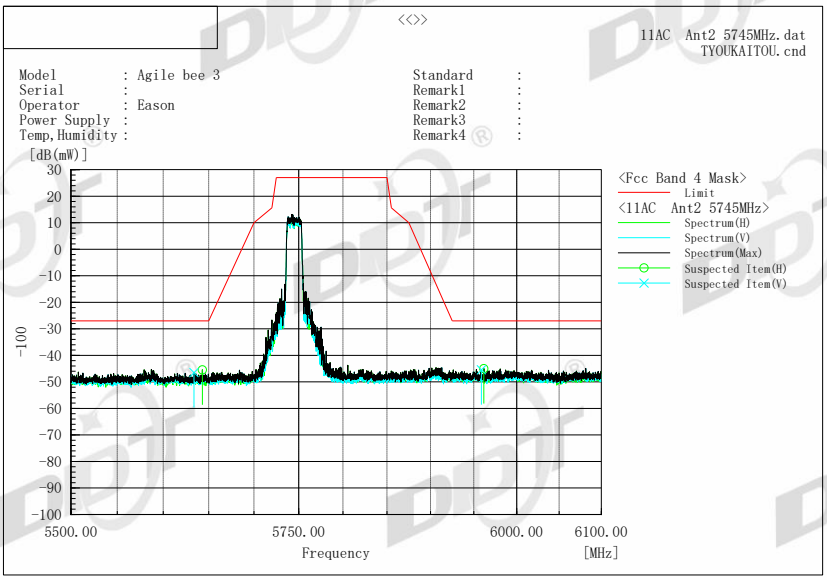

Frequency [MHz]	Pol	Reading [dB(mW)]	Loss [dB]	Level [dB(mW)]	Limit [dB(mW)]	Margin [dB]	Azimuth [°]
5642.987	H	-64.2	18.7	-45.5	-27	18.5	164.3
5961.629	H	-64.4	19.4	-45	-27	18	14.1
5633.757	V	-65.4	18.9	-46.5	-27	19.5	56.9
5958.845	V	-64.9	19.5	-45.4	-27	18.4	59.3

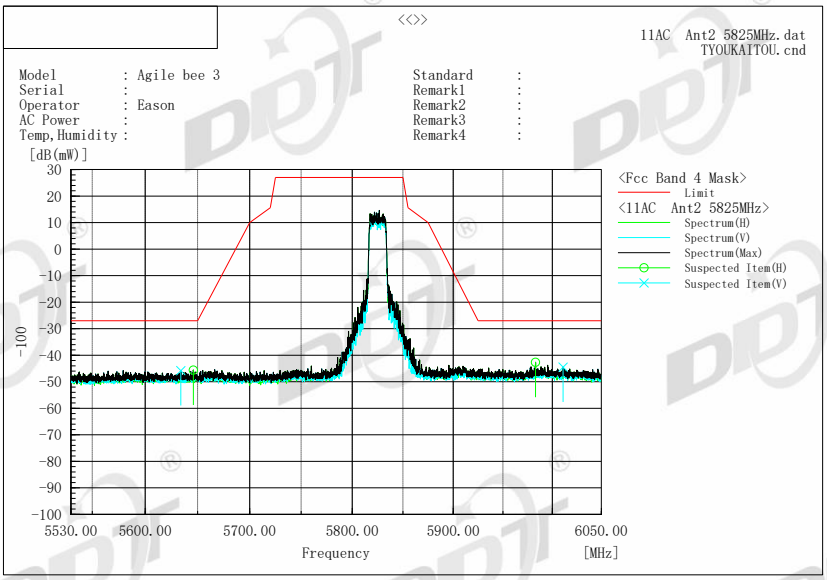

Frequency [MHz]	Pol	Reading [dB(mW)]	Loss [dB]	Level [dB(mW)]	Limit [dB(mW)]	Margin [dB]	Azimuth [°]
5633.924	V	-64.7	18.9	-45.8	-27	18.8	266.7
6010.894	V	-64.6	20.1	-44.5	-27	17.5	141.5
5645.859	H	-64.2	18.6	-45.6	-27	18.6	322.2
5982.897	H	-62.5	19.8	-42.7	-27	15.7	114.5

9.5. Power Line Conducted Emission

9.6. Block diagram of test setup

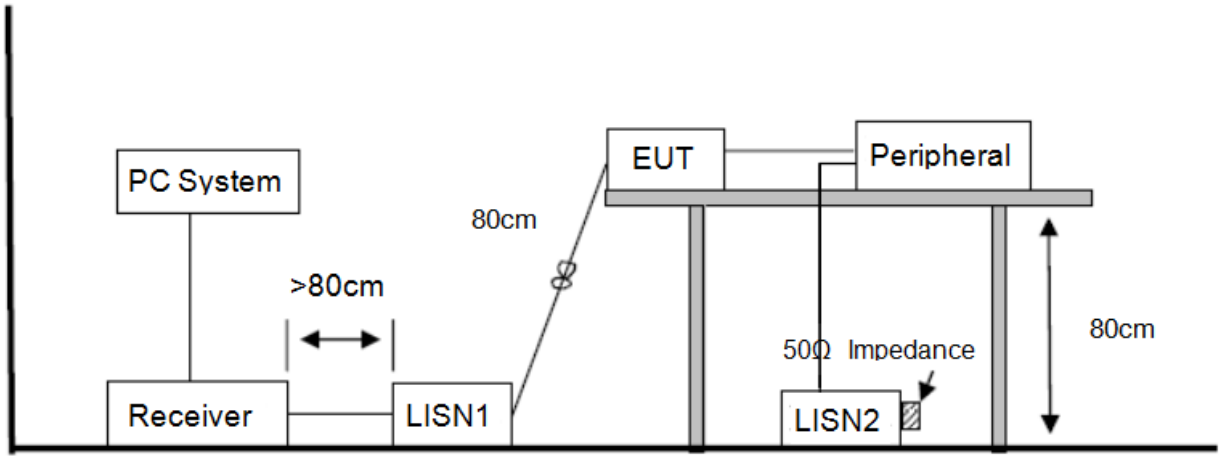

9.7. Power Line Conducted Emission Limits (Class B)

Frequency	Quasi-Peak Level dB(μV)	Average Level dB(μV)
150 kHz ~ 500 kHz	66 ~ 56*	56 ~ 46*
500 kHz ~ 5 MHz	56	46
5 MHz ~ 30 MHz	60	50

Note 1: * Decreasing linearly with logarithm of frequency.

Note 2: The lower limit shall apply at the transition frequencies.

9.8. Test Procedure

The EUT and Support equipment, if needed, were put placed on a non-metallic table, 80cm above the ground plane.

Configuration EUT to simulate typical usage as described in clause 2.3 and test equipment as described in clause 10.2 of this report.

All I/O cables were positioned to simulate typical actual usage as per ANSI C63.4.

All support equipment power received from a second LISN.

Emissions were measured on each current carrying line of the EUT using an EMI Test Receiver connected to the LISN powering the EUT.

The Receiver scanned from 150 kHz to 30MHz for emissions in each of the test modes.

During the above scans, the emissions were maximized by cable manipulation.

The test mode(s) described in clause 2.3 were scanned during the preliminary test.

After the preliminary scan, we found the test mode producing the highest emission level.

The EUT configuration and worse cable configuration of the above highest emission levels were recorded for reference of the final test.
EUT and support equipment were set up on the test bench as per the configuration with highest emission level in the preliminary test.

A scan was taken on both power lines, Neutral and Line, recording at least the six highest emissions.

Emission frequency and amplitude were recorded into a computer in which correction factors were used to calculate the emission level and compare reading to the applicable limit.

The test data of the worst-case condition(s) was recorded.

The bandwidth of test receiver is set at 9 kHz.

9.9. Test Result

Not Applicable.

10. Antenna Requirements

10.1. Limit

For intentional device, according to FCC 47 CFR Section 15.203, an intentional radiator shall be designed to ensure that no antenna other than that furnished by the responsible party shall be used with the device. And according to FCC 47 CFR Section 15.247 (b), if transmitting antennas of directional gain greater than 6dBi are used, the power shall be reduced by the amount in dB that the directional gain of the antenna exceeds 6dBi.

10.2. Result

The device support equips two antennas, this product was dedicated FPC antennas and other than that furnished by the responsible party shall be used with the device, maximum antenna gain is 4.80 dBi for antenna 1, 3.69 dBi for antenna 2.

11. Dynamic Frequency Selection

11.1. Applicability of DFS requirements

Table 1: Applicability of DFS Requirements Prior to Use of a Channel

Requirement	Operational Mode		
	☐Master	☒Client Without Radar Detection	☐Client with Radar Detection
Non-Occupancy Period	Yes	Not required	Yes
DFS Detection Threshold	Yes	Not required	Yes
Channel Availability Check Time	Yes	Not required	Not required
U-NII Detection Bandwidth	Yes	Not required	Yes

Table 2: Applicability of DFS requirements during normal operation

Requirement	Operational Mode	
	☐Master Device or Client with Radar Detection	☒Client Without Radar Detection
DFS Detection Threshold	Yes	Not required
Channel Closing Transmission Time	Yes	Yes
Channel Move Time	Yes	Yes
U-NII Detection Bandwidth	Yes	Not required

Additional requirements for devices with multiple bandwidth modes	☐Master Device or Client with Radar Detection	☒Client Without Radar Detection
U-NII Detection Bandwidth and Statistical Performance Check	All BW modes must be tested	Not required
Channel Move Time and Channel Closing Transmission Time	Test using widest BW mode available	Test using the widest BW mode available for the link
All other tests	Any single BW mode	Not required
Note: Frequencies selected for statistical performance check should include several frequencies within the radar detection bandwidth and frequencies near the edge of the radar detection bandwidth. For 802.11 devices it is suggested to select frequencies in each of the bonded 20 MHz channels and the channel center frequency.		

11.2. Limit

(1) DFS Detection Thresholds

Table 3: DFS Detection Thresholds for Master Devices and Client Devices with Radar Detection

Maximum Transmit Power	Value (See Notes 1, 2, and 3)
EIRP ≥ 200 milliwatt	-64 dBm
EIRP < 200 milliwatt and power spectral density < 10 dBm/MHz	-62 dBm
EIRP < 200 milliwatt that do not meet the power spectral density requirement	-64 dBm
Note 1: This is the level at the input of the receiver assuming a 0 dBi receive antenna. Note 2: Throughout these test procedures an additional 1 dB has been added to the amplitude of the test transmission waveforms to account for variations in measurement equipment. This will ensure that the test signal is at or above the detection threshold level to trigger a DFS response. Note3: EIRP is based on the highest antenna gain. For MIMO devices refer to KDB Publication 662911 D01.	

(2) DFS Response Requirements

Table 4: DFS Response Requirement Values

Parameter	Value
Non-occupancy period	Minimum 30 minutes
Channel Availability Check Time	60 seconds
Channel Move Time	10 seconds See Note 1.
Channel Closing Transmission Time	200 milliseconds + an aggregate of 60 milliseconds over remaining 10 second period. See Notes 1 and 2.
U-NII Detection Bandwidth	Minimum 100% of the U-NII 99% transmission power bandwidth. See Note 3.
Note 1: Channel Move Time and the Channel Closing Transmission Time should be performed with Radar Type 0. The measurement timing begins at the end of the Radar Type 0 burst. Note 2: The Channel Closing Transmission Time is comprised of 200 milliseconds starting at the beginning of the Channel Move Time plus any additional intermittent control signals required facilitating a Channel move (an aggregate of 60 milliseconds) during the remainder of the 10 second period. The aggregate duration of control signals will not count quiet periods in between transmissions. Note 3: During the U-NII Detection Bandwidth detection test, radar type 0 should be used. For each frequency step the minimum percentage of detection is 90 percent. Measurements are performed with no data traffic.	

11.3. Parameters of radar test waveforms

This section provides the parameters for required test waveforms, minimum percentage of successful detections, and the minimum number of trials that must be used for determining DFS conformance. Step intervals of 0.1 microsecond for Pulse Width, 1 microsecond for PRI, 1 MHz for chirp width and 1 for the number of pulses will be utilized for the random determination of specific test
waveforms.

Table 5 Short Pulse Radar Test Waveforms

Radar Type	Pulse Width (μsec)	PRI (μsec)	Number of Pulses	Minimum Percentage of Successful Detection	Minimum Number of Trials
0	1	1428	18	See Note 1	See Note 1
1	1	Test A	$\text{Roundup}\left\{\left(\frac{1}{360}\right)\cdot\left(\frac{19\cdot 10^6}{\text{PRI}_{\mu sec}}\right)\right\}$	60%	30
		Test B			
2	1-5	150-230	23-29	60%	30
3	6-10	200-500	16-18	60%	30
4	11-20	200-500	12-16	60%	30
Aggregate (Radar Types 1-4)				80%	120

Note 1: Short Pulse Radar Type 0 should be used for the detection bandwidth test, channel move time, and channel closing time tests.
Test A: 15 unique PRI values randomly selected from the list of 23 PRI values in Table 5a
Test B: 15 unique PRI values randomly selected within the range of 518-3066 μsec, with a minimum increment of 1 μsec, excluding PRI values selected in Test A

A minimum of 30 unique waveforms are required for each of the Short Pulse Radar Types 2 through 4. If more than 30 waveforms are used for Short Pulse Radar Types 2 through 4, then each additional waveform must also be unique and not repeated from the previous waveforms. If more than 30 waveforms are used for Short Pulse Radar Type 1, then each additional waveform is generated with Test B and must also be unique and not repeated from the previous waveforms in Tests A or B. Test aggregate is average of the percentage of successful detections of short pulse radar types 1-4

11.4. Calibration of radar waveform

Radar Waveform Calibration Procedure:

(1) A 50 ohm load is connected in place of the spectrum analyzer, and the spectrum analyzer is connected to place of the master

(2) The interference Radar Detection Threshold Level is -64dBm + 0dBi +1dB = -63dBm that had been taken into account the output power range and antenna gain.

(3) The following equipment setup was used to calibrate the conducted radar waveform. A vector signal generator was utilized to establish the test signal level for radar type 0. During this process there were no transmissions by either the master or client device. The spectrum analyzer was switched to the zero spans (time domain) at the frequency of the radar waveform generator. Peak detection was used. The spectrum analyzer resolution bandwidth (RBW) and video bandwidth (VBW) were set to 3 MHz. The spectrum analyzer had offset -1.0dB to compensate RF cable loss 1.0dB.

(4) The vector signal generator amplitude was set so that the power level measured at the spectrum analyzer was - -64dBm + 0dBi +1dB = -63dBm. Capture the spectrum analyzer plots on short pulse radar waveform.

Conducted Calibration Setup:

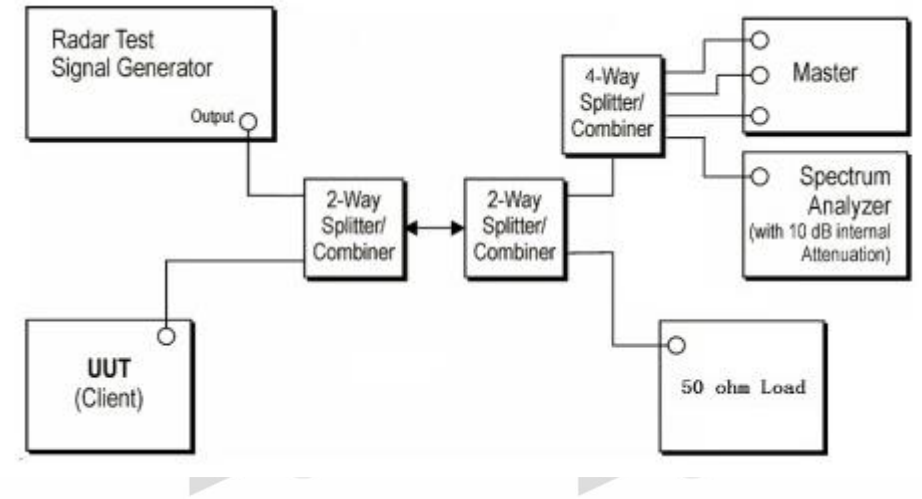

Note: 1. Use the software "Web" to set the frequency channel.

2. EUT is not support TPC and not with Radar detection.

Radar Waveform Calibration Result:

Radar Type 0

Test Graphs
5320MHz DFS_FCC_T0

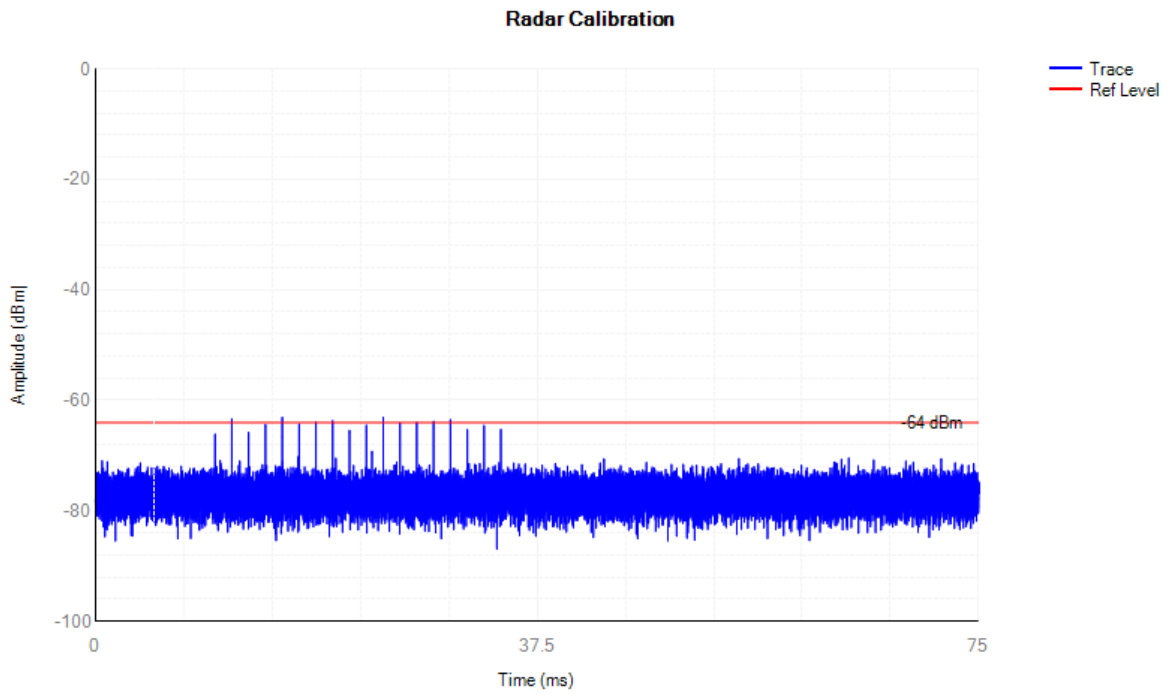

11.5. Channel closing transmission time, channel move time and non-occupancy period

Block diagram of test setup Test Procedure:

(1) The radar pulse generator is setup to provide a pulse at frequency that the master and client are operating. A type 0 radar pulse with a 1us pulse width and a 1428us PRI is used for the testing.

(2) The vector signal generator is adjusted to provide the radar burst (18 pulses) at the level of approximately -64dBm at the antenna port of the master device.

(3) A trigger is provided from the pulse generator to the DFS monitoring system in order to capture the traffic and the occurrence of the radar pulse.

(4) EUT will associate with the master at channel. The file “iperf.exe” specified by the FCC is streamed from the PC 2 through the master and the client device to the PC 1 and played in full motion video using Test Software in order to properly load the network for the entire period of the test.

(5) When radar burst with a level equal to the DFS Detection Threshold +1dB is generated on the operating channel of the U-NII device. At time T0 the radar waveform generator sends a burst of pulse of the radar waveform at Detection Threshold +1dB.

(6) Observe the transmissions of the EUT at the end of the radar Burst on the Operating Channel. Measure and record the transmissions from the UUT during the observation time (Channel Move Time). One 15 seconds plot is reported for the Short Pulse Radar Type 0. The plot for the Short Pulse Radar Types start at the end of the radar burst. The Channel Move Time will be calculated based on the zoom in 600ms plot of the Short Pulse Radar Type.

(7) Measurement of the aggregate duration of the Channel Closed Transmission Time method. With the

(8) spectrum analyzer set to zero span tuned to the center frequency of the EUT operating channel at the radar simulated frequency, peak detection, and max hold, the dwell time per bin is given by: Dwell (0.3ms) =S (12000ms) / B (4000); where Dwell is the dwell time per spectrum analyzer sampling bin, S is sweep time and B is the number of spectrum analyzer sampling bins. An upper bound of the aggregate duration of the intermittent control signals of Channel Closing Transmission Time is calculated by: C (ms)= N X Dwell (0.3ms); where C is the Closing Time, N is the number of spectrum analyzer sampling bins (intermittent control signals) showing a U-NII transmission and Dwell is the dwell time per bin.

Measurement the EUT for more than 30 minutes following the channel move time to verify that no transmission or beacons occur on this channel.

11.6. Test setup

Setup for Client with injection at the Master

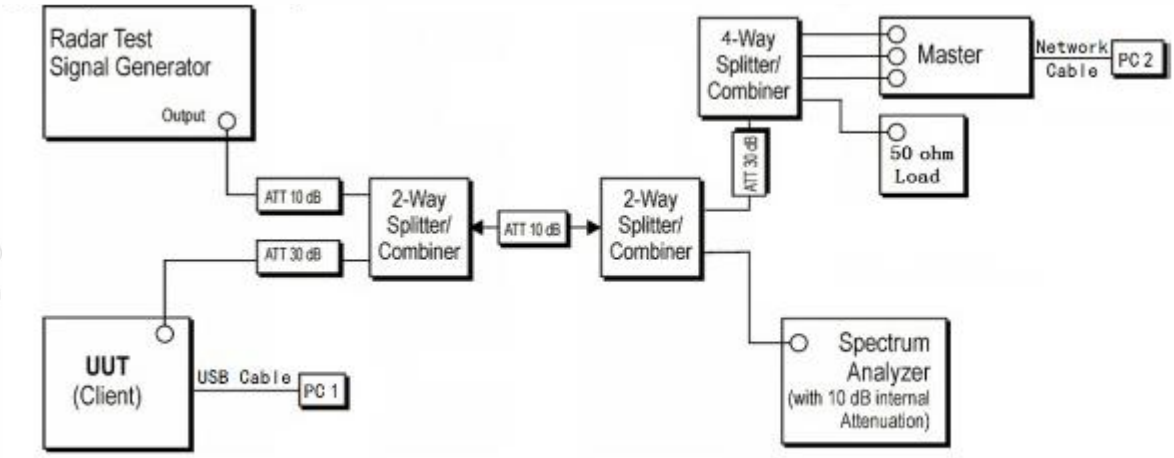

11.7. Test result

Frequency (MHz)	Channel Move Time (s)	Limit Channel Move Time (s)	Close Transmission Time (s)	Limit Close Transmission Time (s)	Close Transmission Time after 200ms(s)	Limit Close Transmission Time after 200ms (s)	Verdict
5320	0.8569	10	0.03	0.26	0.0056	0.06	Pass

BW/Channel	Test Item	Test Result	Limit	Results
5320MHz	Non-Occupancy Period	>30min	30min	pass

Test plots as follows:

Test Graphs
a 5320MHz Shutdown

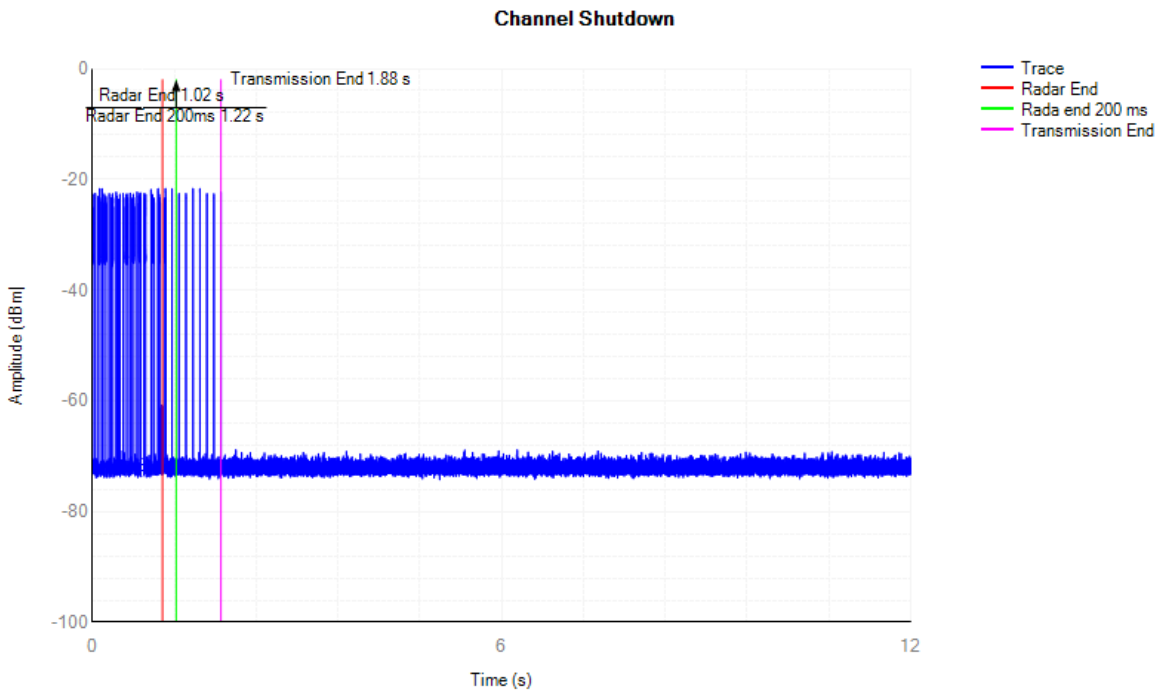

Test Graphs
a 5320MHz Non-Occupancy

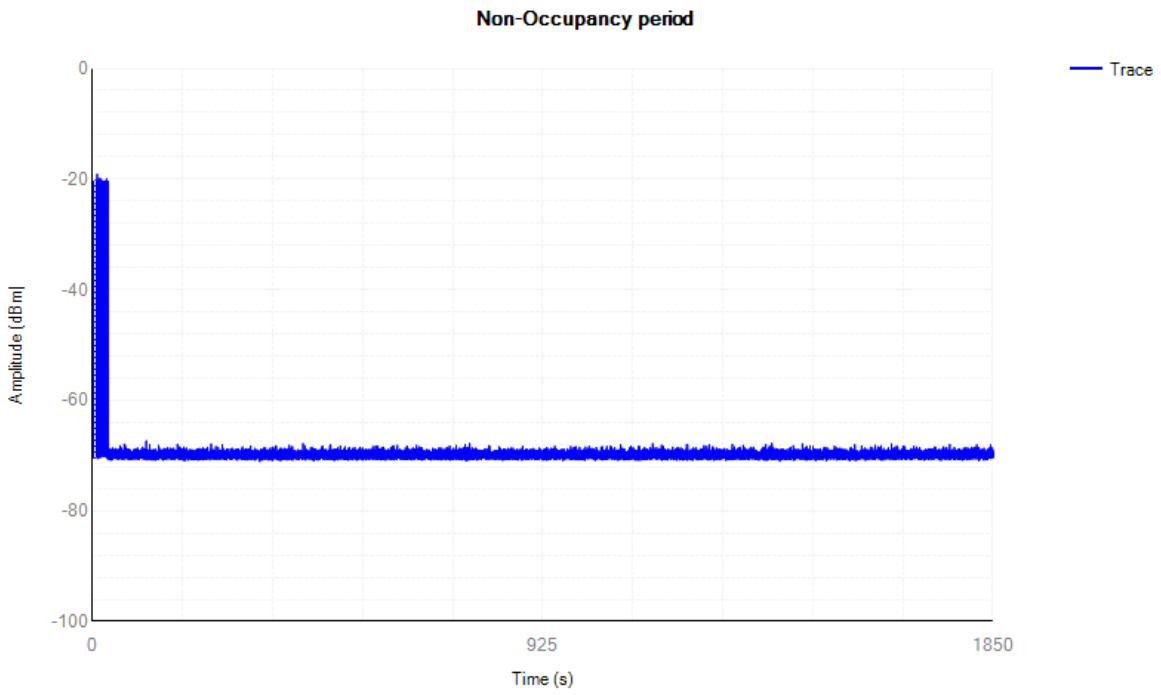

12. Test setup photograph

Please find the photos of EUT in APPENDIXES.

13. Photos of the EUT

Please find the photos of EUT in APPENDIXES.

END OF REPORT