FCC PART 27

FCC PART 22H, PART 24E

TEST REPORT

For

xia men gu chuang jiao yu zi xun you xian gong si

Room 433, No. 3, Xinfengsan Road, Torch Park, Torch High-tech Zone, Xiamen, China

FCC ID: 2BMG4-AI-M1

Report Type:	**Product Name:**
Original Report	4G LTE POC RADIO

Report Number:	2607Q38146E-RF-01
Report Date:	2026-07-08
Reviewed By:	Ash Lin
Approved By:	Miles Chen
Prepared By:	Bay Area Compliance Laboratories Corp. (Xiamen) Unit 102, No. 902 Meifeng South Road, Binhai West Avenue, Science and Technology Innovation Park, Torch High tech Zone XiaMen, People's Republic of China Tel: +86-592-3200111 www.baclcorp.com.cn

TABLE OF CONTENTS

REPORT REVISION HISTORY **3**

1. GENERAL INFORMATION **4**
1.1 PRODUCT DESCRIPTION FOR EQUIPMENT UNDER TEST (EUT) 4
1.2 ★OPERATION VOLTAGE (VDC): 4
1.3 ★ANTENNA INFORMATION 5
1.4 OBJECTIVE 5
1.5 MEASUREMENT UNCERTAINTY 6
1.6 TEST FACILITY 6

2. SYSTEM TEST CONFIGURATION **7**
2.1 JUSTIFICATION 7
2.2 CHANNEL LIST 7
2.3 EUT OPERATION CONDITION: 8
2.4 SUPPORT EQUIPMENT LIST AND DETAILS 10
2.5 EXTERNAL I/O CABLE 10
2.6 BLOCK DIAGRAM OF TEST SETUP 11

3. SUMMARY OF TEST RESULTS **12**

4. TEST EQUIPMENT LIST **13**

5. REQUIREMENTS AND TEST PROCEDURES **15**
5.1 APPLICABLE STANDARD FOR PART 22 SUBPART H: 15
5.1.1 RF Output Power *15*
5.1.2 Spurious Emissions *15*
5.1.3 Frequency stability *15*
5.2 APPLICABLE STANDARD FOR PART 24 SUBPART E: 16
5.2.1 RF Output Power *16*
5.2.2 Spurious Emissions *16*
5.2.3 Frequency stability *16*
5.3 APPLICABLE STANDARD FOR PART 27: 17
5.3.1 RF Output Power *17*
5.3.2 Spurious Emissions *18*
5.3.3 Frequency stability *19*
5.4 TEST METHOD: 20
5.4.1 Transmitter output power, e.r.p. and e.i.r.p *20*
5.4.2 Occupied Bandwidth *21*
5.4.3 Transmitter unwanted emissions-at antenna terminals *22*
5.4.4 Out of band emission *23*
5.4.5 Frequency stability *24*
5.4.6 Transmitter unwanted emissions-Radiated Spurious emissions *25*

6. TEST DATA AND RESULT **27**
6.1 LTE RF CONDUCTED DATA 27
6.2 RADIATED SPURIOUS EMISSIONS 28
6.2.1 30MHz~1GHz *28*
6.2.2 Above 1GHz *34*

7. EUT PHOTOGRAPHS **42**

8. TEST SETUP PHOTOGRAPHS **43**

REPORT REVISION HISTORY

Number of Revisions	Report No.	Version	Issue Date	Description
0	2607Q38146E-RF-01	R1V1	2026-07-08	Initial Issue

1. GENERAL INFORMATION

1.1 Product Description for Equipment under Test (EUT)

Applicant:	xia men gu chuang jiao yu zi xun you xian gong si
Product Name:	4G LTE POC RADIO
Tested Model:	AI-M1
Series Models:	RI-M1, FR-M1, M1
Trade Name:	AIRITON, FAST RADIO
Power Supply:	DC 5V from USB port or DC 3.7V from battery
RF Function:	LTE
Operating Band/Frequency:	LTE Band 2: 1850-1910 MHz(TX), 1930-1990MHz(RX) LTE Band 4: 1710-1755 MHz(TX), 2110-2155MHz(RX) LTE Band 5: 824-849 MHz(TX), 869-894 MHz(RX) LTE Band 7: 2500-2570 MHz(TX), 2620-2690 MHz(RX) LTE Band 12: 699-716MHz(TX), 729-746MHz(RX) LTE Band 13: 777-787MHz(TX), 746-756MHz(RX) LTE Band 17: 704-716MHz(TX), 734-746MHz(RX) LTE Band 38: 2570-2620MHz(TX), 2570-2620MHz(RX) LTE Band 41: 2496-2690MHz(TX), 2496-2690MHz(RX) LTE Band 66: 1710-1780 MHz(TX), 2110-2180 MHz(RX)
Modulation Type:	QPSK, 16QAM
EUT Received Status:	Good

Note:
1. The differences between the test model and the series models are as follows:

Tested Model(s)	*Series Models*	*Differences Items*	*Details*
AI-M1 (Trade Name:AIRITON)	*RI-M1 (Trade Name:AIRITON)*	*model name*	*All are the same except model name.*
	FR-M1, M1 (Trade Name:FAST RADIO)	*model name and trade name*	*All are the same except model name and trade name.*

please refer to declaration letter for more detail.
2. All measurement and test data in this report was gathered from production sample serial number: 3HIA-1 (RF conducted), 3HIA-2 (Radiated Spurious Emission) (Assigned by the BACL(Xiamen). The EUT supplied by the applicant was received on 2026-02-10)

1.2 ★Operation Voltage (Vdc):

Lowest:	3.33V	Normal:	3.7V	Highest:	4.07V

1.3 ★Antenna Information

Antenna Type	Operation Bands	Antenna Frequency Range (MHz)	Antenna Gain(G_T) (dBi)	L_C (dB)
FPC	LTE B2	1850-1910	2.2	0
	LTE B4	1710-1755	2.86	0
	LTE B5	824-849	-2.96	0
	LTE B7	2500-2570	1.79	0
	LTE B12	699-716	-7.55	0
	LTE B13	777-787	-4.71	0
	LTE B17	704-716	-7.55	0
	LTE B38	2570-2620	1.74	0
	LTE B41	2496-2690	2.70	0
	LTE B66	1710-1780	2.86	0

Note:
1. Lc= Signal Attenuation in the connecting cable between the transmitter and antenna, in dB.

1.4 Objective

This type approval report is prepared for *xia men gu chuang jiao yu zi xun you xian gong si* in accordance with Part 2, Part 22-Subpart H and Part 24-Subpart E and Part 27 of the Federal Communication Commission's rules.

The objective is to determine the compliance of EUT with FCC rules for output power, Peak-to-average Ratio (PAR), occupied bandwidth, and spurious emission at antenna terminal, spurious radiated emission, frequency stability, and band edge.

1.5 Measurement Uncertainty

Item		U_{lab}
Radiated Spurious Emission	30MHz~1GHz	4.68dB
	1GHz~18GHz	5.00dB
	18GHz~26.5GHz	4.90dB
	26.5GHz~40GHz	4.90dB
Occupied Bandwidth		1.69%
Conducted Spurious Emission		±2.92 dB
Transmitter Conducted Power(Conducted RF power)		±0.43 dB
Frequency Error(RF Frequency)		0.085×10^{-6}
Duty Cycle		±1%
Voltage		±1%
Temperature		±1.0℃
Humidity		±5%

Note: The extended uncertainty given in this report is obtained by combining the standard uncertainty times the coverage factor K with the 95% confidence interval. Otherwise required by the applicant or Product Regulations, Decision Rule in this report did not consider the uncertainty.

1.6 Test Facility

The Test site used by Bay Area Compliance Laboratories Corp. (Xiamen) to collect test data is located on the Unit 102, No. 902 Meifeng South Road, Binhai West Avenue, Science and Technology Innovation Park, Torch High tech Zone XiaMen, People's Republic of China

Bay Area Compliance Laboratories Corp. (Xiamen) Lab is accredited to ISO/IEC 17025 by A2LA (Certificate Number: 7134.01) and the lab has been recognized as the FCC accredited lab under the KDB 974614 D01, the FCC Designation No. : CN1384.

2. SYSTEM TEST CONFIGURATION

2.1 Justification

The EUT was configured for testing according to ANSI C63.26-2015.

The final qualification test was performed with the EUT operating at normal mode.

2.2 Channel List

The device operates on LTE Band 2/4/5/7/12/13/17/38/41/66; test was performed with channels as below table:

Frequency Bands	Bandwidth (MHz)	Test Frequency(MHz)		
		Low	Middle	High
LTE Band 2	1.4	1850.7	1880	1909.3
	3	1851.5	1880	1908.5
	5	1852.5	1880	1907.5
	10	1855	1880	1905
	15	1857.5	1880	1902.5
	20	1860	1880	1900
LTE Band 4	1.4	1710.7	1732.5	1754.3
	3	1711.5	1732.5	1753.5
	5	1712.5	1732.5	1752.5
	10	1715	1732.5	1750
	15	1717.5	1732.5	1747.5
	20	1720	1732.5	1745
LTE Band 5	1.4	824.7	836.5	848.3
	3	825.5	836.5	847.5
	5	826.5	836.5	846.5
	10	829	836.5	844
LTE Band 7	5	2502.5	2535	2567.5
	10	2505	2535	2565
	15	2507.5	2535	2562.5
	20	2510	2535	2560
LTE Band 12	1.4	699.7	707.5	715.3
	3	700.5	707.5	714.5
	5	701.5	707.5	713.5
	10	704.0	707.5	711.0
LTE Band 13	5	779.5	/	784.5
	10	/	782.0	/
LTE Band 17	5	706.5	710.0	713.5
	10	709.0	710.0	711.0
LTE Band 38	5	2572.5	2595.0	2617.5
	10	2575.0	2595.0	2615.0
	15	2577.5	2595.0	2612.5
	20	2580.0	2595.0	2610.0

Frequency Bands	Bandwidth (MHz)	Test Frequency(MHz)		
		Low	Middle	High
LTE Band 41	5	2498.5	2593	2687.5
	10	2501	2593	2685
	15	2503.5	2593	2682.5
	20	2506	2593	2680
LTE Band 66	1.4	1710.7	1745	1779.3
	3	1711.5	1745	1778.5
	5	1712.5	1745	1777.5
	10	1715	1745	1775
	15	1717.5	1745	1772.5
	20	1720	1745	1770

2.3 EUT Operation Condition:

EUT Operation Mode:	The system was configured for testing in each operation mode. LTE Category is 1, 16QAM only support up to maximum 27RB for bandwidths above 5MHz.
Equipment Modifications:	No
EUT Exercise Software:	No

Duty Cycle:

Test Mode:	Transmitting	**Test Engineer:**	Braylon Ma
Test Date:	2026-04-02	**Environment:**	Temp.: 21.8℃ Humi.: 55% Atm.: 100.1kPa

Mode	Ton (ms)	Ton+Toff (ms)	Duty Cycle (%)	Duty Cycle Factor(dB)
Band 38 5MHz	2.995	5.002	59.88	2.23
Band 38 10MHz	2.996	5.001	59.90	2.23
Band 38 15MHz	2.993	5.001	59.85	2.23
Band 38 20MHz	2.996	5.001	59.90	2.23
Band 41 5MHz	2.995	5.002	59.88	2.23
Band 41 10MHz	2.996	5.001	59.90	2.23
Band 41 15MHz	2.993	5.001	59.85	2.23
Band 41 20MHz	2.993	5.001	59.85	2.23

Note:
The Offset Value is the instrument compensation value.
Final Offset Value = Duty Cycle Factor+ Offset Value
The Final Offset Value needs to be used in the LTE B38/41 Bandedge test.

Band 38, Normal

5MHz_Middle_QPSK_25@0

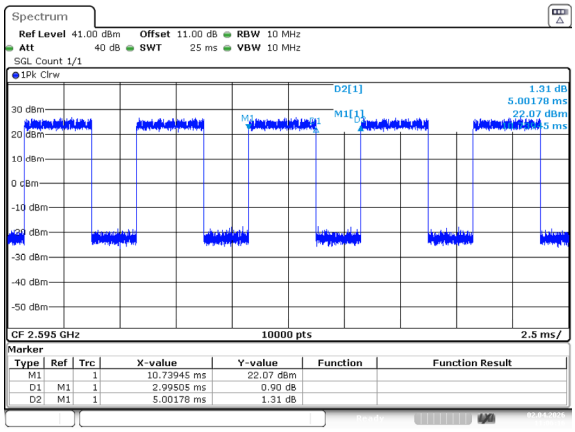

10MHz_Middle_QPSK_50@0

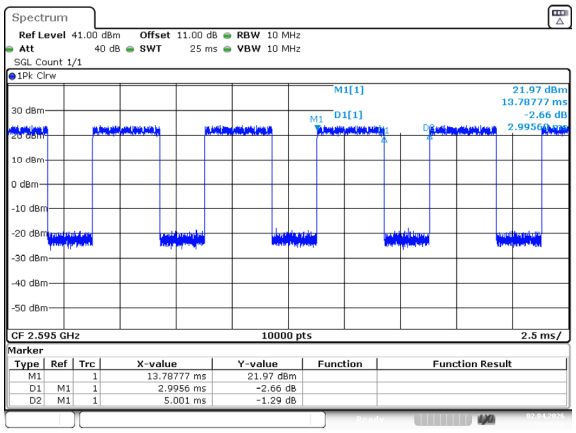

15MHz_Middle_QPSK_75@0

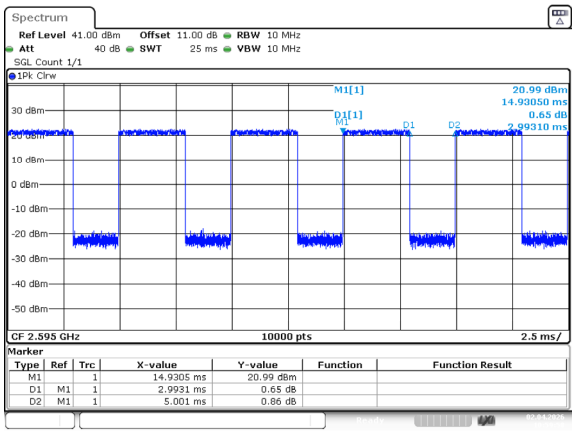

20MHz_Middle_QPSK_100@0

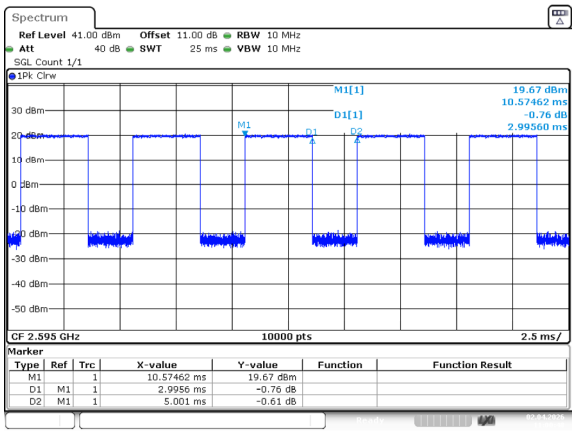

Band 41, Normal

5MHz_Middle_QPSK_25@0

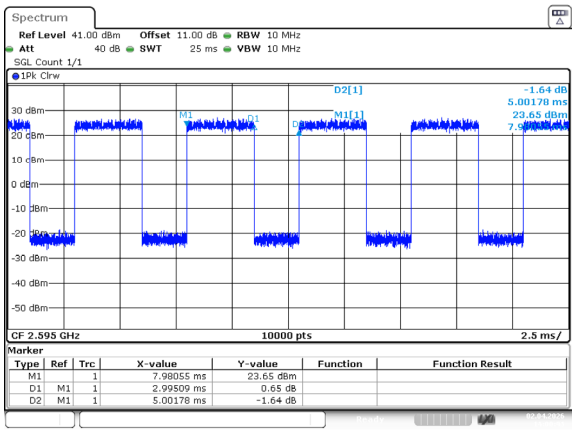

10MHz_Middle_QPSK_50@0

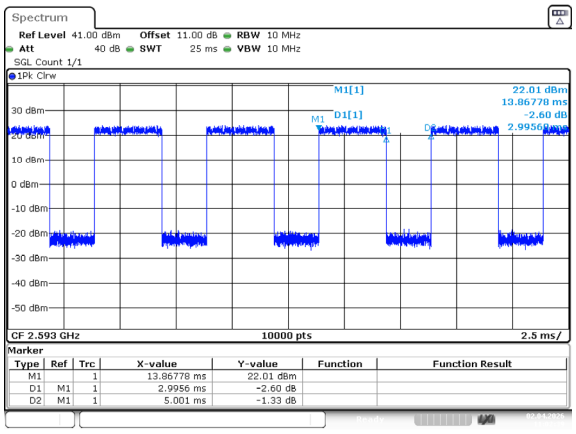

15MHz_Middle_QPSK_75@0

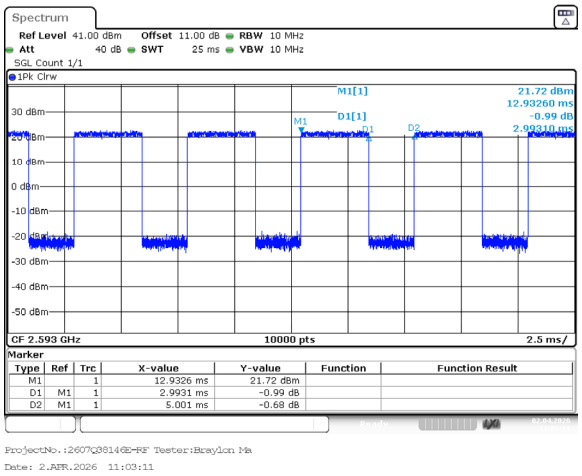

20MHz_Middle_QPSK_100@0

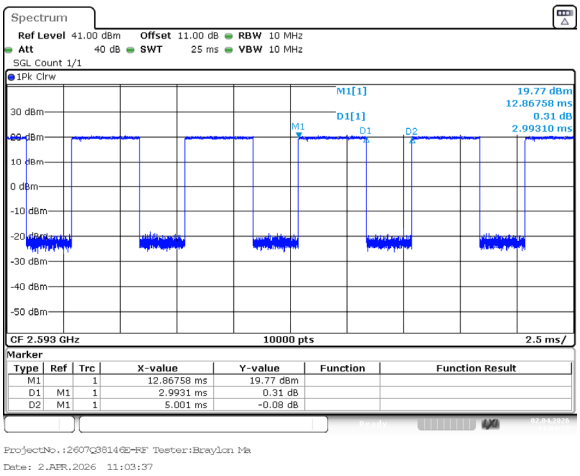

2.4 Support Equipment List and Details

Manufacturer	Description	Model	Serial Number
R&S	Wideband Radio Communication Tester	CMW500	122920
Unknown	Antenna	Unknown	Unknown
HONOR	Adapter	ADS-12EA-05	Unknown

2.5 External I/O Cable

Cable Description	Length (m)	From Port	To
Coaxial Cable	10	Antenna	CMW500
USB Cable	0.8	Adapter	EUT

2.6 Block Diagram of Test Setup

For Radiated Spurious Emission (Below 1GHz):

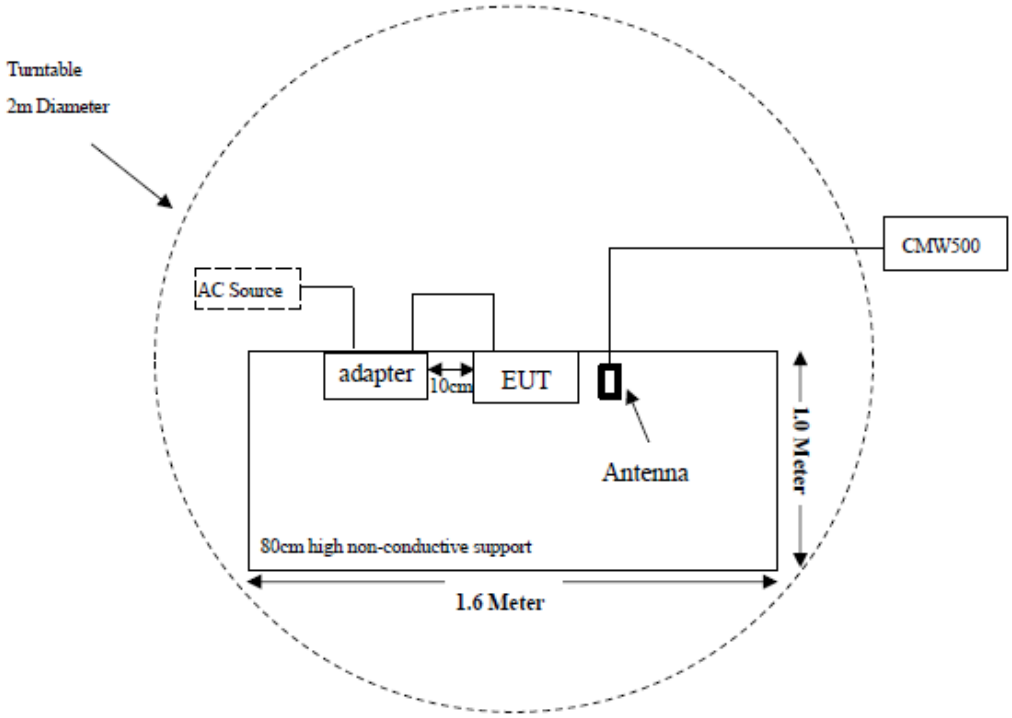

For Radiated Spurious Emission (Above 1GHz):

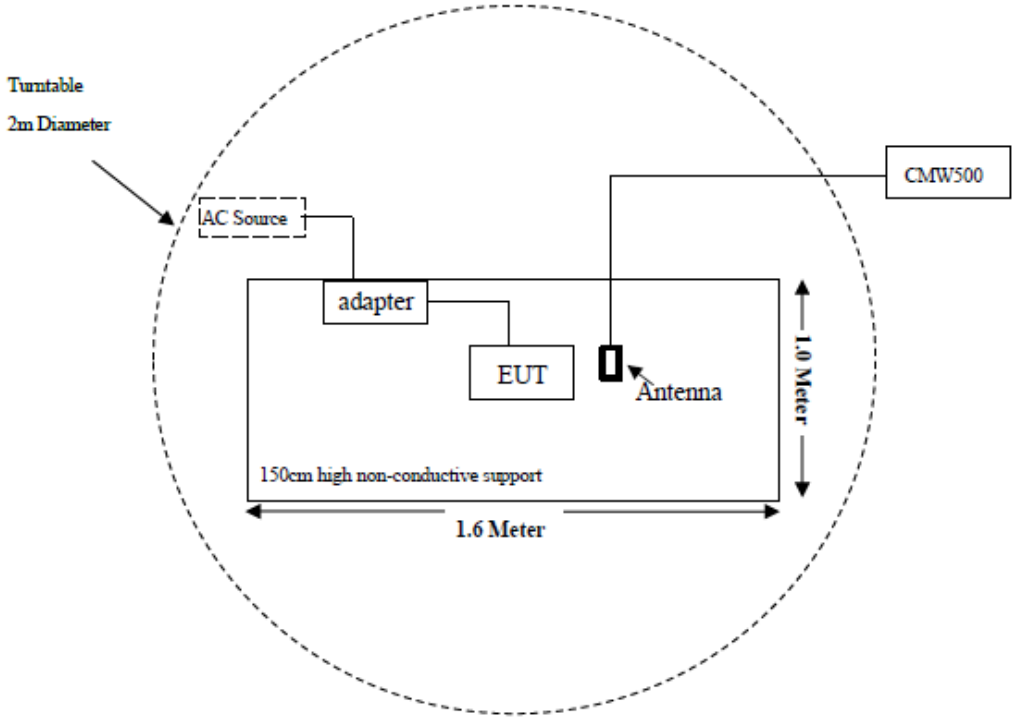

3. SUMMARY OF TEST RESULTS

FCC Rules	Description of Test	Result
FCC§2.1046; § 22.913; §24.232; §27.50	RF Output Power	Compliant
FCC§2.1046; § 24.232; §27.50; §22.913	Peak-to-average Ratio(PAR)	Compliant
FCC§2.1049; §22.905; §22.917; §24.238; §27.53	Occupied Bandwidth	Compliant
FCC§2.1051; §22.917; §24.238; §27.53	Spurious Emissions at Antenna Terminal	Compliant
FCC§2.1051; §24.238; §22.917; §27.53	Out of band emission, Band Edge	Compliant
FCC§2.1055; §27.54; §24.235; §22.355	Frequency stability vs. temperature & Frequency stability vs. voltage Compliance	Compliant
FCC§2.1053; §22.917; §27.53; §24.238	Radiated Spurious Emission	Compliant

4. TEST EQUIPMENT LIST

Test Equipment	Manufacturer	Model	Serial Number	Calibration Date	Calibration Due Date
Radiated Spurious Emissions 30 MHz to 1 GHz					
EMI Test Receiver	Rohde & Schwarz	ESR	103103	2026/01/21	2027/01/20
Antenna	Sunol Sciences	JB6	A122022-5	2026/5/12	2029/5/11
Amplifier	Sonoma	310B	120903	2026/01/22	2027/01/21
Coaxial Cable	XINHANGWEIBO	XH400T-N-4M	CC002	2026/01/20	2027/01/19
Coaxial Cable	XINHANGWEIBO	XH460B-N-2M	CC006	2026/01/20	2027/01/19
Coaxial Cable	XINHANGWEIBO	XH460B-N-12M	CC007	2026/01/20	2027/01/19
Microwave Analog Signal Generator	Agilent	N5183A	MY47420335	2026/01/21	2027/01/20
Dipole antenna	EMCO	3121C	9209-860	N/A	N/A
Wideband Radio Communication Tester	Rohde & Schwarz	CMW500	122920	2026/01/22	2027/01/20
Radiated Spurious Emissions Above 1 GHz					
Spectrum Analyzer	Rohde & Schwarz	FSV40-N	102051	2026/01/21	2027/01/20
Filter Switch Unit	Decentest	DT7220FSU	DS79904	2026/01/20	2027/01/19
Multiplex Switch Test Control Set	Decentest	DT7220SCU	DS79901	2026/01/20	2027/01/19
Horn Antenna	EMCO	3115	9002-3355	2024/11/19	2027/11/18
Double Ridge Guide Horn Antenna	A.H.Systems	SAS-571	1980	2026/5/12	2029/5/11
Preamplifier	GLOBAL	1313-A100M18G	4121301	2026/01/14	2027/01/13
Coaxial Cable	XINHANGWEIBO	XH800A-N-6M	CC003	2026/01/20	2027/01/19
Coaxial Cable	XINHANGWEIBO	XH800A-N-1M	CC005	2026/01/20	2027/01/19
Horn Antenna	EMCO	3116	9407-2232	2026/5/12	2029/5/11
Preamplifier	A.H.Systems	PAM-1840	200	2026/01/20	2027/01/19
Coaxial Cable	XINHANGWEIBO	XH360A-2.92-3M	CC008	2026/01/20	2027/01/19
Coaxial Cable	XINHANGWEIBO	XH360A-2.92-1M	CC009	2026/01/20	2027/01/19
Microwave Analog Signal Generator	Agilent	N5183A	MY47420335	2026/01/21	2027/01/20
Wideband Radio Communication Tester	Rohde & Schwarz	CMW500	122920	2026/01/22	2027/01/20
Waveguide Standard Gain Horn Antenna	PASTERNACK	PE9852/2F-20	11 20	2024/9/13	2027/9/12
Waveguide Standard Gain Horn Antenna	MILLITECH	SGH-Ka	WR-28	2024/9/13	2027/9/12

RF Conducted Test					
Spectrum Analyzer	Rohde & Schwarz	FSV40-N	102051	2026/01/21	2027/01/20
constant temperature and humidity testing machine	BACL	BTH-150-60	30234	2025/7/28	2026/7/27
Wideband Radio Communication Tester	Rohde & Schwarz	CMW500	122920	2026/1/22	2027/1/20
Attenuator	YINSAIGE	SMA-JK-10dB	N/A	Each time	N/A
Multimeter	Deli	DL8490	23930192	2026/1/21	2027/1/20
Directional coupler	narda	4226-20	08412	2026/1/22	2027/1/21
DC power supply	Maisheng	MS-606DS	2023115703	Each time	N/A
Coaxial Cable	Lianxun	RF113	N/A	Each time	N/A
Test Software	JD	JDAutoTestSystem	1.0.0.3813	N/A	N/A

Statement of Traceability: Bay Area Compliance Laboratories Corp. (Xiamen) attests that all calibrations have been performed in accordance to requirements that traceable to National Primary Standards and International System of Units (SI).

5. REQUIREMENTS AND TEST PROCEDURES

5.1 Applicable Standard for Part 22 Subpart H:

5.1.1 RF Output Power

FCC §22.913

(a)(5) The ERP of mobile transmitters and auxiliary test transmitters must not exceed 7watts.

(d) Power measurement. Measurement of the ERP of Cellular base transmitters and repeaters must be made using an average power measurement technique. The peak-to-average ratio (PAR) of the transmission must not exceed 13 dB. Power measurements for base transmitters and repeaters must be made in accordance with either of the following:
(1) A Commission-approved average power technique (see FCC Laboratory's Knowledge Database); or
(2) For purposes of this section, peak transmit power must be measured over an interval of continuous transmission using instrumentation calibrated in terms of an rms equivalent voltage. The measurement results shall be properly adjusted for any instrument limitations, such as detector response times, limited resolution bandwidth capability when compared to the emission bandwidth, sensitivity, etc., so as to obtain a true peak measurement for the emission in question over the full bandwidth of the channel.

5.1.2 Spurious Emissions

FCC §22.917

(a) Out of band emissions. The power of any emission outside of the authorized operating frequency ranges must be attenuated below the transmitting power (P) by a factor of at least 43 + 10 log(P) dB.

(b) Measurement procedure. Compliance with these rules is based on the use of measurement instrumentation employing a reference bandwidth as follows:
(1) In the spectrum below 1 GHz, instrumentation should employ a reference bandwidth of 100 kHz or greater. In the 1 MHz bands immediately outside and adjacent to the frequency block, a resolution bandwidth of at least one percent of the emission bandwidth of the fundamental emission of the transmitter may be employed. A narrower resolution bandwidth is permitted in all cases to improve measurement accuracy, provided that the measured power is integrated over the full required reference bandwidth (i.e., 100 kHz or 1 percent of emission bandwidth, as specified). The emission bandwidth is defined as the width of the signal between two points, one below the carrier center frequency and one above the carrier center frequency, outside of which all emissions are attenuated at least 26 dB below the transmitter power.
(2) In the spectrum above 1 GHz, instrumentation should employ a reference bandwidth of 1 MHz

5.1.3 Frequency stability

FCC §22.355

Except as otherwise provided in this part, the carrier frequency of each transmitter in the Public Mobile Services must be maintained within the tolerances given in Table C-1 of this section

Frequency range (MHz)	Base, fixed (ppm)	Mobile >3 watts (ppm)	Mobile ≤3 watts (ppm)
25 to 50	20	20	50
50 to 450	5	5	50
450 to 512	2.5	5	5
821 to 896	1.5	**2.5**	**2.5**
928 to 929	5	n/a	n/a
929 to 960	1.5	n/a	n/a
2110 to 2220	10	n/a	n/a

Table C-1 - Frequency Tolerance for Transmitters in the Public Mobile Services

5.2 Applicable Standard for Part 24 Subpart E:

5.2.1 RF Output Power

FCC §24.232

(c)Mobile and portable stations are limited to 2 watts EIRP and the equipment must employ a means for limiting power to the minimum necessary for successful communications.

(d)Power measurements for transmissions by stations authorized under this section may be made either in accordance with a Commission-approved average power technique or in compliance with paragraph (e) of this section. In both instances, equipment employed must be authorized in accordance with the provisions of § 24.51. In measuring transmissions in this band using an average power technique, the peak-to average ratio (PAR) of the transmission may not exceed 13 dB.

5.2.2 Spurious Emissions

FCC §24.238

The rules in this section govern the spectral characteristics of emissions in the Broadband Personal Communications Service.

(a) Out of band emissions. The power of any emission outside of the authorized operating frequency ranges must be attenuated below the transmitting power (P) by a factor of at least 43 + 10 log(P) dB.

(b) Measurement procedure. Compliance with these rules is based on the use of measurement instrumentation employing a resolution bandwidth of 1 MHz or greater. However, in the 1 MHz bands immediately outside and adjacent to the frequency block a resolution bandwidth of at least one percent of the emission bandwidth of the fundamental emission of the transmitter may be employed. A narrower resolution bandwidth is permitted in all cases to improve measurement accuracy provided the measured power is integrated over the full required measurement bandwidth (i.e. 1 MHz or 1 percent of emission bandwidth, as specified). The emission bandwidth is defined as the width of the signal between two points, one below the carrier center frequency and one above the carrier center frequency, outside of which all emissions are attenuated at least 26 dB below the transmitter power.

(c) Alternative out of band emission limit. Licensees in this service may establish an alternative out of band emission limit to be used at specified band edge(s) in specified geographical areas, in lieu of that set forth in this section, pursuant to a private contractual arrangement of all affected licensees and applicants. In this event, each party to such contract shall maintain a copy of the contract in their station files and disclose it to prospective assignees or transferees and, upon request, to the FCC.

(d) Interference caused by out of band emissions. If any emission from a transmitter operating in this service results in interference to users of another radio service, the FCC may require a greater attenuation of that emission than specified in this section. 4.2.3 Frequency stability FCC §24.235 The frequency stability shall be sufficient to ensure that the fundamental emission stays within the authorized frequency block.

5.2.3 Frequency stability

FCC §24.235

The frequency stability shall be sufficient to ensure that the fundamental emission stays within the authorized frequency block.

5.3 Applicable Standard For Part 27:

5.3.1 RF Output Power

FCC §27.50

(a) The following power limits and related requirements apply to stations transmitting in the 2305-2320 MHz band or the 2345-2360 MHz band.
(3) *Mobile and portable stations.*

(i) For mobile and portable stations transmitting in the 2305-2315 MHz band or the 2350-2360 MHz band, the average EIRP must not exceed 50 milliwatts within any 1 megahertz of authorized bandwidth, except that for mobile and portable stations compliant with 3GPP LTE standards or another advanced mobile broadband protocol that avoids concentrating energy at the edge of the operating band the average EIRP must not exceed 250 milliwatts within any 5 megahertz of authorized bandwidth but may exceed 50 milliwatts within any 1 megahertz of authorized bandwidth. For mobile and portable stations using time division duplexing (TDD) technology, the duty cycle must not exceed 38 percent in the 2305-2315 MHz and 2350-2360 MHz bands. Mobile and portable stations using FDD technology are restricted to transmitting in the 2305-2315 MHz band. Power averaging shall not include intervals in which the transmitter is off.
(ii) Mobile and portable stations are not permitted to transmit in the 2315-2320 MHz and 2345-2350 MHz bands.
(iii) Automatic transmit power control. Mobile and portable stations transmitting in the 2305-2315 MHz band or in the 2350-2360 MHz band must employ automatic transmit power control when operating so the stations operate with the minimum power necessary for successful communications.
(iv) Prohibition on external vehicle-mounted antennas. The use of external vehicle-mounted antennas for mobile and portable stations transmitting in the 2305-2315 MHz band or the 2350-2360 MHz band is prohibited.

(b) The following power and antenna height limits apply to transmitters operating in the 746-758 MHz, 775-788 MHz and 805-806 MHz bands:
(10) Portable stations (hand-held devices) transmitting in the 746-757 MHz, 776-788 MHz, and 805-806 MHz bands are limited to 3 watts ERP.

(c) The following power and antenna height requirements apply to stations transmitting in the 600 MHz band and the 698-746 MHz band:
(10) Portable stations (hand-held devices) in the 600 MHz uplink band and the 698-746 MHz band, and fixed and mobile stations in the 600 MHz uplink band are limited to 3 watts ERP.

(d) The following power and antenna height requirements apply to stations transmitting in the 1695-1710 MHz, 1710-1755 MHz, 1755-1780 MHz, 1915-1920 MHz, 1995-2000 MHz, 2000-2020 MHz, 2110-2155 MHz, 2155-2180 MHz and 2180-2200 MHz bands:
(4) Fixed, mobile, and portable (hand-held) stations operating in the 1710-1755 MHz band and mobile and portable stations operating in the 1695-1710 MHz and 1755-1780 MHz bands are limited to 1 watt EIRP. Fixed stations operating in the 1710-1755 MHz band are limited to a maximum antenna height of 10 meters above ground. Mobile and portable stations operating in these bands must employ a means for limiting power to the minimum necessary for successful communications.

(5) Equipment employed must be authorized in accordance with the provisions of § 24.51. Power measurements for transmissions by stations authorized under this section may be made either in accordance with a Commission-approved average power technique or in compliance with paragraph(d)(6) of this section. In measuring transmissions in this band using an average power technique, the peak-to-average ratio (PAR) of the transmission may not exceed 13 dB.

(h) The following power limits shall apply in the BRS and EBS:
(2)Mobile and other user stations. Mobile stations are limited to 2.0 watts EIRP. All user stations are limited to 2.0 watts transmitter output power.

(k) The following power requirements apply to stations transmitting in the 3450-3550 MHz band:
(3) Mobile devices are limited to 1Watt (30 dBm) EIRP. Mobile devices operating in these bands must employ a means for limiting power to the minimum necessary for successful communications.
(4) Equipment employed must be authorized in accordance with the provisions of § 27.51. Power measurements for transmissions by stations authorized under this section may be made either in accordance with a Commission-approved average power technique or in compliance with paragraph (k)(5) of this section. In measuring transmissions in this band using an average power technique, the peak-to-average ratio (PAR) of the transmission may not exceed 13 dB.

5.3.2 Spurious Emissions

FCC §27.53

(a) For operations in the 2305-2320 MHz band and the 2345-2360 MHz band, the power of any emission outside a licensee's frequency band(s) of operation shall be attenuated below the transmitter power P (with averaging performed only during periods of transmission) within the licensed band(s) of operation, in watts, by the following amounts:
(4)For mobile and portable stations operating in the 2305-2315 MHz and 2350-2360 MHz bands:

(i) By a factor of not less than: 43 + 10 log (P) dB on all frequencies between 2305 and 2320 MHz and on all frequencies between 2345 and 2360 MHz that are outside the licensed band(s) of operation, not less than 55 + 10 log (P) dB on all frequencies between 2320 and 2324 MHz and on all frequencies between 2341 and 2345 MHz, not less than 61 + 10 log (P) dB on all frequencies between 2324 and 2328 MHz and on all frequencies between 2337 and 2341 MHz, and not less than 67 + 10 log (P) dB on all frequencies between 2328 and 2337 MHz;

(ii) By a factor of not less than 43 + 10 log (P) dB on all frequencies between 2300 and 2305 MHz, 55 + 10 log (P) dB on all frequencies between 2296 and 2300 MHz, 61 + 10 log (P) dB on all frequencies between 2292 and 2296 MHz, 67 + 10 log (P) dB on all frequencies between 2288 and 2292 MHz, and 70 + 10 log (P) dB below 2288 MHz;

(iii) By a factor of not less than 43 + 10 log (P) dB on all frequencies between 2360 and 2365 MHz, and not less than 70 + 10 log (P) dB above 2365 MHz.

(c)For operations in the 746-758 MHz band and the 776-788 MHz band, the power of any emission outside the licensee's frequency band(s) of operation shall be attenuated below the transmitter power (P) within the licensed band(s) of operation, measured in watts, in accordance with the following:

(1) On any frequency outside the 746-758 MHz band, the power of any emission shall be attenuated outside the band below the transmitter power (P) by at least 43 + 10 log (P) dB;

(2) On any frequency outside the 776-788 MHz band, the power of any emission shall be attenuated outside the band below the transmitter power (P) by at least 43 + 10 log (P) dB;

(3) On all frequencies between 763-775 MHz and 793-805 MHz, by a factor not less than 76 + 10 log (P) dB in a 6.25 kHz band segment, for base and fixed stations;

(4) On all frequencies between 763-775 MHz and 793-805 MHz, by a factor not less than 65 + 10 log (P) dB in a 6.25 kHz band segment, for mobile and portable stations;

(5) Compliance with the provisions of paragraphs (c)(1) and (c)(2) of this section is based on the use of measurement instrumentation employing a resolution bandwidth of 100 kHz or greater. However, in the 100 kHz bands immediately outside and adjacent to the frequency block, a resolution bandwidth of at least 30 kHz may be employed;

(6) Compliance with the provisions of paragraphs (c)(3) and (c)(4) of this section is based on the use of measurement instrumentation such that the reading taken with any resolution bandwidth setting should be adjusted to indicate spectral energy in a 6.25 kHz segment.

(f) For operations in the 746-758 MHz, 775-788 MHz, and 805-806 MHz bands, emissions in the band 1559-1610 MHz shall be limited to − 70 dBW/MHz equivalent isotropically radiated power (EIRP) for wideband signals, and − 80 dBW EIRP for discrete emissions of less than 700 Hz bandwidth. For the purpose of equipment authorization, a transmitter shall be tested with an antenna that is representative of the type that will be used with the equipment in normal operation.

(g) For operations in the 600 MHz band and the 698-746 MHz band, the power of any emission outside a licensee's frequency band(s) of operation shall be attenuated below the transmitter power (P) within the licensed band(s) of operation, measured in watts, by at least 43 + 10 log (P) dB. Compliance with this provision is based on the use of measurement instrumentation employing a resolution bandwidth of 100 kilohertz or greater. However, in the 100 kilohertz bands immediately outside and adjacent to a licensee's frequency block, a resolution bandwidth of at least 30 kHz may be employed.

(h) AWS emission limits
(1) **General protection levels.** Except as otherwise specified below, for operations in the 1695-1710 MHz, 1710-1755 MHz, 1755-1780 MHz, 1915-1920 MHz, 1995-2000 MHz, 2000-2020 MHz, 2110-2155 MHz, 2155-2180 MHz, and 2180-2200 bands, the power of any emission outside a licensee's frequency block shall be attenuated below the transmitter power (P) in watts by at least 43 + 10 log10 (P) dB.

(m)(4) For mobile digital stations, the attenuation factor shall be not less than 40 + 10 log (P) dB on all frequencies between the channel edge and 5 megahertz from the channel edge, 43 + 10 log (P) dB on all frequencies between 5 megahertz and X megahertz from the channel edge, and 55 + 10 log (P) dB on all frequencies more than X megahertz from the channel edge, where X is the greater of 6 megahertz or the actual emission bandwidth as defined in paragraph (m)(6) of this section. In addition, the attenuation factor shall not be less that 43 + 10 log (P) dB on all frequencies between 2490.5 MHz and 2496 MHz and 55 + 10 log (P) dB at or below 2490.5 MHz. Mobile Satellite Service licensees operating on frequencies below

2495 MHz may also submit a documented interference complaint against BRS licensees operating on channel BRS Channel 1 on the same terms and conditions as adjacent channel BRS or EBS licensees.

5.3.3 Frequency stability

FCC §27.54

The frequency stability shall be sufficient to ensure that the fundamental emissions stay within the authorized bands of operation.

5.4 Test Method:

5.4.1 Transmitter output power, e.r.p. and e.i.r.p

According to CFR Part 2.1046, ANSI C63.26-2015 Section 5.2.5.5:

The relevant equation for determining the ERP or EIRP from the conducted RF output power measured using the guidance provided above is:

$$\text{ERP or EIRP} = P_{Meas} + G_T - L_C$$

Where:

ERP or EIRP=effective radiated power or equivalent isotropically radiated power, respectively (expressed in the same units as P_{Meas}, typically dBW or dBm);
P_{Meas} = measured transmitter output power or PSD, in dBm or dBW;
G_T =gain of the transmitting antenna, in dBd (ERP) or dBi (EIRP);
L_C =signal attenuation in the connecting cable between the transmitter and antenna, in dB.

Test Setup Block:

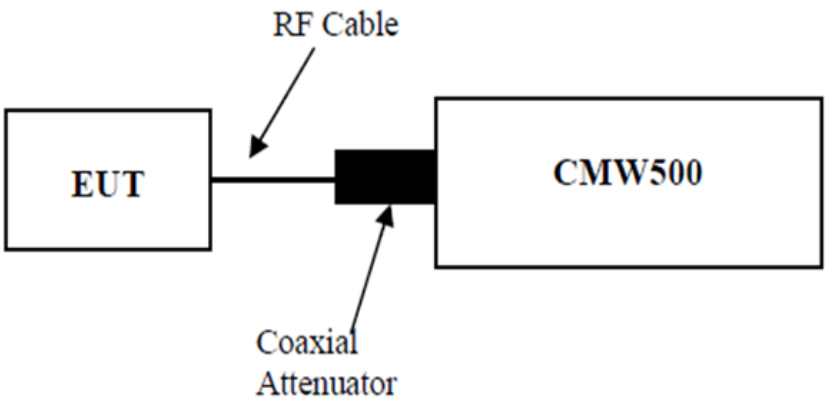

Note: The Insertion loss of the RF cable and coaxial Attenuator was offset into the Reading of CMW500.

5.4.2 Occupied Bandwidth

According to CFR Part 2.1049, ANSI C63.26-2015 Section 5.4.4

The OBW is the frequency bandwidth such that, below its lower and above its upper frequency limits, the mean powers are each equal to 0.5% of the total mean power of the given emission.

The following procedure shall be used for measuring (99%) power bandwidth:

a) The spectrum analyzer center frequency is set to the nominal EUT channel center frequency. The frequency span for the spectrum analyzer shall be set wide enough to capture all modulation products including the emission skirts (typically a span of 1.5 × OBW is sufficient).

b) The nominal IF filter 3 dB bandwidth (RBW) shall be in the range of 1% to 5% of the anticipated OBW, and the VBW shall be set ≥ 3 × RBW.

c) Set the reference level of the instrument as required to prevent the signal amplitude from exceeding the maximum spectrum analyzer input mixer level for linear operation. See guidance provided in4.2.3.
NOTE—Step a), step b), and step c) may require iteration to adjust within the specified tolerances.

d) Set the detection mode to peak, and the trace mode to max-hold.

e) If the instrument does not have a 99% OBW function, recover the trace data points and sum directly in linear power terms. Place the recovered amplitude data points, beginning at the lowest frequency, in a running sum until 0.5% of the total is reached. Record that frequency as the lower OBW frequency. Repeat the process until 99.5% of the total is reached and record that frequency as the upper OBW frequency. The 99% power OBW can be determined by computing the difference these two frequencies.

f) The OBW shall be reported and plot(s) of the measuring instrument display shall be provided with the test report. The frequency and amplitude axis and scale shall be clearly labeled. Tabular data can be reported in addition to the plot(s).

Test Setup Block:

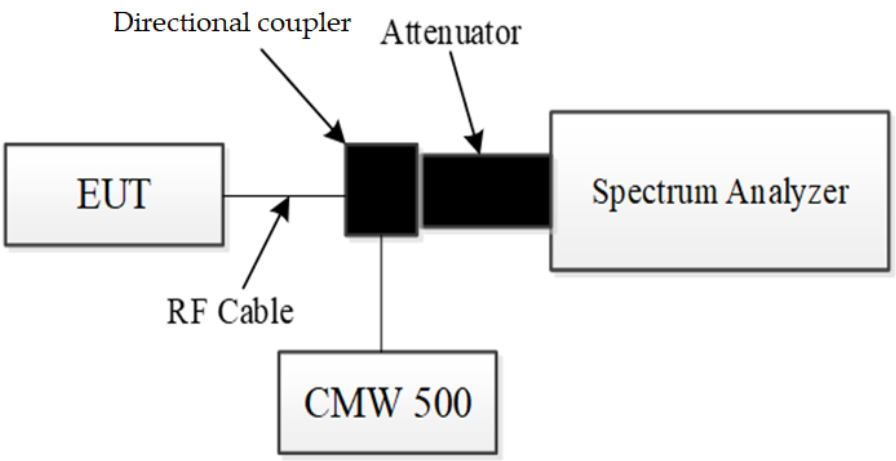

Note: The Insertion loss of the RF cable, directional coupler and coaxial Attenuator was offset into the level of Spectrum Analyzer.

5.4.3 Transmitter unwanted emissions-at antenna terminals

According to ANSI C63.26-2015 Section 5.7.4:

the applicable rule part specifies the reference bandwidth for measuring unwanted emission levels (typically, 100 kHz if the authorized frequency band/block is at or below 1 GHz and 1 MHz if the authorized frequency band/block is above 1 GHz),8 effectively depicting the unwanted emission limit in terms of a power spectral density. In those cases where no reference bandwidth is explicitly specified, the values in the preceding sentence should be used.

Test Setup Block:

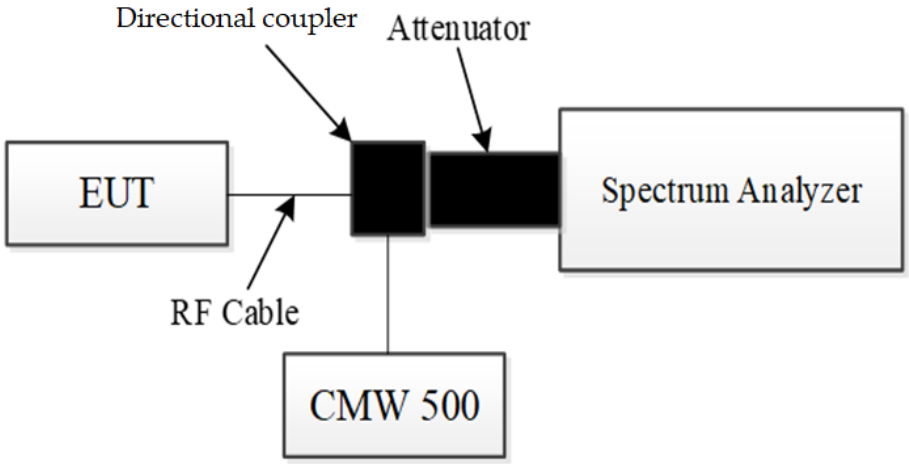

Note: The Insertion loss of the RF cable, directional coupler and coaxial Attenuator was offset into the level of Spectrum Analyzer.

5.4.4 Out of band emission

According to ANSI C63.26-2015 Section 5.7.3:

Typically, a measurement (resolution) bandwidth smaller than the reference bandwidth is allowed for measurements within a specified frequency range at the edge of the authorized frequency block/band (e.g., within the first Y MHz outside of the authorized frequency band/block, where the value of Y is specified in the relevant rule part). Some FCC out-of-band emission rules permit the use of a narrower RBW (typically limited to a minimum RBW of 1 % of the OBW) for measuring the out-of-band emissions without a requirement to integrate the result over the full reference bandwidth. Beyond the specified frequency range in which this relaxation of the uniform reference bandwidth is permitted, it typically is also acceptable to use a narrower RBW (again limited to a minimum of 1 % of OBW) to increase accuracy, but the measurement result must subsequently be integrated over the full reference bandwidth.

Test Setup Block:

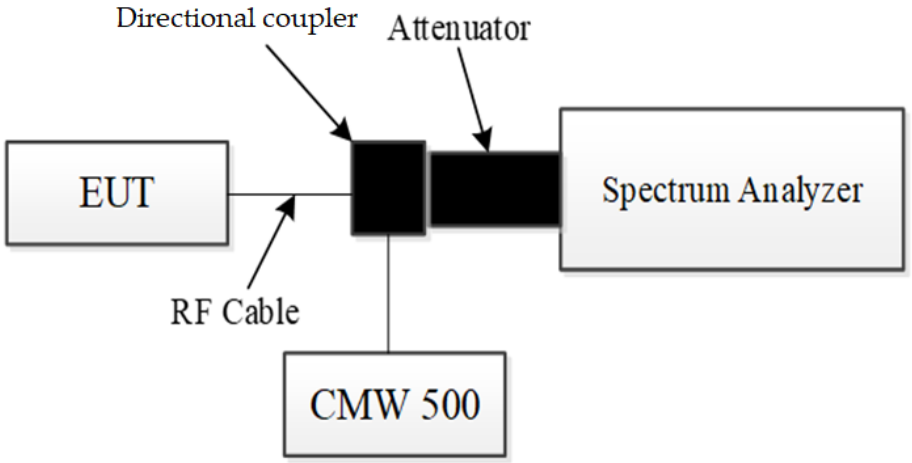

Note: The Insertion loss of the RF cable, directional coupler and coaxial Attenuator was offset into the level of Spectrum Analyzer.

5.4.5 Frequency stability

According to ANSI C63.26-2015 Section 5.6:

Frequency stability is a measure of the frequency drift due to temperature and supply voltage variations, with reference to the frequency measured at +20 °C and rated supply voltage.

The operating carrier frequency shall be set up in accordance with the manufacturer's published operation and instruction manual prior to the commencement of these tests. No adjustment of any frequency determining circuit element shall be made subsequent to this initial set-up. Frequency stability is tested:

a) At 10 °C intervals of temperatures between −30 °C and +50 °C at the manufacturer's rated supply voltage, and

b) At +20 °C temperature and ±15% supply voltage variations. If a product is specified to operate over a range of input voltage, then the −15% variation is applied to the lowermost voltage and the +15% is applied to the uppermost voltage.

During the test all necessary settings, adjustments and control of the EUT have to be performed without disturbing the test environment, i.e., without opening the environmental chamber. The frequency stabilities can be maintained to a lesser temperature range provided that the transmitter is automatically inhibited from operating outside the lesser temperature range. For handheld equipment that is only capable of operating from internal batteries and the supply voltage cannot be varied, the frequency stability tests shall be performed at the nominal battery voltage and the battery end point voltage specified by the manufacturer. An external supply voltage can be used and set at the internal battery nominal voltage, and again at the battery operating end point voltage which shall be specified by the equipment manufacturer.

If an unmodulated carrier is not available, the mean frequency of a modulated carrier can be obtained by using a frequency counter with gating time set to an appropriately large multiple of bit periods (gating time depending on the required accuracy). Full details on the choice of values shall be included in the test report.

Test Setup Block:

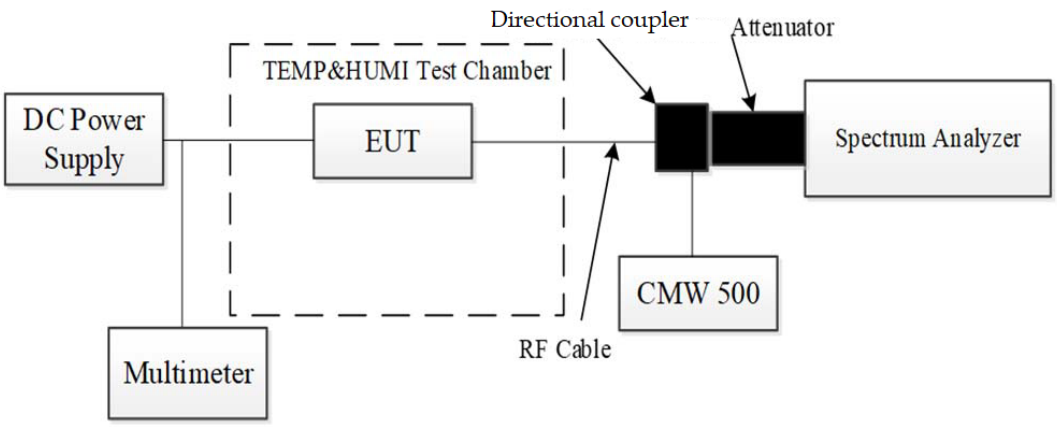

Note: The Insertion loss of the RF cable, directional coupler and coaxial Attenuator was offset into the level of Spectrum Analyzer.

5.4.6 Transmitter unwanted emissions-Radiated Spurious emissions

According to ANSI C63.26-2015 Section 5.5.3:

Test setup:

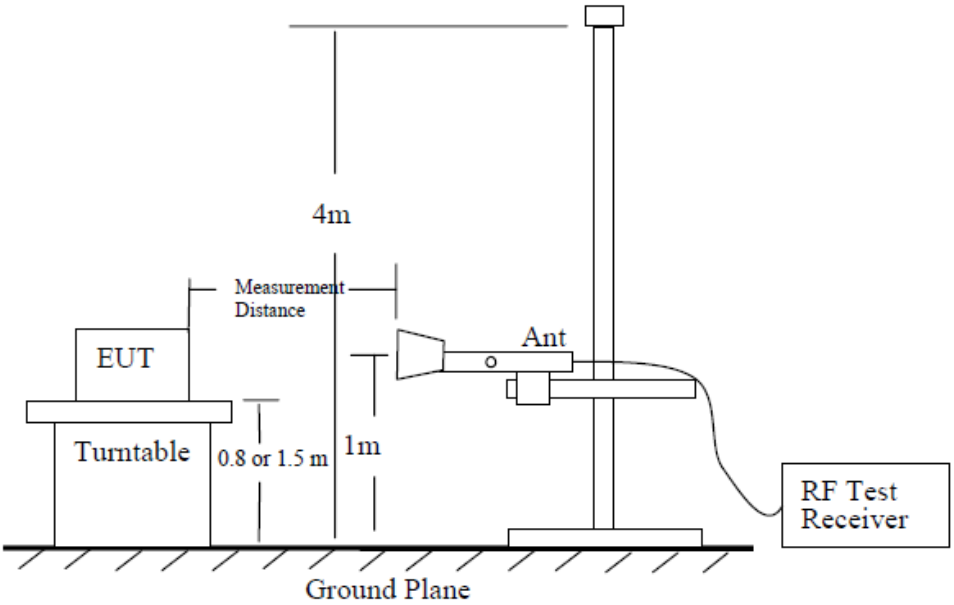

Figure 6 —Test site-up for radiated ERP and/or EIRP measurements

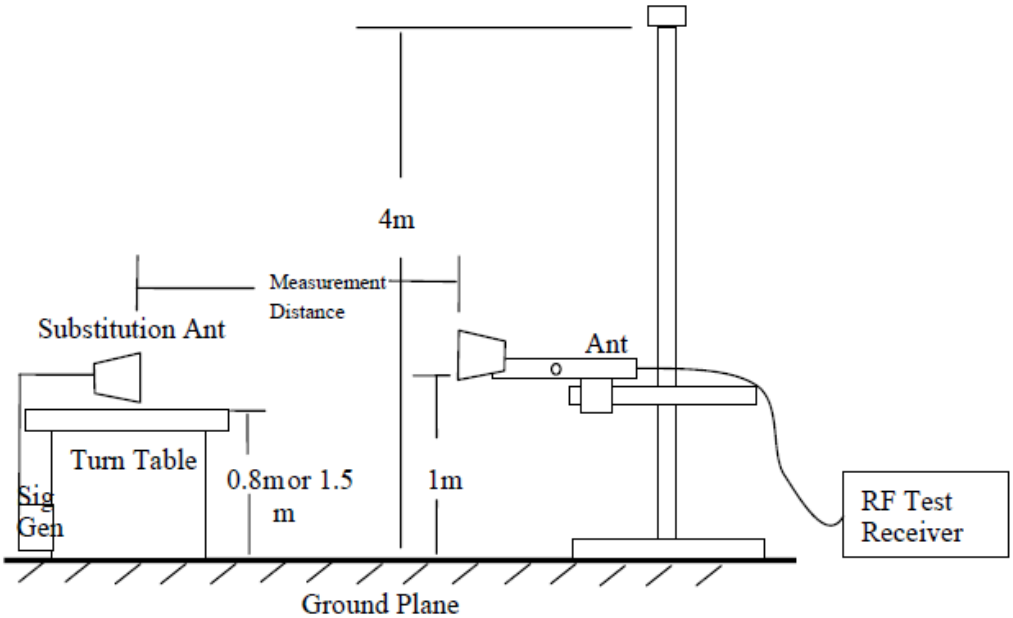

Figure 7 —Substitution method set-up for radiated emission

Test Procedure:

a) Place the EUT in the center of the turntable. The EUT shall be configured to transmit into the standard non-radiating load (for measuring radiated spurious emissions), connected with cables of minimal length unless specified otherwise. If the EUT uses an adjustable antenna, the antenna shall be positioned to the length that produces the worst case emission at the fundamental operating frequency.

b) Each emission under consideration shall be evaluated:

1) Raise and lower the measurement antenna in accordance 5.5.2, as necessary to enable detection of the maximum emission amplitude relative to measurement antenna height.

2) Rotate the EUT through 360° to determine the maximum emission level relative to the axial position.

3) Return the turntable to the azimuth where the highest emission amplitude level was observed.

4) Vary the measurement antenna height again through 1 m to 4 m again to find the height associated with the maximum emission amplitude.

5) Record the measured emission amplitude level and frequency using the appropriate RBW.

c) Repeat step b) for each emission frequency with the measurement antenna oriented in both the horizontal and vertical polarizations to determine the orientation that gives the maximum emissions amplitude.

d) Set-up the substitution measurement with the reference point of the substitution antenna located as near as possible to where the center of the EUT radiating element was located during the initial EUT measurement.

e) Maintain the previous measurement instrument settings and test set-up, with the exception that the EUT is removed and replaced by the substitution antenna.

f) Connect a signal generator to the substitution antenna; locate the signal generator so as to minimize any potential influences on the measurement results. Set the signal generator to the frequency where emissions are detected, and set an output power level such that the radiated signal can be detected by the measurement instrument, with sufficient dynamic range relative to the noise floor.

g) For each emission that was detected and measured in the initial test [i.e., in step b) and step c)]:

1) Vary the measurement antenna height between 1 m to 4 m to maximize the received (measured) signal amplitude.

2) Adjust the signal generator output power level until the amplitude detected by the measurement instrument equals the amplitude level of the emission previously measured directly in step b) and step c).

3) Record the output power level of the signal generator when equivalence is achieved in step 2).

h) Repeat step e) through step g) with the measurement antenna oriented in the opposite polarization.

i) Calculate the emission power in dBm referenced to a half-wave dipole using the following equation:

$$Pe = Ps(dBm) - \text{cable loss (dB)} + \text{antenna gain (dBd)}$$

where

Pe = equivalent emission power in dBm
Ps = source (signal generator) power in dBm

NOTE—dBd refers to the measured antenna gain in decibels relative to a half-wave dipole.

6. TEST DATA AND RESULT

6.1 LTE RF Conducted Data

Please refer to the attachment Appendix A for detail test data.

6.2 Radiated Spurious Emissions

Frequency Range:	Below 1 GHz	Above 1 GHz
Temperature:	22.9°C	23.4°C
Relative Humidity:	57%	54%
ATM Pressure:	100.1kPa	100.1kPa
Test Date:	2026-06-30	2026-06-29
Test Engineer:	Wlif Wu	Wlif Wu

Pre-scan in the X, Y and Z axes of orientation, the worst case Z-axis of orientation was recorded.

6.2.1 30MHz~1GHz

Test Data

Note: The worst modulation and bandwidth is as below:

FDD-LTE Band 2:

Frequency (MHz)	Polar (H/V)	Receiver Reading (dBμV)	Substituted Method			Absolute Level (dBm)	Limit (dBm)	Margin (dB)
			Substituted Level (dBm)	Antenna Gain (dBd)	Cable Loss (dB)			
1.4MHz QPSK RB1#0, Frequency: 1850.7MHz								
100.08	H	35.35	-79.35	0.00	0.20	-79.55	-13.00	66.55
384.00	V	31.95	-74.76	0.00	0.32	-75.08	-13.00	62.08
175.26	H	34.61	-75.00	0.00	0.24	-75.24	-13.00	62.24
634.07	V	31.34	-67.57	0.00	0.39	-67.96	-13.00	54.96
1.4MHz QPSK RB1#0, Frequency: 1880MHz								
102.99	H	35.41	-79.11	0.00	0.20	-79.31	-13.00	66.31
384.16	V	33.23	-73.47	0.00	0.32	-73.79	-13.00	60.79
179.68	H	35.41	-73.83	0.00	0.24	-74.07	-13.00	61.07
635.84	V	31.55	-67.17	0.00	0.39	-67.56	-13.00	54.56
1.4MHz QPSK RB1#0, Frequency: 1909.3MHz								
101.06	H	36.53	-78.11	0.00	0.20	-78.31	-13.00	65.31
386.74	V	32.86	-73.75	0.00	0.32	-74.07	-13.00	61.07
177.74	H	36.07	-73.33	0.00	0.24	-73.57	-13.00	60.57
637.43	V	31.56	-67.00	0.00	0.39	-67.39	-13.00	54.39

FDD-LTE Band 4:

Frequency (MHz)	Polar (H/V)	Receiver Reading (dBµV)	Substituted Method			Absolute Level (dBm)	Limit (dBm)	Margin (dB)
			Substituted Level (dBm)	Antenna Gain (dBd)	Cable Loss (dB)			
1.4MHz QPSK RB1#0 , Frequency: 1710.7MHz								
105.05	H	35.86	-78.54	0.00	0.20	-78.74	-13.00	65.74
386.55	V	32.59	-74.03	0.00	0.32	-74.35	-13.00	61.35
177.08	H	34.83	-74.62	0.00	0.24	-74.86	-13.00	61.86
634.53	V	31.76	-67.10	0.00	0.39	-67.49	-13.00	54.49
1.4MHz QPSK RB1#0, Frequency: 1732.5MHz								
103.29	H	36.17	-78.34	0.00	0.20	-78.54	-13.00	65.54
387.85	V	32.15	-74.42	0.00	0.33	-74.75	-13.00	61.75
179.64	H	35.15	-74.09	0.00	0.24	-74.33	-13.00	61.33
637.31	V	32.19	-66.38	0.00	0.39	-66.77	-13.00	53.77
1.4MHz QPSK RB1#0, Frequency: 1754.3MHz								
100.55	H	35.79	-78.88	0.00	0.20	-79.08	-13.00	66.08
387.93	V	32.72	-73.85	0.00	0.33	-74.18	-13.00	61.18
178.78	H	35.22	-74.09	0.00	0.24	-74.33	-13.00	61.33
636.81	V	31.77	-66.85	0.00	0.39	-67.24	-13.00	54.24

FDD-LTE Band 5:

Frequency (MHz)	Polar (H/V)	Receiver Reading (dBµV)	Substituted Method			Absolute Level (dBm)	Limit (dBm)	Margin (dB)
			Substituted Level (dBm)	Antenna Gain (dBd)	Cable Loss (dB)			
1.4MHz QPSK RB1#0, Frequency: 824.7MHz								
104.95	H	35.59	-78.82	0.00	0.20	-79.02	-13.00	66.02
386.54	V	32.61	-74.01	0.00	0.32	-74.33	-13.00	61.33
180.14	H	35.13	-74.07	0.00	0.24	-74.31	-13.00	61.31
637.65	V	32.53	-66.01	0.00	0.39	-66.40	-13.00	53.40
1.4MHz QPSK RB1#0, Frequency: 836.5MHz								
102.41	H	35.75	-78.81	0.00	0.20	-79.01	-13.00	66.01
385.71	V	33.06	-73.59	0.00	0.32	-73.91	-13.00	60.91
175.71	H	35.26	-74.31	0.00	0.24	-74.55	-13.00	61.55
634.93	V	32.01	-66.81	0.00	0.39	-67.20	-13.00	54.20
1.4MHz QPSK RB1#0, Frequency: 848.3MHz								
101.52	H	35.69	-78.92	0.00	0.20	-79.12	-13.00	66.12
388.84	V	32.27	-74.27	0.00	0.33	-74.60	-13.00	61.60
177.74	H	35.50	-73.90	0.00	0.24	-74.14	-13.00	61.14
637.19	V	32.65	-65.94	0.00	0.39	-66.33	-13.00	53.33

FDD-LTE Band 7:

Frequency (MHz)	Polar (H/V)	Receiver Reading (dBµV)	Substituted Method			Absolute Level (dBm)	Limit (dBm)	Margin (dB)
			Substituted Level (dBm)	Antenna Gain (dBd)	Cable Loss (dB)			
5MHz QPSK RB1#0, Frequency: 2502.5MHz								
100.96	H	36.19	-78.45	0.00	0.20	-78.65	-25.00	53.65
384.61	V	32.53	-74.16	0.00	0.32	-74.48	-25.00	49.48
178.83	H	35.53	-73.78	0.00	0.24	-74.02	-25.00	49.02
638.59	V	32.43	-66.01	0.00	0.39	-66.40	-25.00	41.40
5MHz QPSK RB1#0, Frequency: 2535MHz								
101.90	H	35.72	-78.87	0.00	0.20	-79.07	-25.00	54.07
385.50	V	32.86	-73.80	0.00	0.32	-74.12	-25.00	49.12
179.95	H	35.76	-73.45	0.00	0.24	-73.69	-25.00	48.69
637.63	V	31.76	-66.78	0.00	0.39	-67.17	-25.00	42.17
5MHz QPSK RB1#0, Frequency: 2567.5MHz								
104.69	H	36.00	-78.42	0.00	0.20	-78.62	-25.00	53.62
384.29	V	32.68	-74.02	0.00	0.32	-74.34	-25.00	49.34
177.38	H	35.46	-73.97	0.00	0.24	-74.21	-25.00	49.21
635.49	V	31.58	-67.18	0.00	0.39	-67.57	-25.00	42.57

FDD-LTE Band 12:

Frequency (MHz)	Polar (H/V)	Receiver Reading (dBµV)	Substituted Method			Absolute Level (dBm)	Limit (dBm)	Margin (dB)
			Substituted Level (dBm)	Antenna Gain (dBd)	Cable Loss (dB)			
1.4MHz QPSK RB1#0, Frequency: 699.7MHz								
101.04	H	35.63	-79.01	0.00	0.20	-79.21	-13.00	66.21
387.70	V	33.02	-73.56	0.00	0.33	-73.89	-13.00	60.89
178.19	H	35.67	-73.69	0.00	0.24	-73.93	-13.00	60.93
637.86	V	31.77	-66.75	0.00	0.39	-67.14	-13.00	54.14
1.4MHz QPSK RB1#0, Frequency: 707.5MHz								
104.57	H	36.53	-77.90	0.00	0.20	-78.10	-13.00	65.10
388.14	V	32.35	-74.21	0.00	0.33	-74.54	-13.00	61.54
177.24	H	35.06	-74.38	0.00	0.24	-74.62	-13.00	61.62
636.68	V	32.56	-66.08	0.00	0.39	-66.47	-13.00	53.47
1.4MHz QPSK RB1#0, Frequency: 715.3MHz								
102.60	H	36.05	-78.50	0.00	0.20	-78.70	-13.00	65.70
386.76	V	32.43	-74.18	0.00	0.32	-74.50	-13.00	61.50
176.81	H	35.77	-73.71	0.00	0.24	-73.95	-13.00	60.95
634.81	V	32.57	-66.26	0.00	0.39	-66.65	-13.00	53.65

FDD-LTE Band 13:

Frequency (MHz)	Polar (H/V)	Receiver Reading (dBμV)	Substituted Method			Absolute Level (dBm)	Limit (dBm)	Margin (dB)
			Substituted Level (dBm)	Antenna Gain (dBd)	Cable Loss (dB)			
5MHz QPSK RB1#0, Frequency: 779.5MHz								
769.54	H	35.45	-64.45	0.00	0.41	-64.86	-35.00	29.86
768.52	V	32.27	-67.42	0.00	0.41	-67.83	-35.00	32.83
799.28	H	35.12	-64.99	0.00	0.41	-65.40	-35.00	30.40
801.25	V	31.52	-68.00	0.00	0.41	-68.41	-35.00	33.41
5MHz QPSK RB1#0, Frequency: 784.5MHz								
773.96	H	36.48	-63.45	0.00	0.41	-63.86	-35.00	28.86
769.79	V	31.97	-67.71	0.00	0.41	-68.12	-35.00	33.12
800.02	H	35.29	-64.83	0.00	0.41	-65.24	-35.00	30.24
802.14	V	32.54	-66.89	0.00	0.41	-67.30	-35.00	32.30

FDD-LTE Band 17:

Frequency (MHz)	Polar (H/V)	Receiver Reading (dBμV)	Substituted Method			Absolute Level (dBm)	Limit (dBm)	Margin (dB)
			Substituted Level (dBm)	Antenna Gain (dBd)	Cable Loss (dB)			
5MHz QPSK RB1#0, Frequency: 706.5MHz								
101.19	H	35.51	-79.12	0.00	0.20	-79.32	-13.00	66.32
387.72	V	32.59	-73.99	0.00	0.33	-74.32	-13.00	61.32
176.87	H	35.60	-73.87	0.00	0.24	-74.11	-13.00	61.11
637.23	V	32.14	-66.44	0.00	0.39	-66.83	-13.00	53.83
5MHz QPSK RB1#0, Frequency: 710MHz								
102.23	H	36.23	-78.34	0.00	0.20	-78.54	-13.00	65.54
386.76	V	33.16	-73.45	0.00	0.32	-73.77	-13.00	60.77
176.48	H	35.37	-74.14	0.00	0.24	-74.38	-13.00	61.38
639.06	V	32.61	-65.78	0.00	0.39	-66.17	-13.00	53.17
5MHz QPSK RB1#0, Frequency: 713.5MHz								
104.90	H	35.42	-78.99	0.00	0.20	-79.19	-13.00	66.19
386.29	V	32.51	-74.12	0.00	0.32	-74.44	-13.00	61.44
179.73	H	35.50	-73.73	0.00	0.24	-73.97	-13.00	60.97
635.01	V	31.56	-67.25	0.00	0.39	-67.64	-13.00	54.64

FDD-LTE Band 66:

Frequency (MHz)	Polar (H/V)	Receiver Reading (dBµV)	Substituted Method			Absolute Level (dBm)	Limit (dBm)	Margin (dB)
			Substituted Level (dBm)	Antenna Gain (dBd)	Cable Loss (dB)			
1.4MHz QPSK RB1#0, Frequency: 1710.7MHz								
101.69	H	36.42	-78.18	0.00	0.20	-78.38	-13.00	65.38
388.54	V	31.96	-74.59	0.00	0.33	-74.92	-13.00	61.92
175.45	H	36.00	-73.59	0.00	0.24	-73.83	-13.00	60.83
634.84	V	32.08	-66.75	0.00	0.39	-67.14	-13.00	54.14
1.4MHz QPSK RB1#0, Frequency: 1745MHz								
102.38	H	36.35	-78.21	0.00	0.20	-78.41	-13.00	65.41
384.79	V	31.99	-74.69	0.00	0.32	-75.01	-13.00	62.01
177.43	H	34.82	-74.60	0.00	0.24	-74.84	-13.00	61.84
635.36	V	32.13	-66.64	0.00	0.39	-67.03	-13.00	54.03
1.4MHz QPSK RB1#0, Frequency: 1779.3MHz								
103.19	H	36.53	-77.98	0.00	0.20	-78.18	-13.00	65.18
388.93	V	32.21	-74.32	0.00	0.33	-74.65	-13.00	61.65
179.51	H	35.15	-74.10	0.00	0.24	-74.34	-13.00	61.34
634.94	V	32.82	-66.00	0.00	0.39	-66.39	-13.00	53.39

TDD-LTE Band 38:

Frequency (MHz)	Polar (H/V)	Receiver Reading (dBµV)	Substituted Method			Absolute Level (dBm)	Limit (dBm)	Margin (dB)
			Substituted Level (dBm)	Antenna Gain (dBd)	Cable Loss (dB)			
5MHz QPSK RB1#0, Frequency: 2572.5MHz								
102.04	H	35.54	-79.04	0.00	0.20	-79.24	-25.00	54.24
386.12	V	32.29	-74.34	0.00	0.32	-74.66	-25.00	49.66
179.48	H	35.92	-73.33	0.00	0.24	-73.57	-25.00	48.57
634.56	V	32.42	-66.44	0.00	0.39	-66.83	-25.00	41.83
5MHz QPSK RB1#0, Frequency: 2595MHz								
104.56	H	36.08	-78.35	0.00	0.20	-78.55	-25.00	53.55
384.75	V	32.55	-74.13	0.00	0.32	-74.45	-25.00	49.45
179.37	H	35.86	-73.40	0.00	0.24	-73.64	-25.00	48.64
634.54	V	31.91	-66.95	0.00	0.39	-67.34	-25.00	42.34
5MHz QPSK RB1#0, Frequency: 2617.5MHz								
102.50	H	36.65	-77.90	0.00	0.20	-78.10	-25.00	53.10
385.13	V	33.18	-73.49	0.00	0.32	-73.81	-25.00	48.81
179.37	H	35.94	-73.32	0.00	0.24	-73.56	-25.00	48.56
638.16	V	31.81	-66.68	0.00	0.39	-67.07	-25.00	42.07

TDD-LTE Band 41:

Frequency (MHz)	Polar (H/V)	Receiver Reading (dBμV)	Substituted Method			Absolute Level (dBm)	Limit (dBm)	Margin (dB)
			Substituted Level (dBm)	Antenna Gain (dBd)	Cable Loss (dB)			
5MHz QPSK RB1#0, Frequency: 2498.5MHz								
104.33	H	36.24	-78.20	0.00	0.20	-78.40	-25.00	53.40
386.58	V	32.48	-74.14	0.00	0.32	-74.46	-25.00	49.46
175.67	H	35.69	-73.88	0.00	0.24	-74.12	-25.00	49.12
634.10	V	31.37	-67.53	0.00	0.39	-67.92	-25.00	42.92
5MHz QPSK RB1#0, Frequency: 2593MHz								
103.32	H	35.35	-79.15	0.00	0.20	-79.35	-25.00	54.35
385.25	V	33.14	-73.52	0.00	0.32	-73.84	-25.00	48.84
175.37	H	35.52	-74.08	0.00	0.24	-74.32	-25.00	49.32
636.84	V	32.59	-66.03	0.00	0.39	-66.42	-25.00	41.42
5MHz QPSK RB1#0, Frequency: 2687.5MHz								
101.09	H	36.62	-78.02	0.00	0.20	-78.22	-25.00	53.22
388.59	V	32.22	-74.33	0.00	0.33	-74.66	-25.00	49.66
180.00	H	35.97	-73.24	0.00	0.24	-73.48	-25.00	48.48
634.76	V	31.35	-67.49	0.00	0.39	-67.88	-25.00	42.88

Note:
1. The unit of antenna gain is dBd for frequency below 1GHz.
2. Absolute Level = Substituted Level - Cable loss + Antenna Gain
Margin = Limit- Absolute Level

6.2.2 Above 1GHz

Note: The worst modulation and bandwidth is as below:

FDD-LTE Band 2(1-20GHz):

Frequency (MHz)	Polar (H/V)	Receiver Reading (dBμV)	Substituted Method			Absolute Level (dBm)	Limit (dBm)	Margin (dB)
			Substituted Level (dBm)	Antenna Gain (dBi)	Cable Loss (dB)			
1.4MHz QPSK RB1#0, Frequency: 1850.7MHz								
3701.400	H	64.50	-40.48	6.00	2.39	-36.87	-13.00	23.87
3701.400	V	68.34	-36.91	6.00	2.39	-33.30	-13.00	20.30
5552.100	H	68.56	-37.22	10.19	2.91	-29.94	-13.00	16.94
5552.100	V	70.06	-36.25	10.19	2.91	-28.97	-13.00	15.97
7402.800	H	56.22	-44.46	8.46	3.32	-39.32	-13.00	26.32
7402.800	V	54.15	-47.52	8.46	3.32	-42.38	-13.00	29.38
1.4MHz QPSK RB1#0, Frequency: 1880 MHz								
3760.000	H	70.28	-34.65	5.92	2.41	-31.14	-13.00	18.14
3760.000	V	75.72	-29.37	5.92	2.41	-25.86	-13.00	12.86
5640.000	H	69.24	-36.23	9.90	2.93	-29.26	-13.00	16.26
5640.000	V	70.41	-35.62	9.90	2.93	-28.65	-13.00	15.65
7520.000	H	58.70	-41.81	7.66	3.35	-37.50	-13.00	24.50
7520.000	V	55.48	-46.15	7.66	3.35	-41.84	-13.00	28.84
1.4MHz QPSK RB1#0, Frequency: 1909.3 MHz								
3818.600	H	74.28	-30.60	6.15	2.42	-26.87	-13.00	13.87
3818.600	V	74.46	-30.46	6.15	2.42	-26.73	-13.00	13.73
5727.900	H	65.94	-39.23	9.69	2.95	-32.49	-13.00	19.49
5727.900	V	66.81	-38.94	9.69	2.95	-32.20	-13.00	19.20
7637.200	H	60.43	-39.84	8.20	3.40	-35.04	-13.00	22.04
7637.200	V	57.83	-43.51	8.20	3.40	-38.71	-13.00	25.71

FDD-LTE Band 4(1-18GHz):

Frequency (MHz)	Polar (H/V)	Receiver Reading (dBμV)	Substituted Method			Absolute Level (dBm)	Limit (dBm)	Margin (dB)
			Substituted Level (dBm)	Antenna Gain (dBi)	Cable Loss (dB)			
1.4MHz QPSK RB1#0, Frequency: 1710.7MHz								
3421.400	H	67.00	-38.13	4.73	2.32	-35.72	-13.00	22.72
3421.400	V	70.67	-35.06	4.73	2.32	-32.65	-13.00	19.65
5132.100	H	67.52	-38.23	10.74	2.77	-30.26	-13.00	17.26
5132.100	V	71.98	-34.29	10.74	2.77	-26.32	-13.00	13.32
6842.800	H	52.86	-48.96	9.96	3.22	-42.22	-13.00	29.22
6842.800	V	53.31	-49.07	9.96	3.22	-42.33	-13.00	29.33
1.4MHz QPSK RB1#0, Frequency: 1732.5MHz								
3465.000	H	65.89	-39.26	5.08	2.34	-36.52	-13.00	23.52
3465.000	V	67.89	-37.90	5.08	2.34	-35.16	-13.00	22.16
5197.500	H	71.72	-34.07	10.61	2.80	-26.26	-13.00	13.26
5197.500	V	79.85	-26.45	10.61	2.80	-18.64	-13.00	5.64
6930.000	H	56.89	-44.59	9.54	3.24	-38.29	-13.00	25.29
6930.000	V	56.70	-45.27	9.54	3.24	-38.97	-13.00	25.97
1.4MHz QPSK RB1#0, Frequency: 1754.3MHz								
3508.600	H	67.37	-37.78	5.57	2.35	-34.56	-13.00	21.56
3508.600	V	71.23	-34.58	5.57	2.35	-31.36	-13.00	18.36
5262.900	H	62.42	-43.41	10.85	2.82	-35.38	-13.00	22.38
5262.900	V	67.24	-39.10	10.85	2.82	-31.07	-13.00	18.07
7017.200	H	55.07	-46.12	9.19	3.25	-40.18	-13.00	27.18
7017.200	V	55.00	-46.64	9.19	3.25	-40.70	-13.00	27.70

FDD-LTE Band 5(1-10GHz):

Frequency (MHz)	Polar (H/V)	Receiver Reading (dBμV)	Substituted Method			Absolute Level (dBm)	Limit (dBm)	Margin (dB)
			Substituted Level (dBm)	Antenna Gain (dBi)	Cable Loss (dB)			
1.4MHz QPSK RB1#0, Frequency: 824.7MHz								
1649.400	H	84.01	-29.91	8.00	1.64	-23.55	-13.00	10.55
1649.400	V	79.44	-34.86	8.00	1.64	-28.50	-13.00	15.50
2474.100	H	77.71	-28.89	2.71	1.98	-28.16	-13.00	15.16
2474.100	V	77.16	-29.80	2.71	1.98	-29.07	-13.00	16.07
3298.800	H	65.43	-39.67	4.89	2.28	-37.06	-13.00	24.06
3298.800	V	60.75	-44.83	4.89	2.28	-42.22	-13.00	29.22
1.4MHz QPSK RB1#0, Frequency: 836.5MHz								
1673.000	H	82.28	-31.35	7.91	1.65	-25.09	-13.00	12.09
1673.000	V	76.29	-37.71	7.91	1.65	-31.45	-13.00	18.45
2509.500	H	75.90	-30.51	2.21	1.99	-30.29	-13.00	17.29
2509.500	V	76.74	-30.03	2.21	1.99	-29.81	-13.00	16.81
3346.000	H	63.29	-41.82	4.72	2.29	-39.39	-13.00	26.39
3346.000	V	58.10	-47.54	4.72	2.29	-45.11	-13.00	32.11
1.4MHz QPSK RB1#0, Frequency: 848.3MHz								
1696.600	H	81.06	-32.28	7.81	1.66	-26.13	-13.00	13.13
1696.600	V	73.85	-39.85	7.81	1.66	-33.70	-13.00	20.70
2544.900	H	75.74	-30.57	1.85	2.01	-30.73	-13.00	17.73
2544.900	V	74.47	-32.19	1.85	2.01	-32.35	-13.00	19.35
3393.200	H	62.11	-43.02	4.61	2.31	-40.72	-13.00	27.72
3393.200	V	57.85	-47.85	4.61	2.31	-45.55	-13.00	32.55

FDD-LTE Band 7(1-26GHz):

Frequency (MHz)	Polar (H/V)	Receiver Reading (dBμV)	Substituted Method			Absolute Level (dBm)	Limit (dBm)	Margin (dB)
			Substituted Level (dBm)	Antenna Gain (dBi)	Cable Loss (dB)			
5MHz QPSK RB1#0, Frequency: 2502.5MHz								
5005.000	H	56.52	-49.16	10.60	2.73	-41.29	-25.00	16.29
5005.000	V	64.18	-42.01	10.60	2.73	-34.14	-25.00	9.14
7507.500	H	54.53	-46.00	7.56	3.34	-41.78	-25.00	16.78
7507.500	V	53.84	-47.82	7.56	3.34	-43.60	-25.00	18.60
5MHz QPSK RB1#0, Frequency: 2535MHz								
5070.000	H	56.15	-49.57	10.68	2.75	-41.64	-25.00	16.64
5070.000	V	66.73	-39.50	10.68	2.75	-31.57	-25.00	6.57
7605.000	H	55.02	-45.32	8.20	3.38	-40.50	-25.00	15.50
7605.000	V	51.88	-49.54	8.20	3.38	-44.72	-25.00	19.72
5MHz QPSK RB1#0, Frequency: 2567.5MHz								
5135.000	H	54.97	-50.79	10.73	2.78	-42.84	-25.00	17.84
5135.000	V	61.36	-44.91	10.73	2.78	-36.96	-25.00	11.96
7702.500	H	56.08	-44.06	7.44	3.43	-40.05	-25.00	15.05
7702.500	V	53.10	-48.08	7.44	3.43	-44.07	-25.00	19.07

FDD-LTE Band 12(1-10GHz):

Frequency (MHz)	Polar (H/V)	Receiver Reading (dBμV)	Substituted Method			Absolute Level (dBm)	Limit (dBm)	Margin (dB)
			Substituted Level (dBm)	Antenna Gain (dBi)	Cable Loss (dB)			
1.4MHz QPSK RB1#0, Frequency: 699.7MHz								
1399.400	H	71.09	-44.73	7.70	1.53	-38.56	-13.00	25.56
1399.400	V	80.77	-35.52	7.70	1.53	-29.35	-13.00	16.35
2099.100	H	66.58	-42.39	3.58	1.82	-40.63	-13.00	27.63
2099.100	V	72.55	-36.66	3.58	1.82	-34.90	-13.00	21.90
2798.800	H	64.79	-40.79	3.90	2.10	-38.99	-13.00	25.99
2798.800	V	57.78	-48.07	3.90	2.10	-46.27	-13.00	33.27
1.4MHz QPSK RB1#0, Frequency: 707.5MHz								
1415.000	H	71.41	-44.40	7.76	1.54	-38.18	-13.00	25.18
1415.000	V	80.56	-35.72	7.76	1.54	-29.50	-13.00	16.50
2122.500	H	64.16	-44.67	3.74	1.83	-42.76	-13.00	29.76
2122.500	V	71.60	-37.47	3.74	1.83	-35.56	-13.00	22.56
2828.500	H	63.94	-41.55	3.90	2.11	-39.76	-13.00	26.76
2828.500	V	59.65	-46.11	3.90	2.11	-44.32	-13.00	31.32
1.4MHz QPSK RB1#0, Frequency: 715.3MHz								
1430.600	H	69.43	-46.37	7.82	1.55	-40.10	-13.00	27.10
1430.600	V	79.51	-36.76	7.82	1.55	-30.49	-13.00	17.49
2145.900	H	66.91	-41.77	3.88	1.84	-39.73	-13.00	26.73
2145.900	V	71.42	-37.50	3.88	1.84	-35.46	-13.00	22.46
2850.000	H	67.69	-37.74	3.90	2.12	-35.96	-13.00	22.96
2850.000	V	60.35	-45.34	3.90	2.12	-43.56	-13.00	30.56

FDD-LTE Band 13(1-10GHz):

Frequency (MHz)	Polar (H/V)	Receiver Reading (dBµV)	Substituted Method			Absolute Level (dBm)	Limit (dBm)	Margin (dB)
			Substituted Level (dBm)	Antenna Gain (dBi)	Cable Loss (dB)			
5MHz QPSK RB1#0, Frequency: 779.5MHz								
1559.000	H	62.83	-52.20	8.18	1.60	-45.62	-40.00	5.62
1559.000	V	67.88	-47.58	8.18	1.60	-41.00	-40.00	1.00
2338.500	H	59.50	-47.96	3.65	1.92	-46.23	-13.00	33.23
2338.500	V	59.25	-48.52	3.65	1.92	-46.79	-13.00	33.79
5MHz QPSK RB1#0, Frequency: 784.5MHz								
1569.000	H	56.83	-58.08	8.16	1.61	-51.53	-40.00	11.53
1569.000	V	64.56	-50.77	8.16	1.61	-44.22	-40.00	4.22
2353.500	H	51.41	-55.96	3.56	1.93	-54.33	-13.00	41.33
2353.500	V	54.17	-53.51	3.56	1.93	-51.88	-13.00	38.88

FDD-LTE Band 17(1-10GHz):

Frequency (MHz)	Polar (H/V)	Receiver Reading (dBµV)	Substituted Method			Absolute Level (dBm)	Limit (dBm)	Margin (dB)
			Substituted Level (dBm)	Antenna Gain (dBi)	Cable Loss (dB)			
5MHz QPSK RB1#0, Frequency: 706.5MHz								
1413.000	H	66.96	-48.85	7.75	1.54	-42.64	-13.00	29.64
1413.000	V	77.56	-38.72	7.75	1.54	-32.51	-13.00	19.51
2119.500	H	63.96	-44.88	3.72	1.83	-42.99	-13.00	29.99
2119.500	V	71.80	-37.28	3.72	1.83	-35.39	-13.00	22.39
2826.000	H	63.75	-41.75	3.90	2.11	-39.96	-13.00	26.96
2826.000	V	60.44	-45.32	3.90	2.11	-43.53	-13.00	30.53
5MHz QPSK RB1#0, Frequency: 710MHz								
1420.000	H	67.47	-48.34	7.78	1.54	-42.10	-13.00	29.10
1420.000	V	74.71	-41.57	7.78	1.54	-35.33	-13.00	22.33
2130.000	H	64.58	-44.20	3.78	1.83	-42.25	-13.00	29.25
2130.000	V	70.48	-38.54	3.78	1.83	-36.59	-13.00	23.59
2840.000	H	62.97	-42.49	3.90	2.11	-40.70	-13.00	27.70
2840.000	V	58.45	-47.27	3.90	2.11	-45.48	-13.00	32.48
5MHz QPSK RB1#0, Frequency: 713.5MHz								
1427.000	H	78.40	-37.40	7.81	1.54	-31.13	-13.00	18.13
1427.000	V	81.79	-34.48	7.81	1.54	-28.21	-13.00	15.21
2140.500	H	67.81	-40.90	3.84	1.84	-38.90	-13.00	25.90
2140.500	V	72.84	-36.12	3.84	1.84	-34.12	-13.00	21.12
2854.000	H	63.76	-41.66	3.91	2.12	-39.87	-13.00	26.87
2854.000	V	60.90	-44.77	3.91	2.12	-42.98	-13.00	29.98

FDD-LTE Band 66(1-18GHz):

Frequency (MHz)	Polar (H/V)	Receiver Reading (dBμV)	Substituted Method			Absolute Level (dBm)	Limit (dBm)	Margin (dB)
			Substituted Level (dBm)	Antenna Gain (dBi)	Cable Loss (dB)			
1.4MHz QPSK RB1#0, Frequency: 1710.7MHz								
3421.400	H	66.10	-39.03	4.73	2.32	-36.62	-13.00	23.62
3421.400	V	69.11	-36.62	4.73	2.32	-34.21	-13.00	21.21
5132.100	H	66.85	-38.90	10.74	2.77	-30.93	-13.00	17.93
5132.100	V	71.32	-34.95	10.74	2.77	-26.98	-13.00	13.98
1.4MHz QPSK RB1#0, Frequency: 1745MHz								
3490.000	H	62.79	-42.37	5.38	2.35	-39.34	-13.00	26.34
3490.000	V	65.72	-40.10	5.38	2.35	-37.07	-13.00	24.07
5235.000	H	67.41	-38.40	10.74	2.81	-30.47	-13.00	17.47
5235.000	V	78.24	-28.09	10.74	2.81	-20.16	-13.00	7.16
1.4MHz QPSK RB1#0, Frequency: 1779.3MHz								
3558.600	H	70.04	-35.07	5.92	2.36	-31.51	-13.00	18.51
3558.600	V	72.60	-33.06	5.92	2.36	-29.50	-13.00	16.50
5337.900	H	62.72	-43.15	10.92	2.84	-35.07	-13.00	22.07
5337.900	V	63.61	-42.78	10.92	2.84	-34.70	-13.00	21.70

TDD-LTE Band 38(1-26.5GHz):

Frequency (MHz)	Polar (H/V)	Receiver Reading (dBμV)	Substituted Method			Absolute Level (dBm)	Limit (dBm)	Margin (dB)
			Substituted Level (dBm)	Antenna Gain (dBi)	Cable Loss (dB)			
5MHz QPSK RB1#0, Frequency: 2572.5MHz								
5145.000	H	48.71	-57.05	10.71	2.78	-49.12	-25.00	24.12
5145.000	V	52.27	-54.00	10.71	2.78	-46.07	-25.00	21.07
7717.500	H	45.94	-54.17	7.72	3.43	-49.88	-25.00	24.88
7717.500	V	45.18	-55.96	7.72	3.43	-51.67	-25.00	26.67
5MHz QPSK RB1#0, Frequency: 2595MHz								
5190.000	H	53.05	-52.74	10.62	2.79	-44.91	-25.00	19.91
5190.000	V	50.98	-55.32	10.62	2.79	-47.49	-25.00	22.49
7785.000	H	45.52	-54.45	8.30	3.46	-49.61	-25.00	24.61
7785.000	V	45.40	-55.57	8.30	3.46	-50.73	-25.00	25.73
5MHz QPSK RB1#0, Frequency: 2617.5MHz								
5235.000	H	54.72	-51.09	10.74	2.81	-43.16	-25.00	18.16
5235.000	V	57.11	-49.22	10.74	2.81	-41.29	-25.00	16.29
7852.500	H	45.75	-54.09	8.60	3.49	-48.98	-25.00	23.98
7852.500	V	45.42	-55.39	8.60	3.49	-50.28	-25.00	25.28

TDD-LTE Band 41(1-27GHz):

Frequency (MHz)	Polar (H/V)	Receiver Reading (dBμV)	Substituted Method			Absolute Level (dBm)	Limit (dBm)	Margin (dB)
			Substituted Level (dBm)	Antenna Gain (dBi)	Cable Loss (dB)			
5MHz QPSK RB1#0, Frequency: 2498.5MHz								
4997.000	H	55.00	-50.68	10.61	2.73	-42.80	-25.00	17.80
4997.000	V	58.66	-47.53	10.61	2.73	-39.65	-25.00	14.65
7495.500	H	49.10	-51.46	7.52	3.34	-47.28	-25.00	22.28
7495.500	V	47.38	-54.30	7.52	3.34	-50.12	-25.00	25.12
5MHz QPSK RB1#0, Frequency: 2593MHz								
5186.000	H	54.03	-51.75	10.63	2.79	-43.91	-25.00	18.91
5186.000	V	52.57	-53.73	10.63	2.79	-45.89	-25.00	20.89
7779.000	H	47.57	-52.42	8.30	3.46	-47.58	-25.00	22.58
7779.000	V	45.06	-55.93	8.30	3.46	-51.09	-25.00	26.09
5MHz QPSK RB1#0, Frequency: 2687.5MHz								
5375.000	H	52.51	-53.38	10.80	2.86	-45.44	-25.00	20.44
5375.000	V	46.25	-60.16	10.80	2.86	-52.22	-25.00	27.22
8062.500	H	47.04	-51.90	9.60	3.55	-45.85	-25.00	20.85
8062.500	V	47.38	-52.16	9.60	3.55	-46.11	-25.00	21.11

Note:
1. The unit of antenna gain is dBi for frequency above 1GHz.
2. Absolute Level = Substituted Level - Cable loss + Antenna Gain
Margin = Limit- Absolute Level

7. EUT PHOTOGRAPHS

Please refer to the attachment 2607Q38146E-RF-EXP EUT EXTERNAL PHOTOGRAPHS and 2607Q38146E-RF-INP EUT INTERNAL PHOTOGRAPHS.

8. TEST SETUP PHOTOGRAPHS

Please refer to the attachment 2607Q38146E-RF-TSP TEST SETUP PHOTOGRAPHS.

Declarations

1. Bay Area Compliance Laboratories Corp. (Xiamen) is not responsible for authenticity of any information provided by the applicant. Information from the applicant that may affect test results are marked with an asterisk "★".

2. Unless otherwise stated, the results shown in this test report refer only to the sample(s) tested.

3. Unless required by the rule provided by the applicant or product regulations, then decision rule in this report did not consider the uncertainty.

4. The extended uncertainty given in this report is obtained by combining the standard uncertainty times the coverage factor k with the 95% confidence interval.

5. This report cannot be reproduced except in full, without prior written approval of Bay Area Compliance Laboratories Corp. (Xiamen).

6. This report is valid only with a valid digital signature. The digital signature may be available only under the adobe software above version 7.0.

******* END OF REPORT *******