TEST REPORT

Report No.:	BCTC2412854861E
Applicant:	Nickelman, LLC
Product Name:	Spray Remote Trainer
Test Model:	G2167TRAINCOLL
Tested Date:	2024-12-12 to 2025-01-03
Issued Date:	2025-01-03

Shenzhen BCTC Testing Co., Ltd.

FCC ID:2BMGW-G2

Product Name:	Spray Remote Trainer
Trademark:	N/A
Model/Type reference:	G2167TRAINCOLL G2220TRAINCOLL, G2HHTRAINCOLL
Prepared For:	Nickelman, LLC
Address:	8 The Green, Dover, Delaware, United States 19901
Manufacturer:	Nickelman, LLC
Address:	8 The Green, Dover, Delaware, United States 19901
Prepared By:	Shenzhen BCTC Testing Co., Ltd.
Address:	1-2/F., Building B, Pengzhou Industrial Park, No.158, Fuyuan 1st Road, Zhancheng, Fuhai Subdistrict, Bao'an District, Shenzhen, Guangdong, China
Sample Received Date:	2024-12-12
Sample tested Date:	2024-12-12 to 2025-01-03
Issue Date:	2025-01-03
Report No.:	BCTC2412854861E
Test Standards:	FCC Part15.249 ANSI C63.10-2013
Test Results:	PASS

Tested by:

Tang Changyu/ Project Handler

Approved by:

Zero Zhou/Reviewer

The test report is effective only with both signature and specialized stamp. This result(s) shown in this report refer only to the sample(s) tested. Without written approval of Shenzhen BCTC Testing Co., Ltd, this report can't be reproduced except in full. The tested sample(s) and the sample information are provided by the client.

Table Of Content

Test Report Declaration Page
1. Version 4
2. Test Summary 5
3. Measurement Uncertainty 6
4. Product Information And Test Setup 7
4.1 Product Information 7
4.2 Test Setup Configuration 7
4.3 Support Equipment 7
4.4 Channel List 8
4.5 Test Mode 8
5. Test Facility And Test Instrument Used 9
5.1 Test Facility 9
5.2 Test Instrument Used 9
6. Conducted Emissions 11
6.1 Block Diagram Of Test Setup 11
6.2 Limit 11
6.3 Test Procedure 11
6.4 EUT Operating Conditions 12
6.5 Test Result 12
7. Radiated Emissions 13
7.1 Block Diagram Of Test Setup 13
7.2 Limit 14
7.3 Test Procedure 15
7.4 EUT Operating Conditions 16
7.5 Test Result 17
8. 100 KHz Bandwidth Of Frequency Band Edge 20
8.1 Block Diagram Of Test Setup 20
8.2 Applicable Standard 20
8.3 Test Procedure 20
8.4 EUT Operating Conditions 20
8.5 Test Result 21
9. 20 Db Bandwidth 23
9.1 Block Diagram Of Test Setup 23
9.2 Limit 23
9.3 Test Procedure 23
9.4 EUT Operation Conditions 23
10. Antenna Requirement 25
10.1 Limit 25
10.2 Test Result 25
11. EUT Photographs 26
12. EUT Test Setup Photographs 27

(Note: N/A means not applicable)

1. Version

Report No.	Issue Date	Description	Approved
BCTC2412854861E	2025-01-03	Original	Valid

2. Test Summary

The Product has been tested according to the following specifications:

No.	Test Parameter	Clause No.	Results
1	Conducted Emission	15.207	N/A
2	20dB Bandwidth	15.215	PASS
3	Fundamental &Radiated Spurious Emission Measurement	15.249	PASS
4	Band Edge Emission	15.205	PASS
5	Antenna Requirement	15.203	PASS

Note: N/A means not applicable.

3. Measurement Uncertainty

Where relevant, the following measurement uncertainty levels have been estimated for tests performed on the Product as specified in CISPR 16-4-2. This uncertainty represents an expanded uncertainty expressed at approximately the 95% confidence level using a coverage factor of k=2.

No.	Item	Uncertainty
1	3m chamber Radiated spurious emission(9kHz-30MHz)	U=3.7dB
2	3m chamber Radiated spurious emission(30MHz-1GHz)	U=4.3dB
3	3m chamber Radiated spurious emission(1GHz-18GHz)	U=4.5dB
4	3m chamber Radiated spurious emission(18GHz-40GHz)	U=3.34dB
5	Conducted Emission(150kHz-30MHz)	U=3.20dB
6	Conducted Adjacent channel power	U=1.38dB
7	Conducted output power uncertainty Above 1G	U=1.576dB
8	Conducted output power uncertainty below 1G	U=1.28dB
9	humidity uncertainty	U=5.3%
10	Temperature uncertainty	U=0.59℃

4. Product Information And Test Setup

4.1 Product Information

Model/Type reference:	G2167TRAINCOLL G2220TRAINCOLL, G2HHTRAINCOLL
Model differences:	All the model are the same circuit and RF module, except model names
Hardware Version:	N/A
Software Version:	N/A
Operation Frequency:	915 MHz
Type of Modulation:	FSK
Number Of Channel	1CH
Antenna installation:	Internal antenna
Antenna Gain:	0 dBi Remark: ☒ The antenna gain of the product comes from the antenna report provided by the customer, and the test data is affected by the customer information. ☐ The antenna gain of the product is provided by the customer, and the test data is affected by the customer information.
Ratings:	DC 12V From Battery

4.2 Test Setup Configuration

See test photographs attached in *EUT TEST SETUP PHOTOGRAPHS* for the actual connections between Product and support equipment.

4.3 Support Equipment

No.	Device Type	Brand	Model	Series No.	Note
E-1	Spray Remote Trainer	N/A	G2167TRAINCOLL	N/A	EUT

Notes:

1. All the equipment/cables were placed in the worst-case configuration to maximize the emission during the test.
2. Grounding was established in accordance with the manufacturer's requirements and conditions for the intended use.

4.4 Channel List

CH	Frequency (MHz)
1	915

4.5 Test Mode

To investigate the maximum EMI emission characteristics generates from EUT, the test system was pre-scanning tested base on the consideration of following EUT operation mode or test configuration mode which possible have effect on EMI emission level. Each of these EUT operation mode(s) or test configuration mode(s) mentioned above was evaluated respectively.

Test Mode	Test mode
1	Transmitting

Note:
(1) Fully-charged battery is used during the test

5. Test Facility And Test Instrument Used

5.1 Test Facility

All measurement facilities used to collect the measurement data are located at Shenzhen BCTC Testing Co., Ltd. Address: 1-2/F., Building B, Pengzhou Industrial Park, No.158, Fuyuan 1st Road, Zhancheng, Fuhai Subdistrict, Bao'an District, Shenzhen, Guangdong, China. The site and apparatus are constructed in conformance with the requirements of ANSI C63.4 and CISPR 16-1-1 other equivalent standards.
FCC Test Firm Registration Number: 712850
A2LA certificate registration number is: CN1212
ISED Registered No.: 23583
ISED CAB identifier: CN0017

5.2 Test Instrument Used

RF Conducted Test					
Equipment	**Manufacturer**	**Model#**	**Serial#**	**Last Cal.**	**Next Cal.**
Power meter	Keysight	E4419	\	May 16, 2024	May 15, 2025
Power Sensor (AV)	Keysight	E9300A	\	May 16, 2024	May 15, 2025
Signal Analyzer20kHz-26.5GHz	Keysight	N9020A	MY49100060	May 16, 2024	May 15, 2025
Spectrum Analyzer9kHz-40GHz	R&S	FSP40	100363	May 16, 2024	May 15, 2025

Radiated Emissions Test (966 Chamber01)					
Equipment	**Manufacturer**	**Model#**	**Serial#**	**Last Cal.**	**Next Cal.**
966 chamber	ChengYu	966 Room	966	May 15, 2023	May 14, 2026
Receiver	R&S	ESR3	102075	May 16, 2024	May 15, 2025
Receiver	R&S	ESRP	101154	May 16, 2024	May 15, 2025
Amplifier	Schwarzbeck	BBV9744	9744-0037	May 16, 2024	May 15, 2025
TRILOG Broadband Antenna	Schwarzbeck	VULB9163	942	May 21, 2024	May 20, 2025
Loop Antenna(9KHz -30MHz)	Schwarzbeck	FMZB1519B	00014	May 21, 2024	May 20, 2025
Amplifier	SKET	LAPA_01G18 G-45dB	SK202104090 1	May 16, 2024	May 15, 2025
Horn Antenna	Schwarzbeck	BBHA9120D	1541	May 21, 2024	May 20, 2025
Amplifier(18G Hz-40GHz)	MITEQ	TTA1840-35-HG	2034381	May 16, 2024	May 15, 2025
Horn Antenna(18G Hz-40GHz)	Schwarzbeck	BBHA9170	00822	May 21, 2024	May 20, 2025
Spectrum Analyzer9kHz-40GHz	R&S	FSP40	100363	May 16, 2024	May 15, 2025
Software	Frad	EZ-EMC	FA-03A2 RE	\	\

6. Conducted Emissions

6.1 Block Diagram Of Test Setup

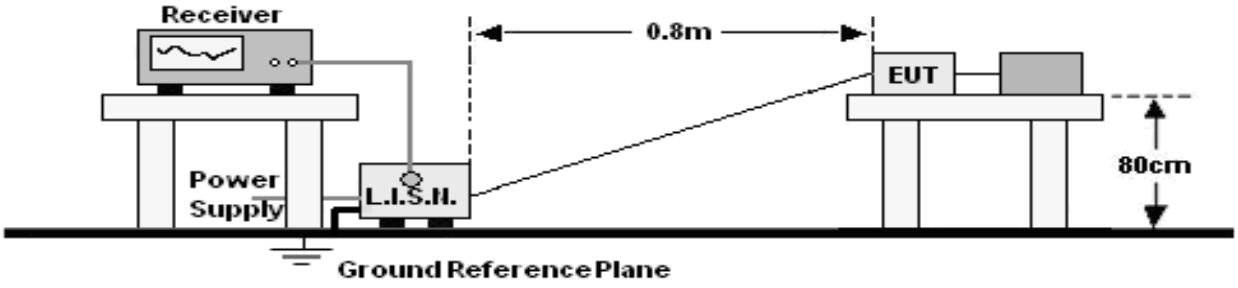

6.2 Limit

FREQUENCY (MHz)	Limit (dBuV)	
	Quas-peak	Average
0.15 -0.5	66 - 56 *	56 - 46 *
0.50 -5.0	56.00	46.00
5.0 -30.0	60.00	50.00
Notes: 1. *Decreasing linearly with logarithm of frequency. 2. The lower limit shall apply at the transition frequencies.		

6.3 Test Procedure

Receiver Parameters	Setting
Attenuation	10 dB
Start Frequency	0.15 MHz
Stop Frequency	30 MHz
IF Bandwidth	9 kHz

a. The Product was placed on a nonconductive table 0.8 m above the horizontal ground reference plane, and 0.4 m from the vertical ground reference plane, and connected to the main through Line Impedance Stability Network (L.I.S.N).
b. The RBW of the receiver was set at 9 kHz in 150 kHz ~ 30MHz with Peak and AVG detector in Max Hold mode. Run the receiver's pre-scan to record the maximum disturbance generated from Product in all power lines in the full band.
c. For each frequency whose maximum record was higher or close to limit, measure its QP and AVG values and record.

6.4 EUT Operating Conditions

The EUT was configured for testing in a typical fashion (as a customer would normally use it). The EUT has been programmed to continuously transmit during test. This operating condition was tested and used to collect the included data.

6.5 Test Result

The EUT is powered by the DC only, the test item is not applicable.

7. Radiated Emissions

7.1 Block Diagram Of Test Setup

（A）Radiated Emission Test-Up Frequency Below 30MHz

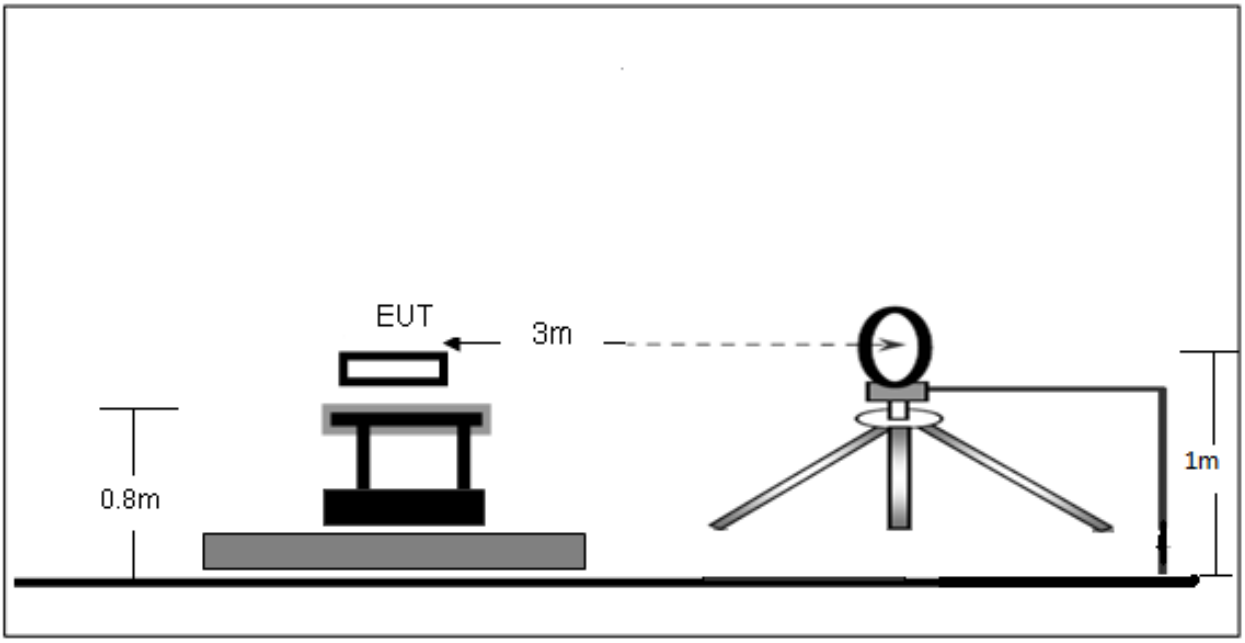

（B）Radiated Emission Test-Up Frequency 30MHz~1GHz

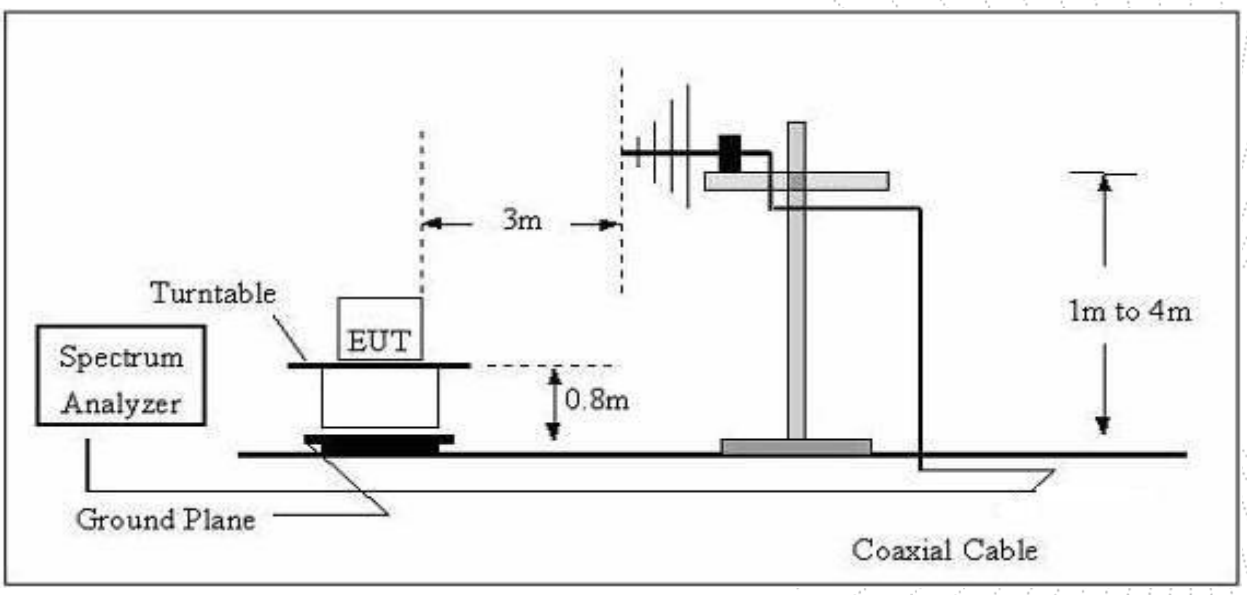

（C）Radiated Emission Test-Up Frequency Above 1GHz

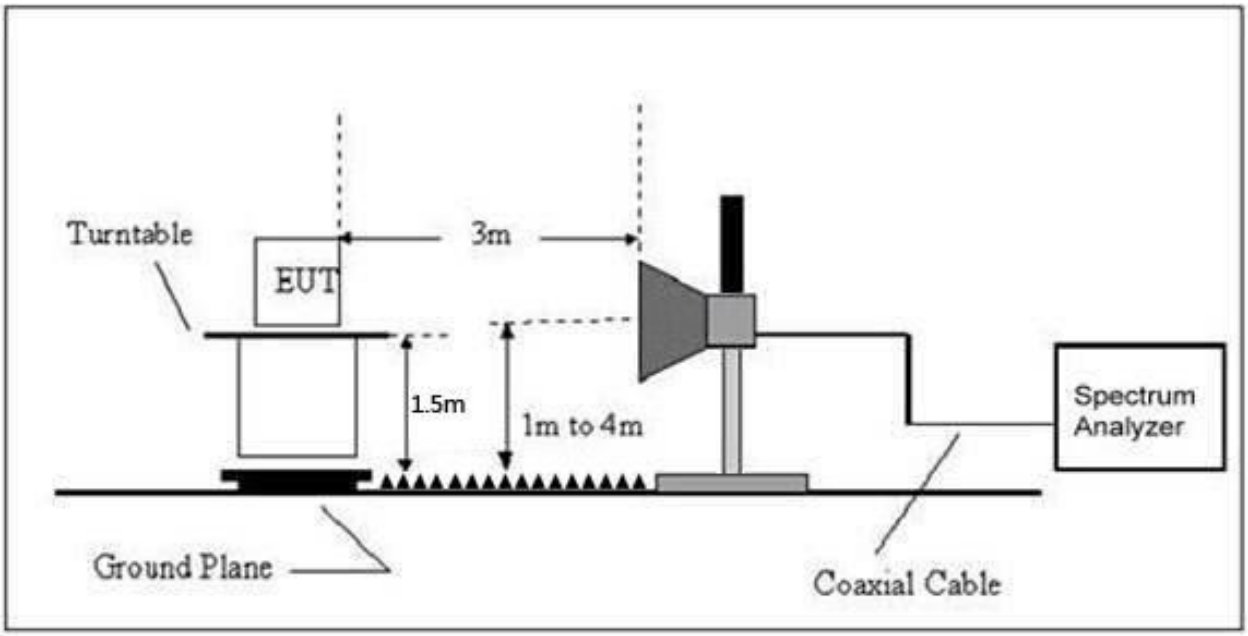

7.2 Limit

In case the emission fall within the restricted band specified on 15.205(a), then the 15.209(a) limit in the table below has to be followed.

Frequency	Field Strength	Distance	Field Strength Limit at 3m Distance	
(MHz)	uV/m	(m)	uV/m	dBuV/m
0.009 ~ 0.490	2400/F(kHz)	300	10000 * 2400/F(kHz)	$20\log^{(2400/F(kHz))} + 80$
0.490 ~ 1.705	24000/F(kHz)	30	100 * 24000/F(kHz)	$20\log^{(24000/F(kHz))} + 40$
1.705 ~ 30	30	30	100 * 30	$20\log^{(30)} + 40$
30 ~ 88	100	3	100	$20\log^{(100)}$
88 ~ 216	150	3	150	$20\log^{(150)}$
216 ~ 960	200	3	200	$20\log^{(200)}$
Above 960	500	3	500	$20\log^{(500)}$

The field strength of emissions from intentional radiators operated within these frequency bands shall comply with the following:

Fundamental frequency	Field strength of fundamental (millivolts/meter)	Field strength of harmonics (microvolts/meter)
902-928 MHz	50	500
2400-2483.5 MHz	50	500
5725-5875 MHz	50	500
24.0-24.25 GHz	250	2500

LIMITS OF RADIATED EMISSION MEASUREMENT (Above 1000MHz)

FREQUENCY (MHz)	Limit (dBuV/m) (at 3M)	
	PEAK	AVERAGE
Above 1000	74	54

Notes:
(1) The limit for radiated test was performed according to FCC PART 15C.
(2) The tighter limit applies at the band edges.
(3) Emission level (dBuV/m)=20log Emission level (uV/m).

FREQUENCY RANGE OF RADIATED MEASUREMENT (For unintentional radiators)

Highest frequency generated or Upper frequency of measurement used in the device or on which the device operates or tunes (MHz)	Range (MHz)
Below 1.705	30
1.705 – 108	1000
108 – 500	2000
500 – 1000	5000
Above 1000	5th harmonic of the highest frequency or 40 GHz, whichever is lower

7.3 Test Procedure

Spectrum Parameter	Setting
Attenuation	Auto
Start Frequency	1000 MHz
Stop Frequency	10th carrier harmonic
RB / VB (emission in restricted band)	1 MHz / 1 MHz for Peak, 1 MHz / *10Hz* for Average

Receiver Parameter	Setting
Attenuation	Auto
Start ~ Stop Frequency	9kHz~150kHz / RB 200Hz for QP
Start ~ Stop Frequency	150kHz~30MHz / RB 9kHz for QP
Start ~ Stop Frequency	30MHz~1000MHz / RB 120kHz for QP

Below 1GHz test procedure as below:
a. The EUT was placed on the top of a rotating table 0.8 meters above the ground at a 3 meter semi-anechoic chamber. The table was rotated 360 degrees to determine the position of the highest radiation.
b. The EUT was set 3 meters away from the interference-receiving antenna, which was mounted on the top of a variable-height antenna tower.
c. The antenna height is varied from one meter to four meters above the ground to determine the maximum value of the field strength. Both horizontal and vertical polarizations of the antenna are set to make the measurement.
d. For each suspected emission, the EUT was arranged to its worst case and then the antenna was tuned to heights from 1 meter to 4 meters (for the test frequency of below 30MHz, the antenna was tuned to heights 1 meter) and the rotatable table was turned from 0 degrees to 360 degrees to find the maximum reading.
e. The test-receiver system was set to Peak Detect Function and Specified Bandwidth with Maximum Hold Mode.
f. If the emission level of the EUT in peak mode was 10dB lower than the limit specified, then testing could be stopped and the peak values of the EUT would be reported. Otherwise the emissions that did not have 10dB margin would be re-tested one by one using peak, quasi-peak or average method as specified and then reported in a data sheet.
g. Different between above is the test site, change from Semi- Anechoic Chamber to fully Anechoic Chamber and change form table 0.8 metre to 1.5 metre(Above 18GHz the distance is 1 meter and table is 1.5 metre).
h. Test the EUT in the lowest channel,the middle channel ,the Highest channel.
Note:
Both horizontal and vertical antenna polarities were tested and performed pretest to three orthogonal axis. The worst case emissions were reported.

Above 1GHz test procedure as below:
a. The EUT was placed on the top of a rotating table 1.5 meters above the ground at a 3 meter chamber. The table was rotated 360 degrees to determine the position of the highest radiation.
b. The EUT was set 3 meters away from the interference-receiving antenna, which was mounted on the top of a variable-height antenna tower.
c. The antenna height is varied from one meter to four meters above the ground to determine the maximum value of the field strength. Both horizontal and vertical polarizations of the antenna are set to make the measurement.
d. For each suspected emission, the EUT was arranged to its worst case and then the antenna was tuned to heights from 1 meter to 4 meters and the rota table was turned from 0 degrees to 360 degrees to find the maximum reading.
e. The test-receiver system was set to Peak Detect Function and Specified Bandwidth with Maximum Hold Mode.
f. If the emission level of the EUT in peak mode was 10dB lower than the limit specified, then testing could be stopped and the peak values of the EUT would be reported. Otherwise the emissions that did not have 10dB margin would be re-tested one by one using peak, quasi-peak or average method as specified and then reported in a data sheet.
g. Test the EUT in the lowest channel, the Highest channel.
Note:
Both horizontal and vertical antenna polarities were tested and performed pretest to three orthogonal axis. The worst case emissions were reported.

7.4 EUT Operating Conditions

The EUT was configured for testing in a typical fashion (as a customer would normally use it). The EUT has been programmed to continuously transmit during test. This operating condition was tested and used to collect the included data.

7.5 Test Result

Between 30MHz – 1GHz

Temperature:	24.5 ℃	Relative Humidity:	52%
Pressure:	101KPa	Phase :	Horizontal
Test Mode:	Mode 1	Test Voltage :	DC 12V

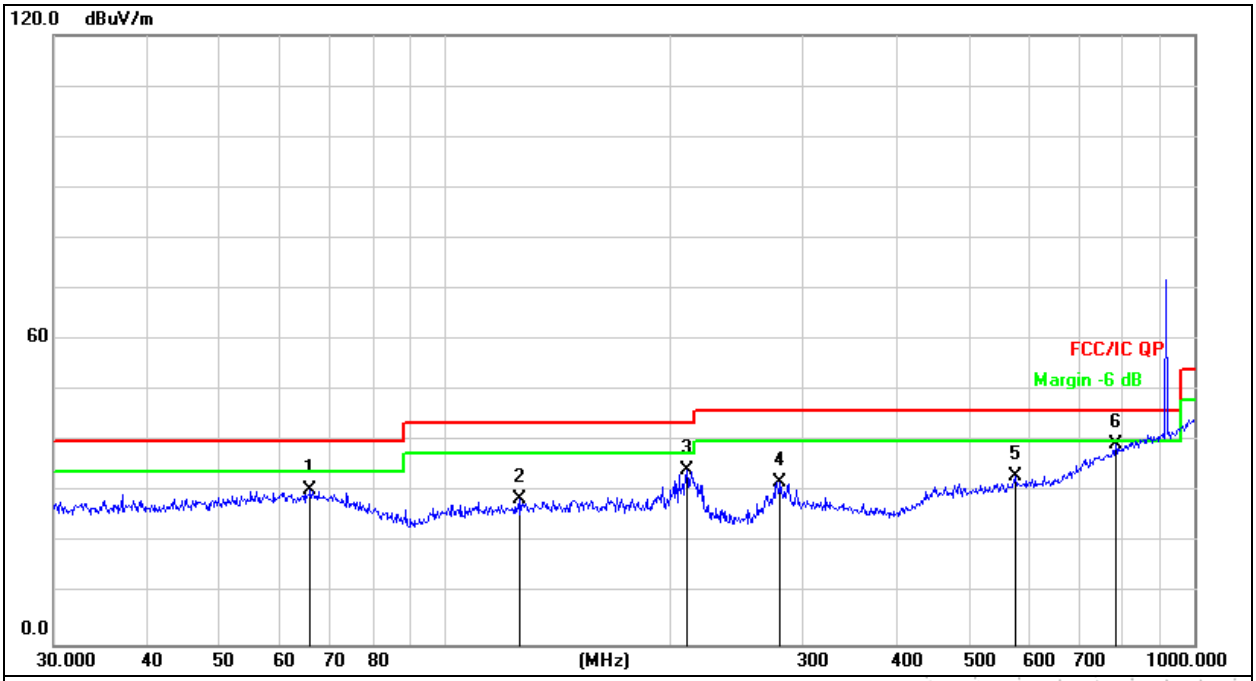

Remark:
1. Factor = Antenna Factor + Cable Loss – Pre-amplifier.
2. Measurement=Reading Level+ Correct Factor
3. Over=Measurement-Limit

No.	Mk.	Freq.	Reading Level	Correct Factor	Measure-ment	Limit	Over	
		MHz	dBuV	dB	dBuV/m	dB/m	dB	Detector
1		66.0342	44.73	-14.23	30.50	40.00	-9.50	QP
2		125.8864	45.15	-16.61	28.54	43.50	-14.96	QP
3		210.0482	51.74	-17.41	34.33	43.50	-9.17	QP
4		280.0237	49.58	-17.50	32.08	46.00	-13.92	QP
5		576.6443	45.73	-12.55	33.18	46.00	-12.82	QP
6	*	785.0935	45.89	-6.42	39.47	46.00	-6.53	QP

Temperature:	24.5 ℃	Relative Humidity:	52%
Pressure:	101KPa	Phase :	Vertical
Test Mode:	Mode 1	Test Voltage :	DC 12V

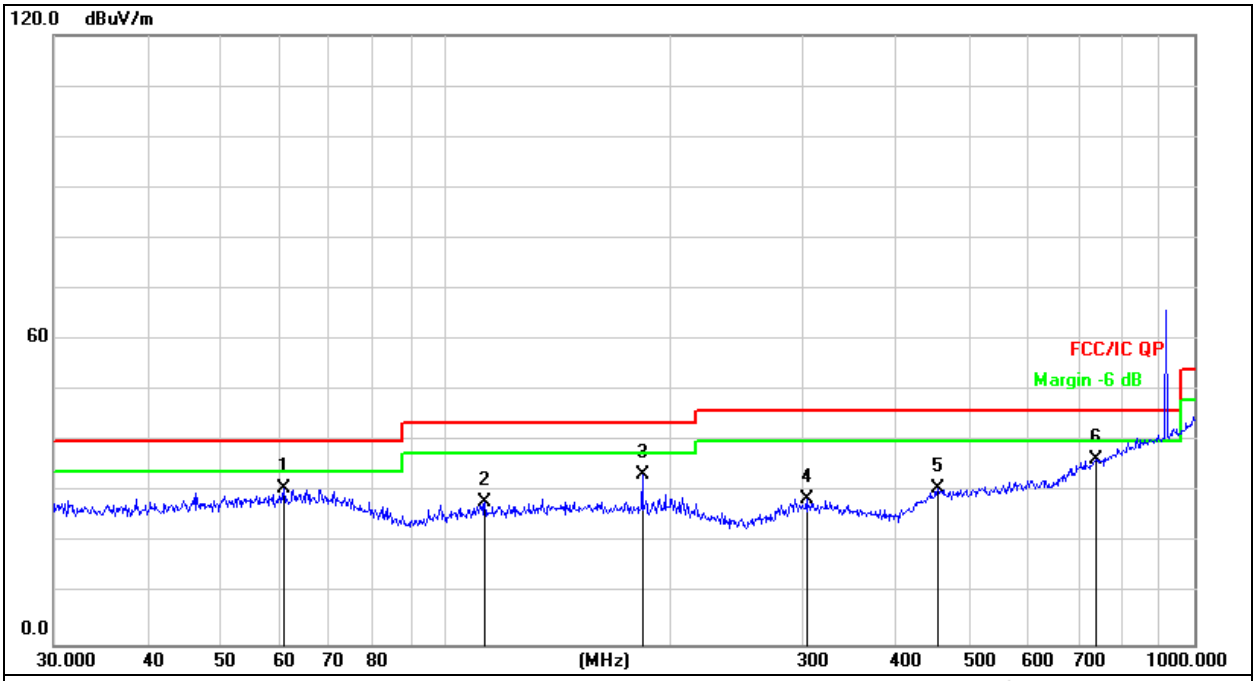

Remark:
1. Factor = Antenna Factor + Cable Loss – Pre-amplifier.
2. Measurement=Reading Level+ Correct Factor
3. Over=Measurement-Limit

No.	Mk.	Freq.	Reading Level	Correct Factor	Measure-ment	Limit	Over	
		MHz	dBuV	dB	dBuV/m	dB/m	dB	Detector
1	*	60.9176	44.97	-14.20	30.77	40.00	-9.23	QP
2		112.9196	44.90	-16.96	27.94	43.50	-15.56	QP
3		183.2005	50.09	-16.58	33.51	43.50	-9.99	QP
4		303.5437	44.85	-16.28	28.57	46.00	-17.43	QP
5		454.3100	44.63	-13.91	30.72	46.00	-15.28	QP
6		739.6604	44.44	-7.92	36.52	46.00	-9.48	QP

(Above 1000 MHz)

Polar (H/V)	Frequency (MHz)	Meter Reading (dBuV)	Factor (dB)	Emission Level (dBuV/m)	Limits (dBuV/m)	Margin (dB)	Detector Type
915 MHz							
V	1830.00	79.82	-26.97	52.85	74.00	-21.15	PK
V	1830.00	68.88	-26.97	41.91	54.00	-12.09	AV
V	2745.00	75.10	-24.37	50.73	74.00	-23.27	PK
V	2745.00	65.70	-24.37	41.33	54.00	-12.67	AV
V	3660.00	75.72	-22.28	53.44	74.00	-20.56	PK
V	3660.00	66.83	-22.28	44.55	54.00	-9.45	AV
H	1830.00	82.83	-26.97	55.86	74.00	-18.14	PK
H	1830.00	73.10	-26.97	46.13	54.00	-7.87	AV
H	2745.00	75.65	-24.37	51.28	74.00	-22.72	PK
H	2745.00	67.76	-24.37	43.39	54.00	-10.61	AV
H	3660.00	70.45	-22.28	48.17	74.00	-25.83	PK
H	3660.00	62.35	-22.28	40.07	54.00	-13.93	AV

Remark:
Absolute Level= Reading Level+ Factor, Margin= Limit- Absolute Level
Other harmonics emissions are lower than 20dB below the allowable limit.

8. 100 KHz Bandwidth Of Frequency Band Edge

8.1 Block Diagram Of Test Setup

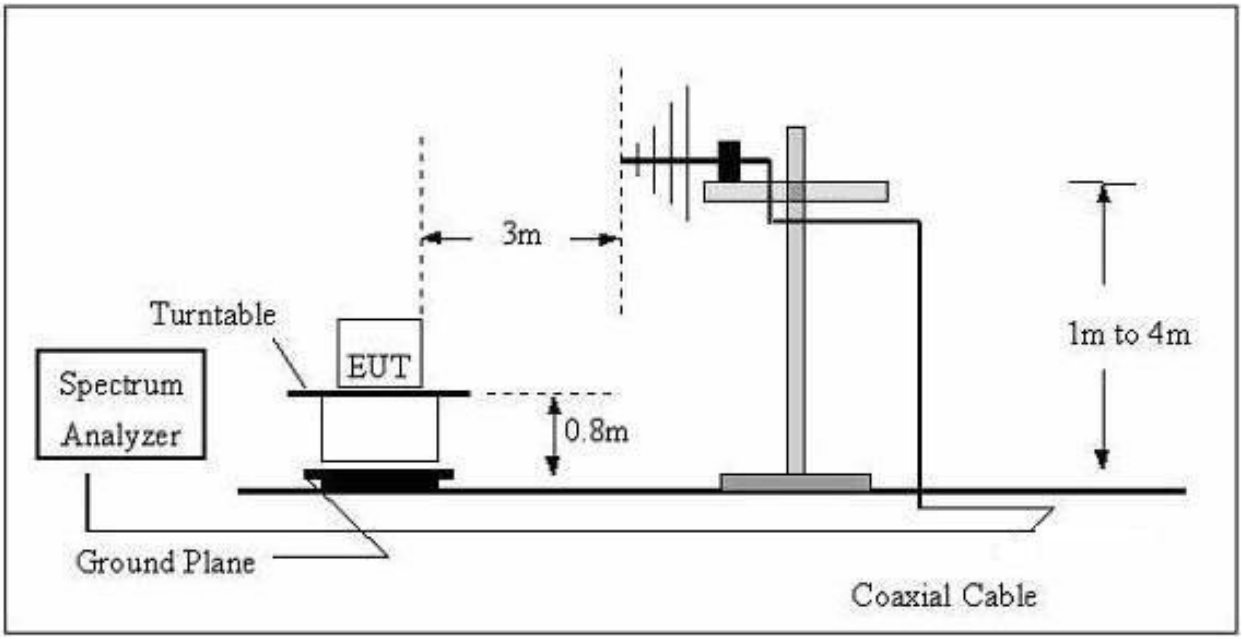

8.2 Applicable Standard

Emissions radiated outside of the specified frequency bands, except for harmonics, shall be attenuated by at least 50 dB below the level of the fundamental or to the general radiated emission limits in § 15.209, whichever is the lesser attenuation.

8.3 Test Procedure

a. Check the calibration of the measuring instrument using either an internal calibrator or a known signal from an external generator.
b. Position the EUT without connection to measurement instrument. Turn on the EUT and connect its antenna terminal to measurement instrument via a low loss cable. Then set it to any one measured frequency within its operating range, and make sure the instrument is operated in its linear range.
c.VBW for Peak, Quasi-peak, or Average Detector Function: 3 × RBW
d. Repeat above procedures until all measured frequencies were complete.
Note:
Both horizontal and vertical antenna polarities were tested and performed pretest to three orthogonal axis. The worst case emissions were reported.

8.4 EUT Operating Conditions

The EUT tested system was configured as the statements of 2.4 Unless otherwise a special operating condition is specified in the follows during the testing.

8.5 Test Result

Temperature:	24.5 ℃	Relative Humidity:	52%
Pressure:	101 kPa	Test Voltage:	DC 12V
Test Mode:	Transmitting		

915 MHz Horizontal

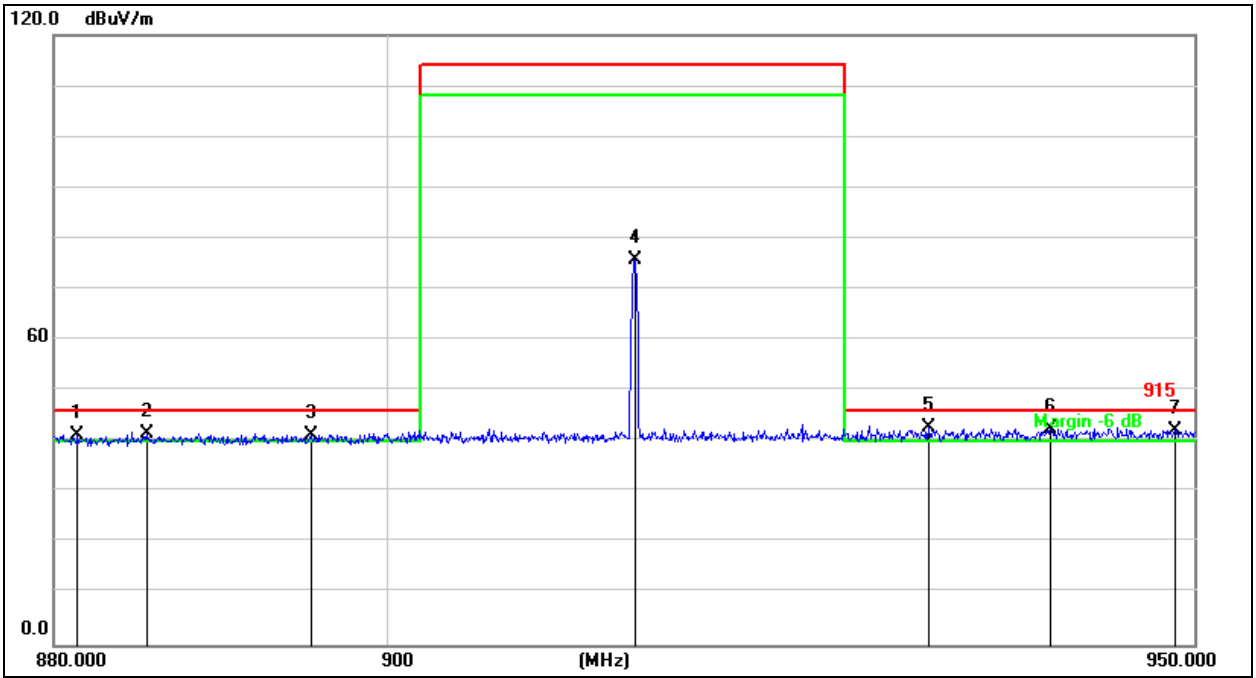

No.	Mk.	Freq.	Reading Level	Correct Factor	Measure-ment	Limit	Over	
		MHz	dBuV	dB	dBuV/m	dB/m	dB	Detector
1	!	881.4700	45.11	-3.92	41.19	46.00	-4.81	QP
2	!	885.6000	45.44	-3.85	41.59	46.00	-4.41	QP
3	!	895.4000	45.07	-3.69	41.38	46.00	-4.62	QP
4		915.0700	79.10	-3.37	75.73	114.0	-38.27	peak
5	*	933.2700	45.79	-3.06	42.73	46.00	-3.27	QP
6	!	940.9000	45.49	-2.93	42.56	46.00	-3.44	QP
7	!	948.8100	45.02	-2.80	42.22	46.00	-3.78	QP

Temperature:	24.5 ℃	Relative Humidity:	52%
Pressure:	101 kPa	Test Voltage:	DC 12V
Test Mode:	Transmitting		

915MHz Vertical

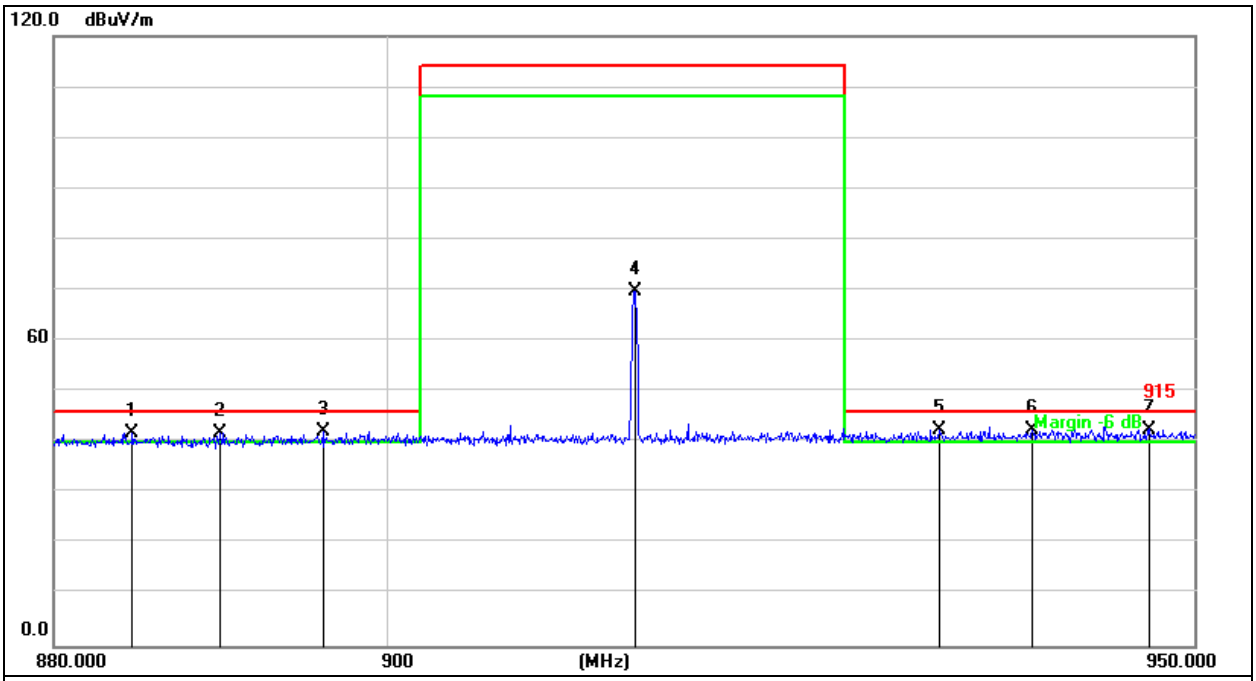

No.	Mk.	Freq.	Reading Level	Correct Factor	Measure-ment	Limit	Over	
		MHz	dBuV	dB	dBuV/m	dB/m	dB	Detector
1	!	884.6900	45.79	-3.86	41.93	46.00	-4.07	QP
2	!	889.9400	45.66	-3.78	41.88	46.00	-4.12	QP
3	!	896.1000	45.86	-3.68	42.18	46.00	-3.82	QP
4		915.0700	73.20	-3.37	69.83	114.0	-44.17	peak
5	!	933.9000	45.47	-3.05	42.42	46.00	-3.58	QP
6	*	939.7800	45.55	-2.95	42.60	46.00	-3.40	QP
7	!	947.1300	45.43	-2.83	42.60	46.00	-3.40	QP

9. 20 Db Bandwidth

9.1 Block Diagram Of Test Setup

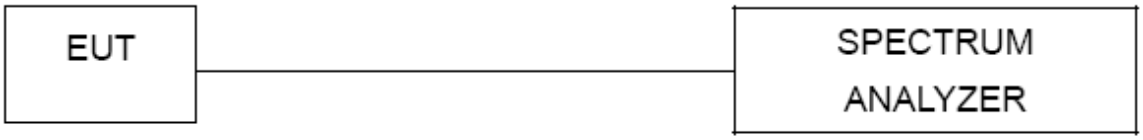

9.2 Limit

FCC Part15 (15.249) , Subpart C			
Section	**Test Item**	**Frequency Range (MHz)**	**Result**
15.249	Bandwidth	902~928	PASS

9.3 Test Procedure

1. Set resolution bandwidth (RBW) = 1-5% or DTS BW, not to exceed 100 kHz.
2. Set the video bandwidth (VBW) ≥ 3 x RBW.
3. Detector = Peak.
4. Trace mode = max hold.
5. Sweep = auto couple.
6. Allow the trace to stabilize.
7. Measure the maximum width of the emission that is constrained by the frequencies associated with the two outermost amplitude points (upper and lower) that are attenuated by 20 dB relative to the maximum level measured in the fundamental emission.

9.4 EUT Operation Conditions

The EUT tested system was configured as the statements of 2.4 Unless otherwise a special operating condition is specified in the follows during the testing.

9.5 Test Result

Temperature:	26℃	Relative Humidity:	54%
Test Voltage:	DC 12V	Remark:	N/A

Channel	Frequency (MHz)	20dB bandwidth (kHz)
01	915	136.6

CH01

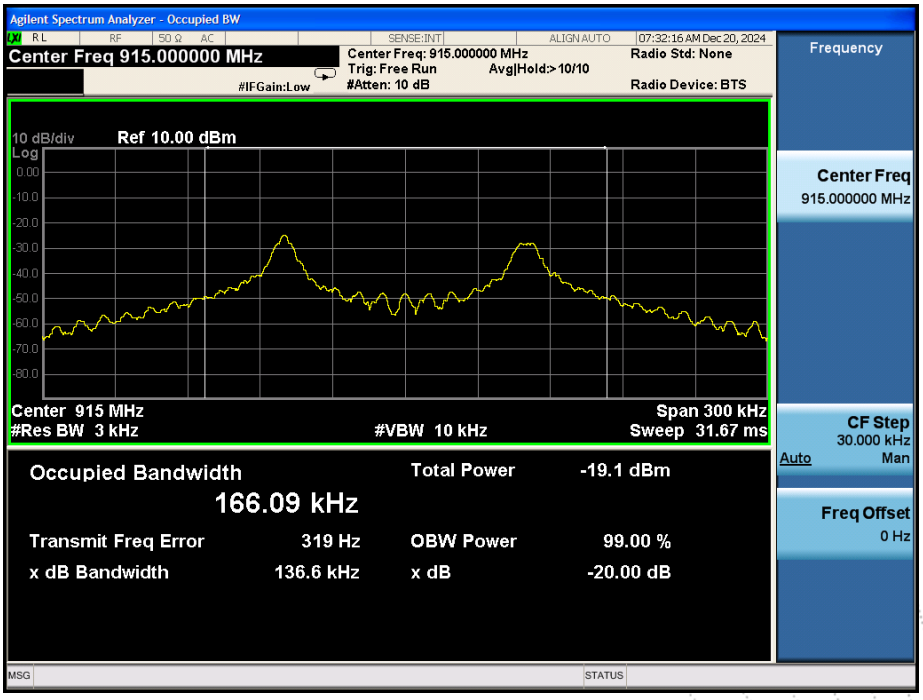

10. Antenna Requirement

10.1 Limit

15.203 requirement: For intentional device, according to 15.203: an intentional radiator shall be designed to ensure that no antenna other than that furnished by the responsible party shall be used with the device.

10.2 Test Result

The EUT antenna is Internal antenna, The antenna gain is 0 dBi, fulfill the requirement of this section.

11. EUT Photographs

EUT Photo 1

EUT Photo 2

NOTE: Appendix-Photographs Of EUT Constructional Details

12. EUT Test Setup Photographs

Radiated Measurement Photos

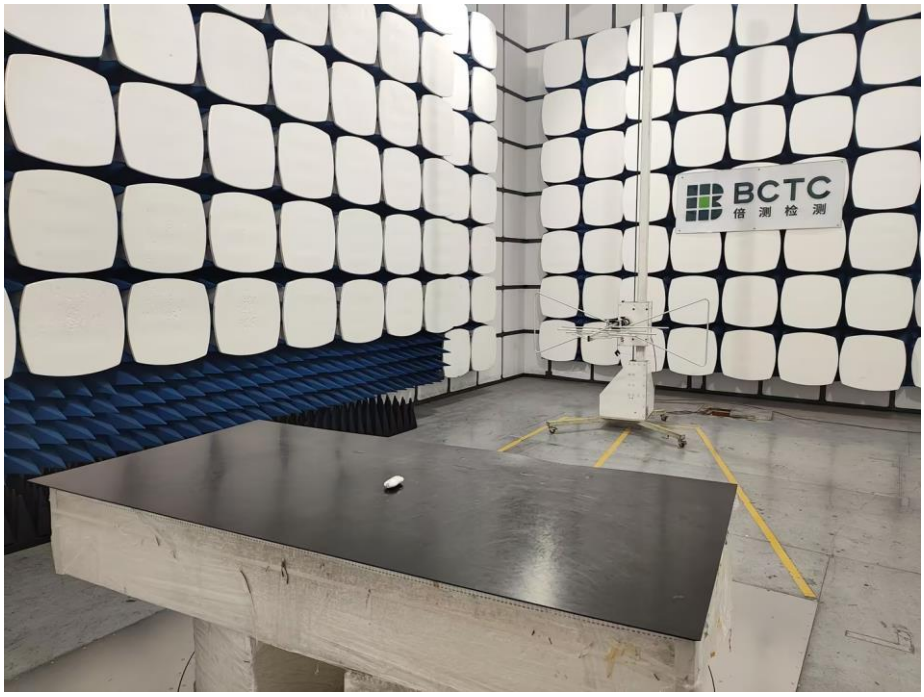

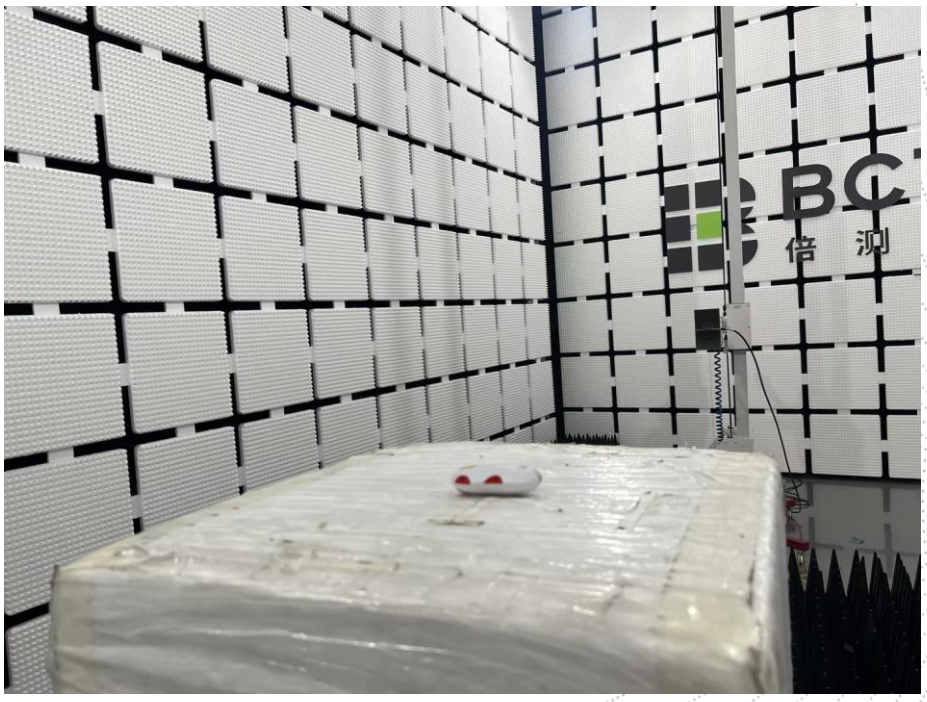

STATEMENT

1. The equipment lists are traceable to the national reference standards.

2. The test report can not be partially copied unless prior written approval is issued from our lab.

3. The test report is invalid without the "special seal for inspection and testing".

4. The test report is invalid without the signature of the approver.

5. The test process and test result is only related to the Unit Under Test.

6. Sample information is provided by the client and the laboratory is not responsible for its authenticity.

7. The quality system of our laboratory is in accordance with ISO/IEC17025.

8. If there is any objection to this test report, the client should inform issuing laboratory within 15 days from the date of receiving test report.

Address:
1-2/F., Building B, Pengzhou Industrial Park, No.158, Fuyuan 1st Road, Zhancheng, Fuhai Subdistrict, Bao'an District, Shenzhen, Guangdong, China

TEL: 400-788-9558

P.C.: 518103

FAX: 0755-33229357

Website: http://www.chnbctc.com

Consultation E-mail: bctc@bctc-lab.com.cn

Complaint/Advice E-mail: advice@bctc-lab.com.cn

※※※※※ END ※※※※※