Antena Test Report

Customer Name： Rigel

Customer Project Name：866F

Band：WIFI2.4G/5.8G/BT

Version：A

Date：2024-10-14

Shenzhen Ruifeng Electronic Technology Co., Ltd.

No. 13, Lane 2, Hongling Community, Jinsha Community, Kengzi Street, Pingshan District, Shenzhen, China

Test system

Sequence Number	Test Item	equipment
S parameter	VSWR	Agilent 5071C & Agilent 5062A
OTA Test	TRP&TIS	Agilent 8960 E5515C& Agilent 4438C&CMW500 &CMW270 ETS&SATIMO
Gain & Efficiency	Gain & Efficiency	ETS&SATIMO Agilent 5071C

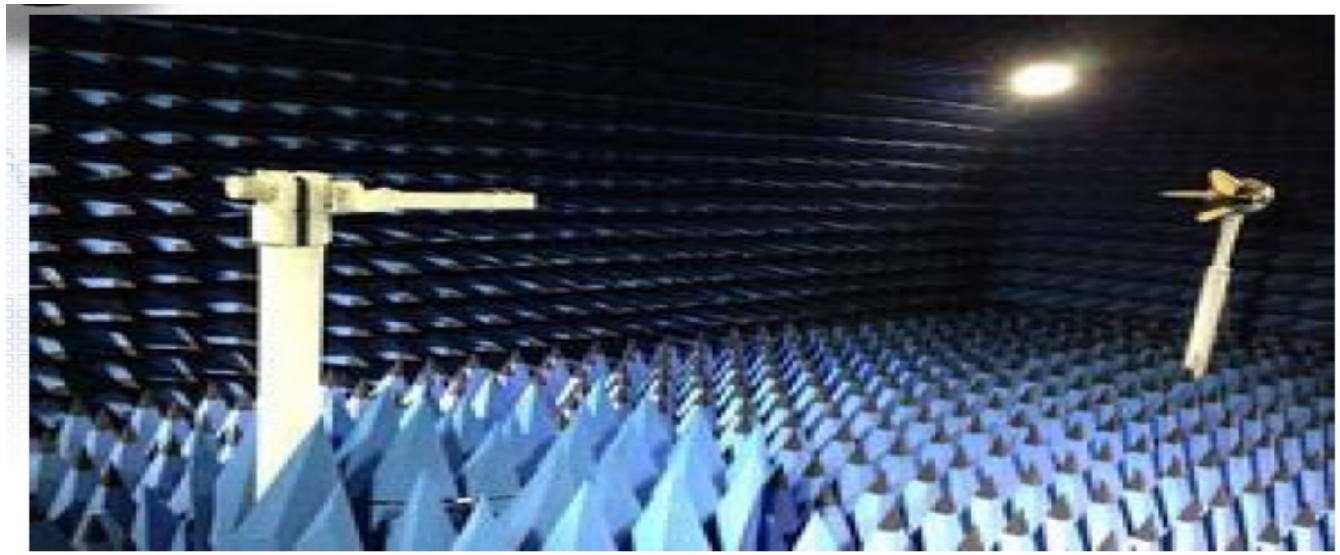

No modifications made to the motherboard circuit

Antenna Matching Network

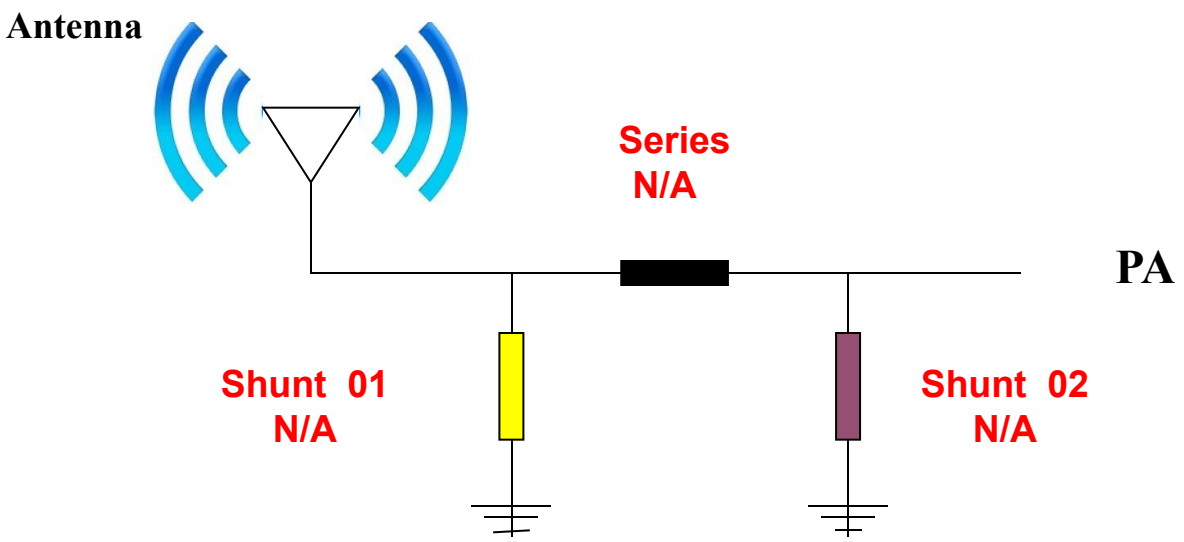

Location	Description	Vendor
Shunt 01	N/A	N/A
Series	N/A	N/A
Shunt 02	N/A	N/A

S11 SWR /Smith/ Log Mag--WIFI1

频率 (MHZ)	2400	2450	2500	5150	5300	5500	5700	5850
驻波比 (Standing wave ratio)	1.62	1.45	1.76	1.72	1.34	1.32	1.68	1.67

频率 (MHZ)	2400	2450	2500	5150	5300	5500	5700	5850
阻抗 (impedance)	40.6Ω	48.8Ω	55Ω	84Ω	67.1Ω	63.2Ω	69.5Ω	57.1Ω

频率 (MHZ)	2400	2450	2500	5150	5300	5500	5700	5850
回损 (Return loss)	-12.4	-14.6	-11.1	-11.4	-16.5	-16.9	-11.8	-11.9

S11 SWR /Smith/ Log Mag--WIFI2

频率 (MHZ)	2400	2450	2500	5150	5300	5500	5700	5850
驻波比 (Standing wave ratio)	1.86	1.6	1.4	1.35	1.37	1.34	1.34	1.21

频率 (MHZ)	2400	2450	2500	5150	5300	5500	5700	5850
阻抗 (impedance)	35.8Ω	32.4Ω	37.6Ω	65.9Ω	41.3Ω	40.1Ω	67.3Ω	54.4Ω

频率 (MHZ)	2400	2450	2500	5150	5300	5500	5700	5850
回损 (Return loss)	-10.4	-12.6	-15.5	-116.4	-16	-16.5	-16.5	-20.4

Gain & Efficiency WiFi1

Frequency (MHz)	Efficiency (%)	Peak GAIN (dBi)
2400	46. 68	2. 19
2450	47. 09	2. 27
2500	45. 43	2. 62
5150	48. 46	1. 92
5350	50. 79	1. 8
5550	46. 24	2. 54
5750	47. 17	2. 53
5850	47. 35	2. 51

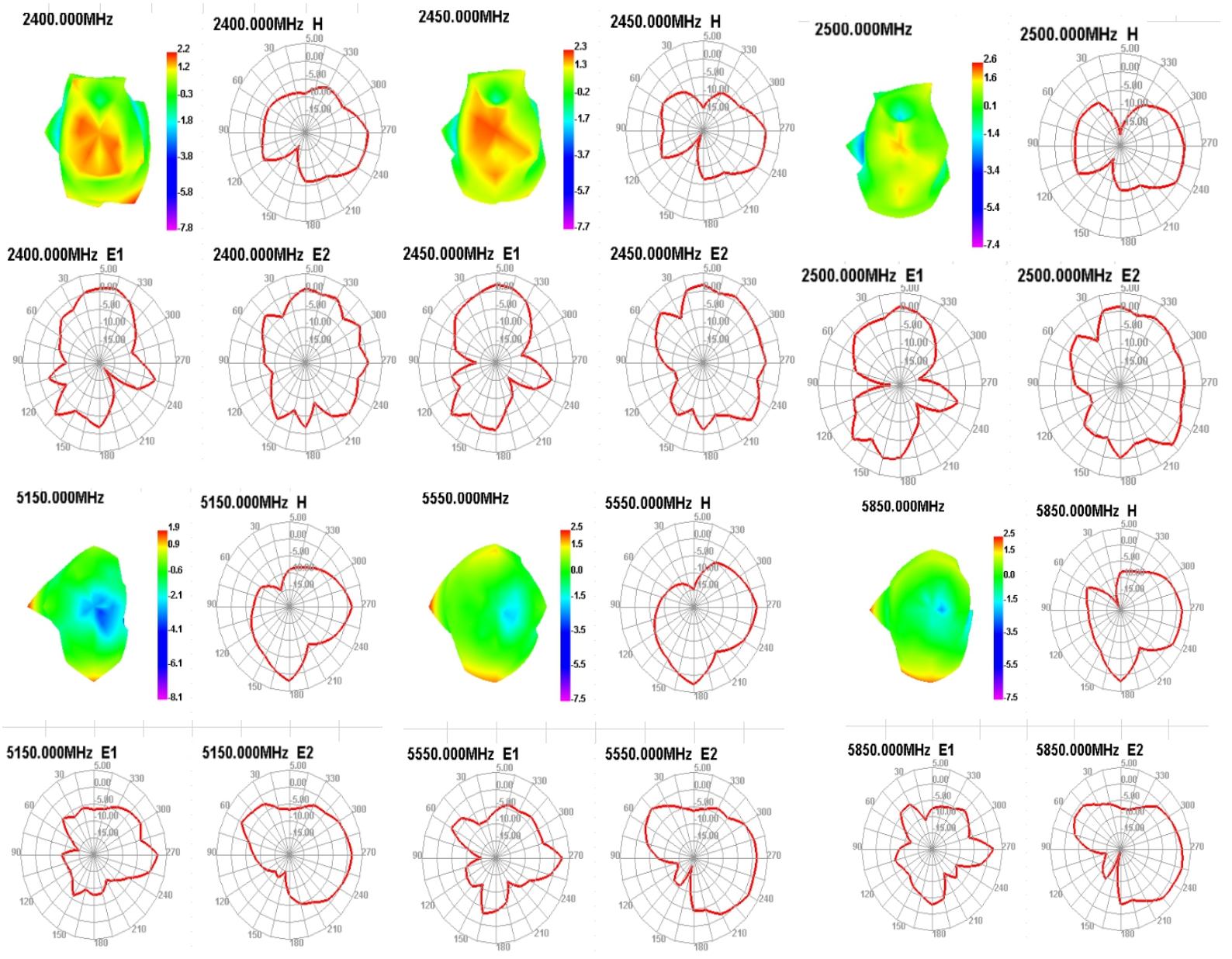

Gain & Efficiency-WiFi2

Frequency (MHz)	Efficiency (%)	Peak GAIN (dBi)
2400	47.46	1.5
2450	48.29	1.86
2500	46.93	1.37
5150	50.71	2.12
5350	49.32	1.6
5550	48.53	1.63
5750	47.62	1.66
5850	45.44	1.87

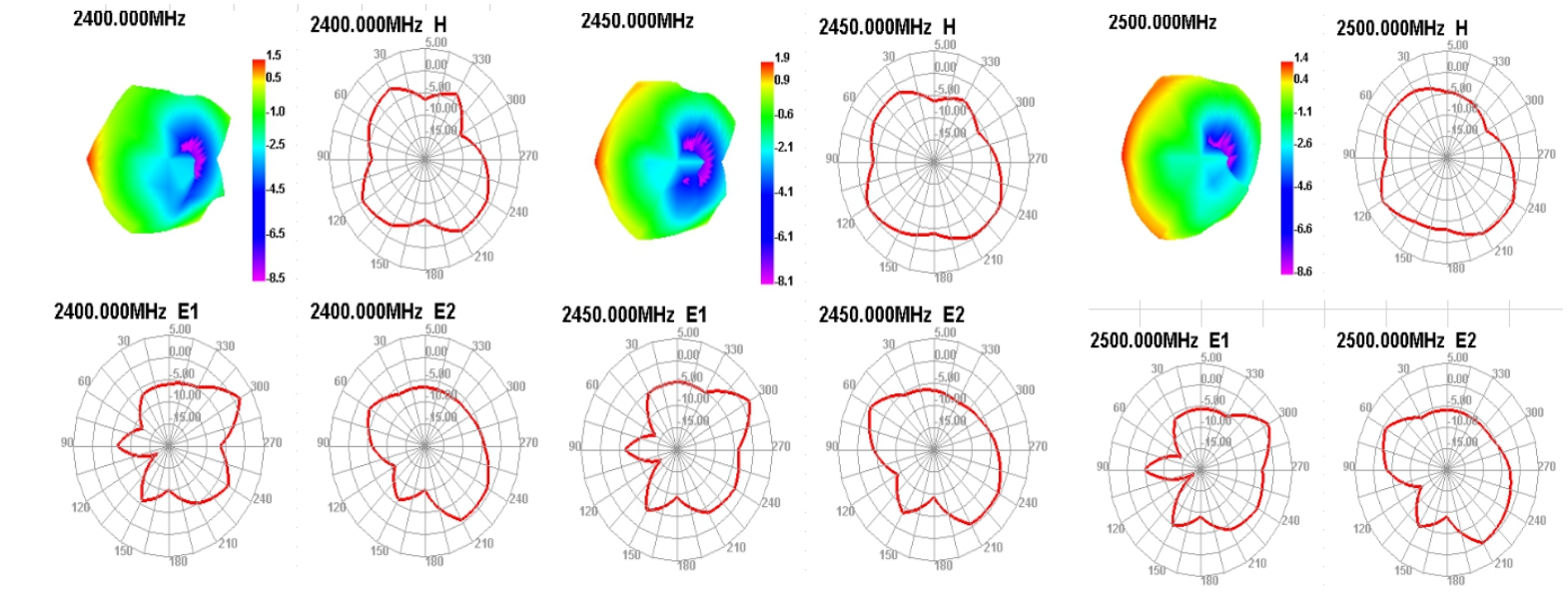

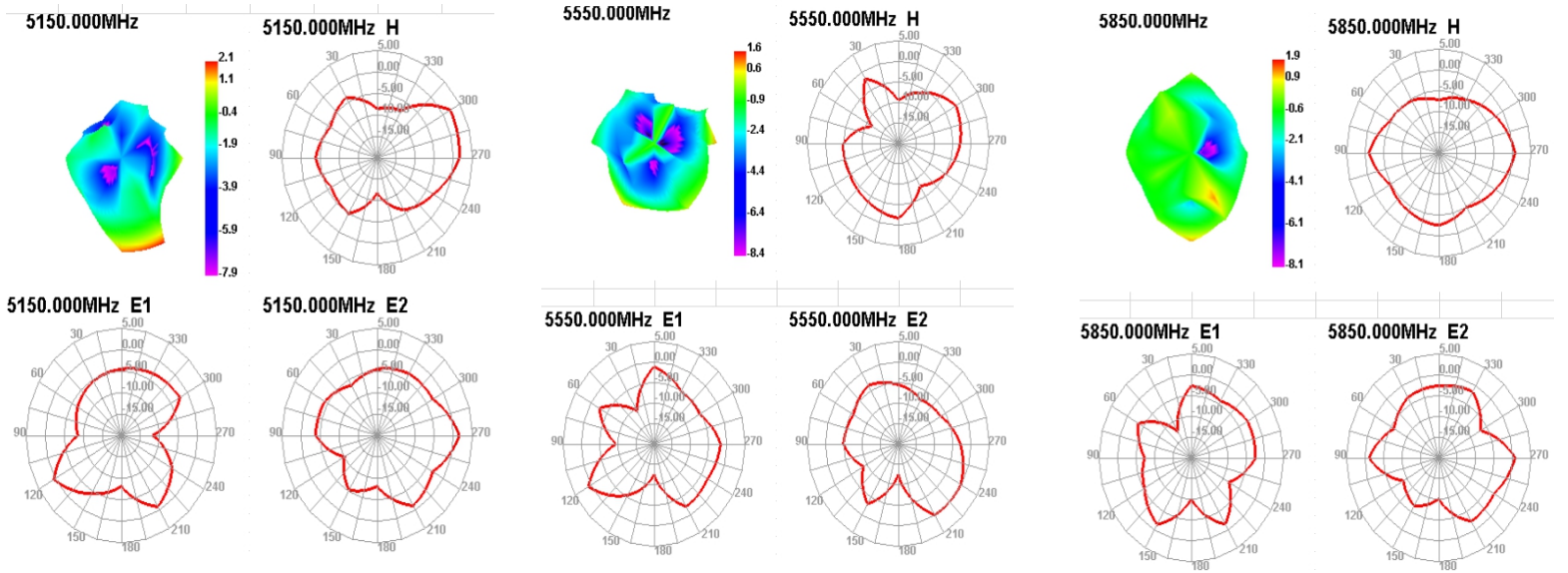

WIFI OTA Data

2.4G WIFI	TRP			TIS		
Channel	CH1	CH6	CH12	CH1	CH6	CH12
802.11b，11M	15.19	15.08	14.56	-83.04	-82.57	-81.36
802.11g,54M	14.16	13.97	13.68	-70.83	-69.68	-69.72
802.11n，MCS7(65M)	13.92	13.55	13.63	-68.53	-68.08	-67.91

5.8G WIFI	TRP			TIS		
Channel	CH36	CH60	CH165	CH36	CH161	CH165
802.11A，54M	12.19	11.06	11.02	-74.59	-73.67	-72.62
802.11n，MCS7(65M)	11.51	10.76	10.73	-71.72	-70.54	-69.79

precautions

Pay attention to avoiding power lines in the antenna installation area and try to stay away from the antenna as much as possible

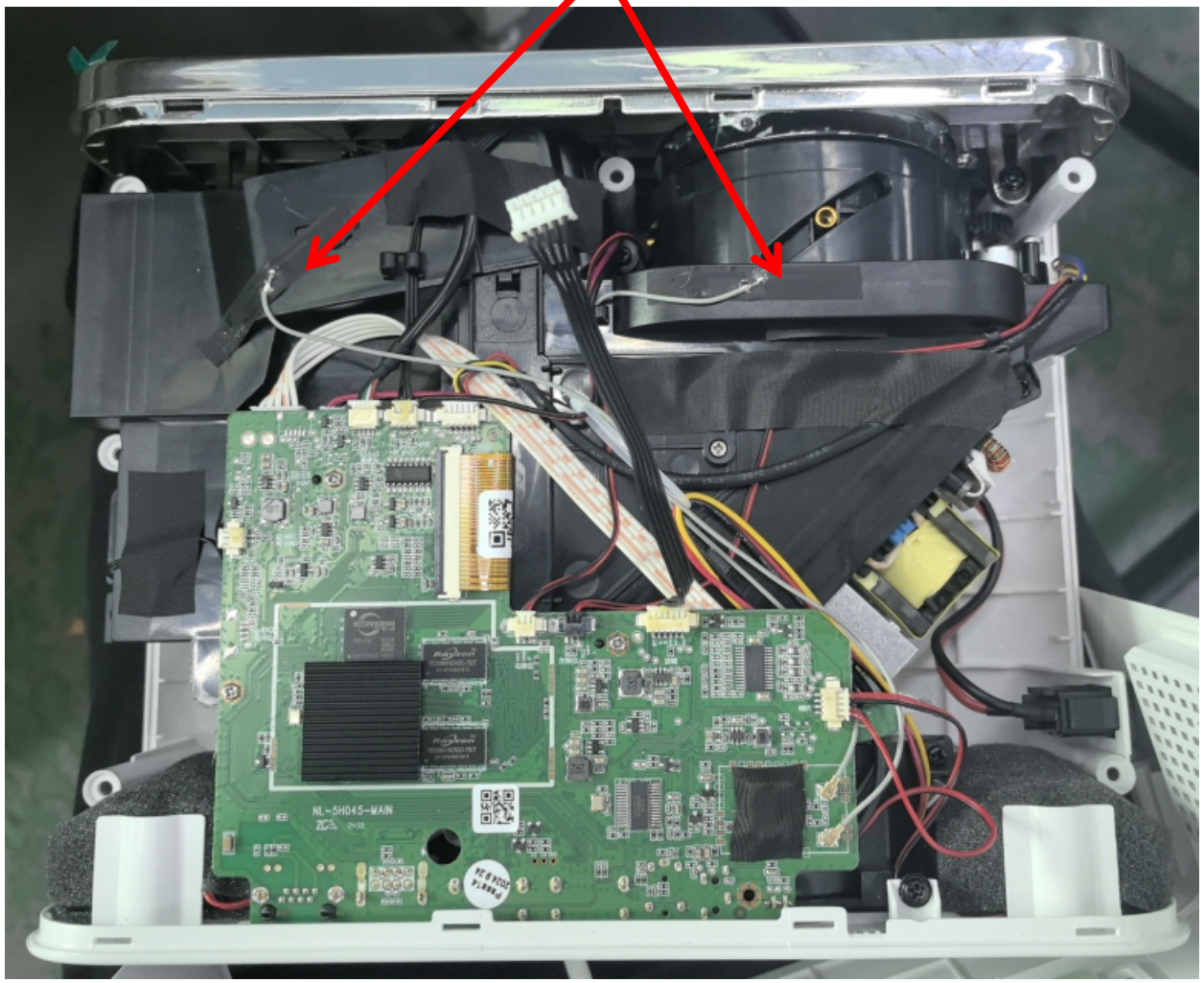

Installation diagram of WiFi antenna location

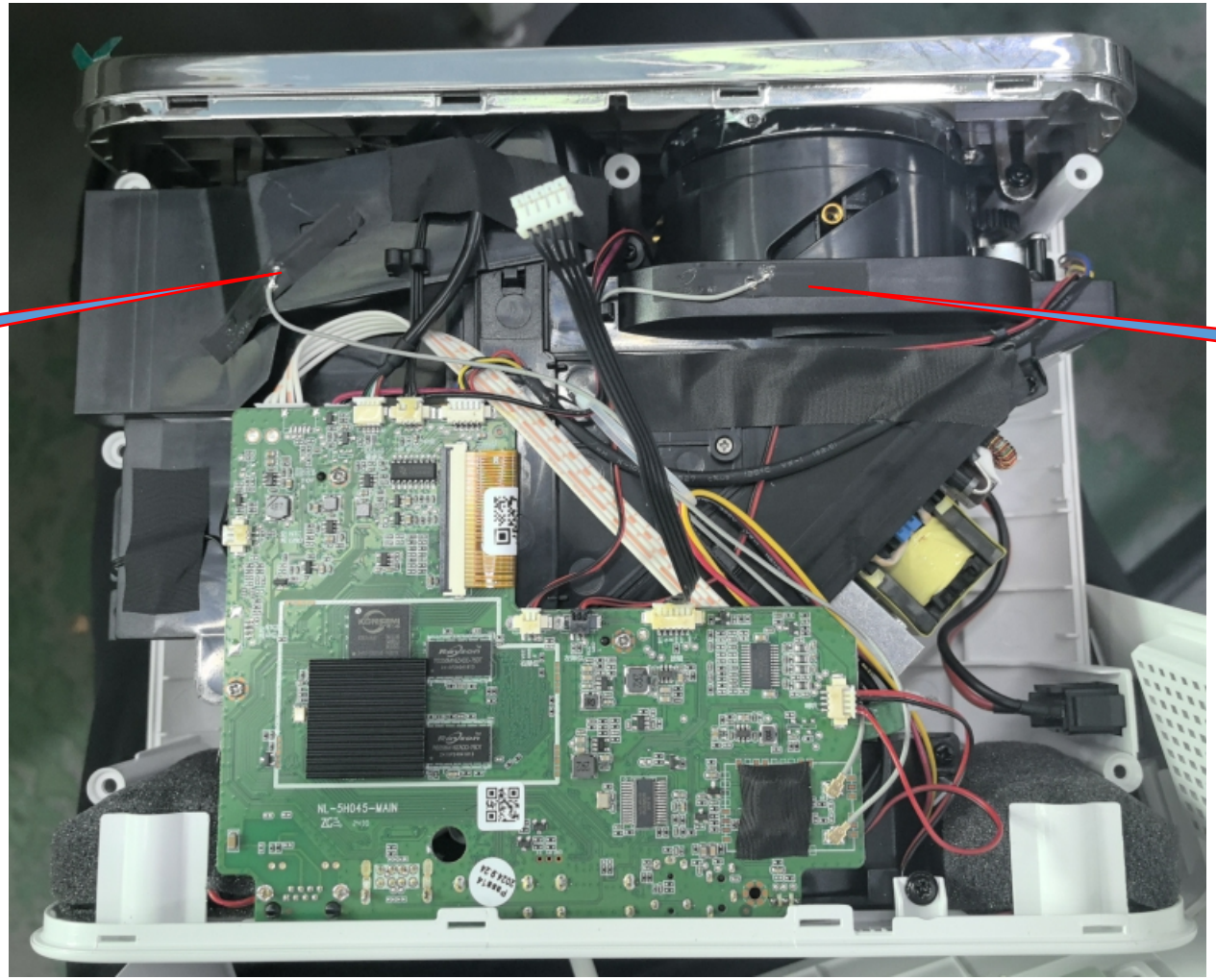

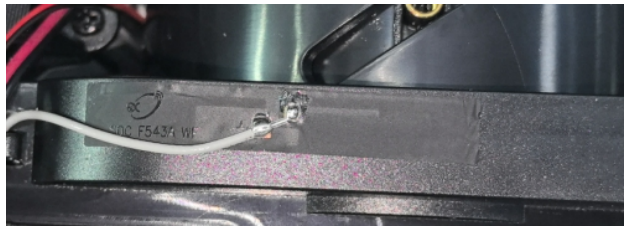

Installation position of board end seat

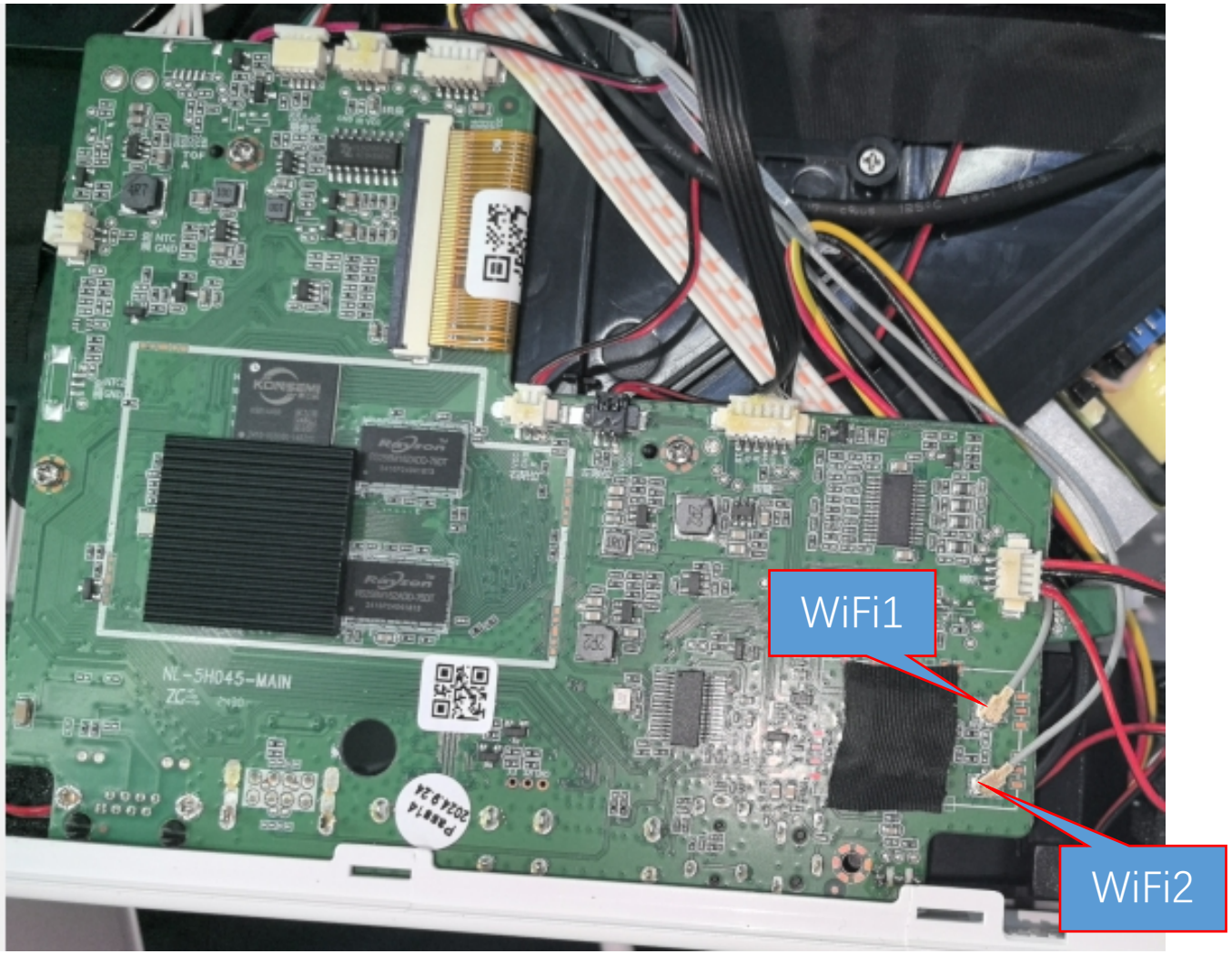

Thanks
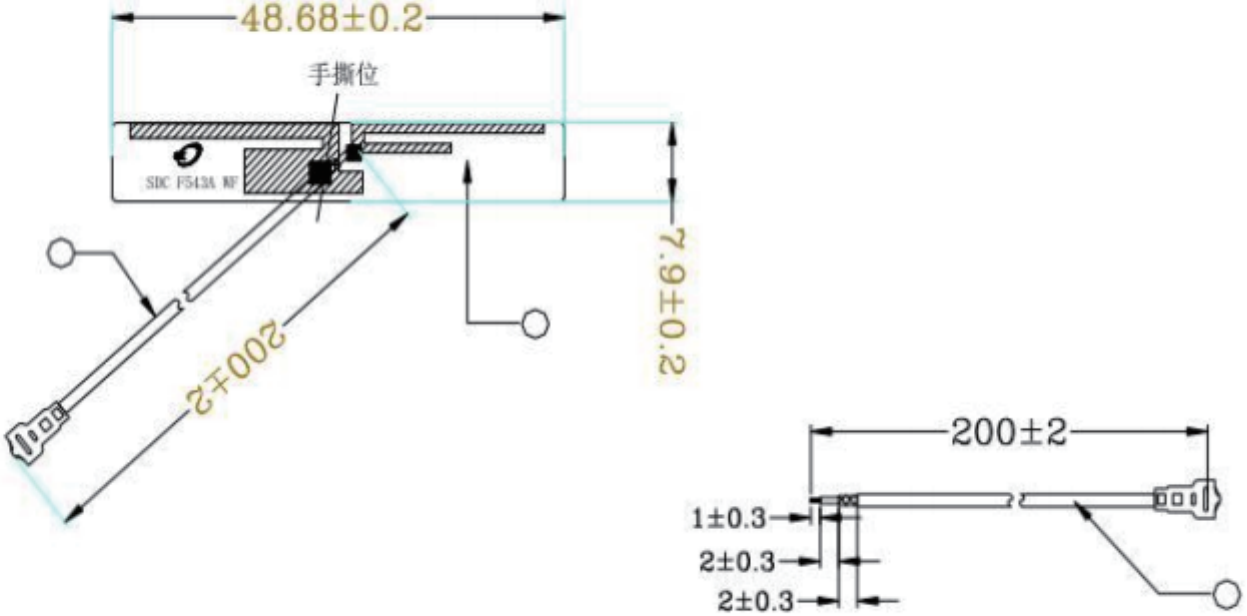
项目：886J
天线名称：wifi/蓝牙天线
规格描述： WF714B-1131L-200 2.4G/5.8G
用量：1台2用