User manual

Wireless wheel speed sensor module

RLWSSENSOR

ZH

foreword

About this user guide

- This article is a user guide for the following readers.
  - Users who use this product
- This guide classifies precautions and other matters as follows.
  - warn

    This content indicates that there is a "risk of serious injury or death".
  - pay attention to

    This content indicates that there is a "risk of injury".
  - remind

    This content indicates that there is a "risk of equipment damage".
  - notice

    Point out the main points that you need to follow in order to prevent product failure, damage or malfunction and data loss and protect the environment.
  - fill

    Point out descriptions, functional limitations, and other information that may be useful.
- All illustrations and screens shown in this guide are for convenience of explanation.
- All company names, product names and other such lists in this guide are registered trademarks or trademarks of their respective companies.
- Any changes and updates will be made without prior notice.
- All rights reserved. Unless otherwise specified, any part of this guide shall not be reproduced for any purpose without the prior written consent of our company.

introduce

Please read this user guide carefully before using the product. It will help you install, maintain and use this product. Within the scope permitted by law, the company will not be responsible for not following the user's guide or using products outside the annex. Our product and user guide will give you an overview of our product range.

All our products have detailed data tables.

Please contact our support department if you need any additional help to find the content, whether online or outside this guide.

For your safety.

In order to ensure that you can use this instrument safely, please follow the instructions and precautions described in this manual when operating. If you violate the operating procedures, the protection provided by this instrument may be damaged. Our company is not responsible for product problems and failures caused by violating these instructions and precautions.

■ Please do not operate this instrument in flammable gas, explosive gas or places with steam. It is very dangerous to use this instrument in such an environment. Using this instrument for a long time in the environment with high concentration of corrosive gas (H2S, SOX, etc.) is easy to cause failure.

■ Appropriate shielding measures should be taken in the following occasions near the power supply power line.

In the situation of strong electric field or strong magnetic field
External connection in static electricity or AC contactor interference and other similar occasions.

■ Please connect this instrument with the measured object or external control loop after confirming that the grounding protection has been carried out. When wiring the instrument terminal and plugging and unplugging the terminal, please be sure to disconnect the power supply before operation. Please connect the lead to the terminal before plugging it into the instrument.

■ Power Supply

Before turning on the power supply of this instrument, please make sure that the supply power supply voltage is consistent with the instrument power supply voltage, and carefully check whether the wiring is correct. The interval between power-off and power-on of the instrument must be more than 5s.

■ Please do not use the instrument in the following situations where it is exposed to direct sunlight;
Where the temperature and humidity exceed the use conditions; Where there is corrosive gas or combustible gas;
Where there is a lot of dust, salt and metallic powder; Where water, oil and chemical liquid are easy to splash; Where there is direct vibration or impact;

■ Damage of protective device
Please follow the method described in this user manual, otherwise the protection device in the instrument may be damaged. Do not repair or disassemble the instrument by yourself.

■ Do not open the shell of the instrument to repair and disassemble the equipment without the consent of our maintenance technicians or our recognized technicians.

FCC WARNING

This device complies with part 15 of the FCC Rules. Operation is subject to the following two conditions: (1) this device may not cause harmful interference, and (2) this device must accept any interference received, including interference that may cause undesired operation.
Any changes or modifications not expressly approved by the party responsible for compliance could void the user's authority to operate the equipment.
NOTE: This equipment has been tested and found to comply with the limits for a Class B digital device, pursuant to Part 15 of the FCC Rules. These limits are designed to provide reasonable protection against harmful interference in a residential installation. This equipment generates, uses and can radiate radio frequency energy and, if not installed and used in accordance with the instructions, may cause harmful interference to radio communications.
However, there is no guarantee that interference will not occur in a particular installation. If this equipment does cause harmful interference to radio or television reception,
which can be determined by turning the equipment off and on, the user is encouraged to try to correct the interference by one or more of the following measures:
-- Reorient or relocate the receiving antenna.
-- Increase the separation between the equipment and receiver.
-- Connect the equipment into an outlet on a circuit different from that to which the receiver is connected.
-- Consult the dealer or an experienced radio/TV technician for help.
To maintain compliance with FCC's RF Exposure guidelines, This equipment should be installed and operated with minimum 20cm distance between the radiator and your body: Use only the supplied antenna.

GENERAL INDTRUCTION

There are two modules for detecting wheel speed, two modules for detecting temperature, four wireless wheel speed sensors and one wireless acquisition module in the wireless wheel speed sensor. The wireless wheel speed sensor SENWS1 is combined with the wireless acquisition module, which is the wireless wheel speed system. In this system, the wireless wheel speed sensor SENWS1 is the transmitter and the wireless acquisition module is the receiver.

The wireless wheel speed sensor SENWS1 is a device that can detect the wheel speed and temperature in real time. Each sensor in the wireless wheel speed system can synchronously collect the rotating speed and temperature of wheels in real time, and multiple sensors can synchronously detect the rotating speed and temperature of multiple wheels in real time, and send the data to the wireless acquisition module by wireless communication.

The wireless acquisition module, that is, the receiving end outputs data from the CAN interface/Ethernet interface, which makes it very convenient to monitor the speed and temperature of wheels.

Sensor module (transmitter)

Data transceiver (receiving end)

Product features

- Multi-channel real-time transmission of wheel speed and temperature
- Multi-sensor real-time measurement synchronous transmission data
- Wireless transmission, accurate data and fast transmission.
- Fixture installation suitable for different specifications of tires, easy to install and convenient to transport.
- The protection level is IP67, and the measurement is still accurate under complicated and harsh conditions.

attachment

Attached accessories

Ensure that this product comes with all accessories.

1

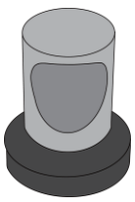

Magnet

2

Charger

3

Adaptive antenna

Optional accessories

You can also purchase the following optional products to match this product.

Wheel speed sensor fixture (sleeve 17, 19, 21, optional 23)

Custom power cord 1M

performance parameter

specifications

The specifications of this product are as follows.

transmitting terminal

• Wheel speed measuring range	±3000 rpm
• Wheel speed measurement error	< 0.5% (0℃ to +50℃)
• Wheel speed measurement noise	<0.01%(25 ℃)
• Temperature measuring range (K thermocouple)	-200℃ to+1200℃ ta =+25℃
• Temperature full-scale linear error	... 0.05% fs
• Internal sampling rate	1 kHz
• Wireless communication frequency	2.4-GHz-Band 100 Hz
• Transmission frequency	20 h(-20 ℃)/72 h(25 ℃)
• Battery life	IP67
• the protection grades	-20 C to+60 C
• Working temperature	

receiving terminal

• supply voltage	9-36 V DC
• Communication protocol	CAN 2.0b 500KBaud
• Wireless communication frequency	2.4-GHz-Band
• Working temperature	-20℃ to +65 ℃1.33%&<7 ms (20 m in open space)
• Packet loss rate and delay	1.39%&<4 ms (in-vehicle reception) 6.28%&<7 ms (sheltered)

Performance parameters
> size

Dimension

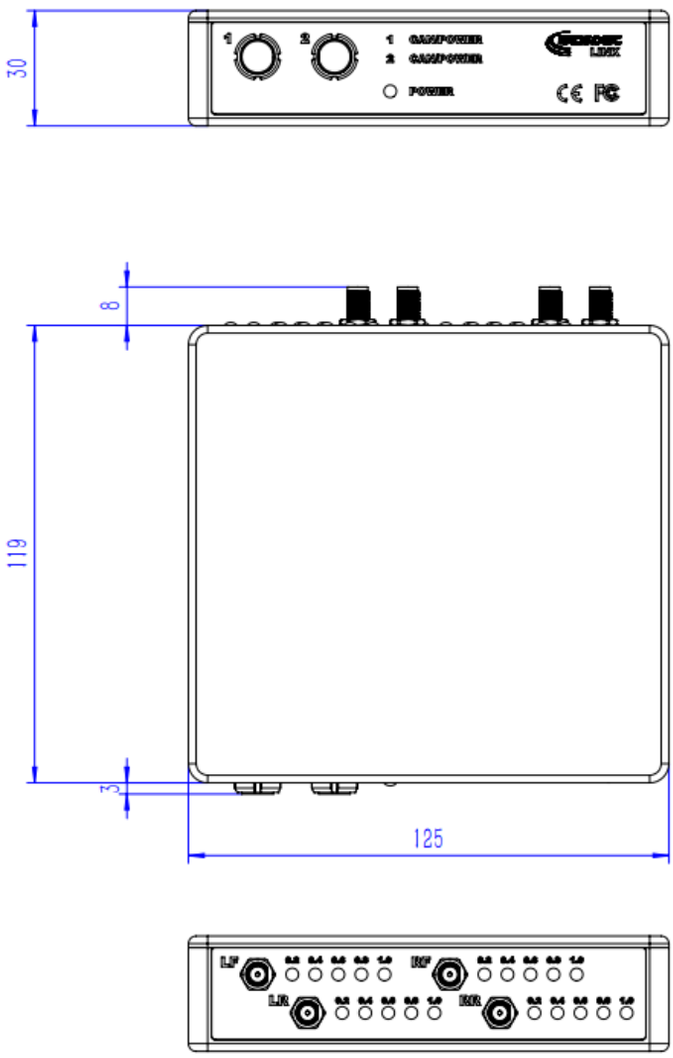

transmitting terminal

• Installation position

LF: left front wheel RF: right front wheel LR: left rear wheel RR: Right rear wheel

• Temperature acquisition channel

T1: temperature channel 1 T2: temperature channel 2

• Power switch and indicator light

When the equipment is in the power-off state, use a special magnet to lightly press the indicator light position of the wireless wheel speed sensor before lifting it. After the red indicator light is short, the green indicator light is on, and the equipment starts to work when it is powered on. When the equipment is working, use a special magnet to lightly press the indicator light of the wireless wheel speed sensor and then lift it up. The green indicator light goes out and the power supply is turned off.

When the indicator light turns red, it means that it needs to be charged as soon as possible. Similarly, whether the power supply of the equipment is enough for work can be prompted by the sensor power indicator light on the wireless acquisition module.

• Equipment charging

When the device is red (or only one of the five indicator lights at the receiving end is on), please use the 12.6V charger configured for this product to charge the device as soon as possible.

Receiving terminal

•Cable connector CAN interface: including two CAN connectors, and there is no difference in functions between CAN1 and CAN2. Used for input and output of CAN signal and power supply at receiving end.

stitch	Signal name	function
one	Power+	Power supply, positive pole
2	Power-	Power supply, negative pole
three	CAN H	CAN signal is high
four	CAN L	CAN signal is low
five	NC	

Front view of CAN interface

Antenna interface: 2 pairs, using 2.4G Hz antenna connector, and numbers 1 and 2 are marked under the antenna connector.
When using the wireless wheel speed sensor, please install the adaptive antenna at the antenna interface of the receiving end. The wireless wheel speed sensor label LF is connected to the antenna interface 1L, the wireless wheel speed sensor label RF is connected to the antenna interface 1R, the wireless wheel speed sensor label LR is connected to the antenna interface 2L, and the wireless wheel speed sensor label RR is connected to the antenna interface 2R.

ETHERNET interface: one is used to communicate with the upper computer. The Ethernet interface includes two status indicators, yellow on the left and orange on the right, which represent the network data transmission status. When the yellow indicator flashes, it represents the normal data transmission, and when the orange indicator is always on, it represents the normal working speed.

• Sensor electricity indicator lamp
LF: left front wheel RF: right front wheel LR: left rear wheel RR: right rear wheel
It is used to display the current power of each sensor, and the LED lights corresponding to the numbers 0.2, 0.4, 0.6, 0.8 and 1.0 indicate the power of each sensor.
All five lights are on, which means that they are fully charged. Every time one light is turned off, the power consumption is reduced by 20%. When only one light is on, the corresponding sending end needs to be recharged as soon as possible before use. If none of the lights is on, it means that the receiving end has not received the data of the corresponding sending end (that is, it means that the wireless communication between the receiving end and the sending end is not connected).

• Sensor power indicator lamp
It is used to indicate that the current wireless wheel speed sensor is connected to the receiving end. When the wireless wheel speed sensor is connected, the sensor power indicator with number 1 is always on, and the sensor power indicator light is on at the same time.

• Power indicator PWR
When the power is turned on, the light always turns red, and the equipment starts to work. When the power is turned off, the light goes out and the equipment stops working.

• CAN transmission indicator CAN
The flashing green light indicates that the CAN message is being transmitted.

Antenna installation

If a wireless wheel speed system is equipped with four wireless wheel speed sensors, it will be equipped with four antennas.

The antenna is magnetic, which can be installed on the car conveniently and quickly. The antenna is installed outside the car, and each antenna is installed directly above the corresponding tire. The antenna connecting wire bypasses the right top of the car door and is connected to the antenna interface position of the receiving end in the car.

Fixture installation

Install according to the following steps

1 Install the fixing claws in the fixture of the wireless wheel speed sensor on the bolts on the tire, and the number of the fixing claws is determined according to the number of the bolts on the tire.

2 Sleeve the matching sleeve for fixing the claw in the fixture of the wireless wheel speed sensor onto the claw and press and fix it.

3 Prepare the cup head screw of the mounting plate in the fixture, and put the round fir gasket on the cup head screw M6*60.

4 Install the numbered face of the mounting plate in the fixture outward to the tire, and the numbered position is aligned with the threaded hole of the fixing claw, and the numbered position corresponds to the number of claws. If there are five claws, insert the cup head screw with the round fir gasket into the number 5 on the mounting plate.

5 Slide the sequoia gasket onto the surface of the mounting plate, use an Allen wrench to lock the sleeve and the claw by fixing the cup head screw, and the locking degree is adjusted by the cup head screw.

6 Use an Allen wrench to fix the wireless wheel speed sensor on the mounting plate of the fixture through a countersunk head screw M5*12.

Installation > fixture installation

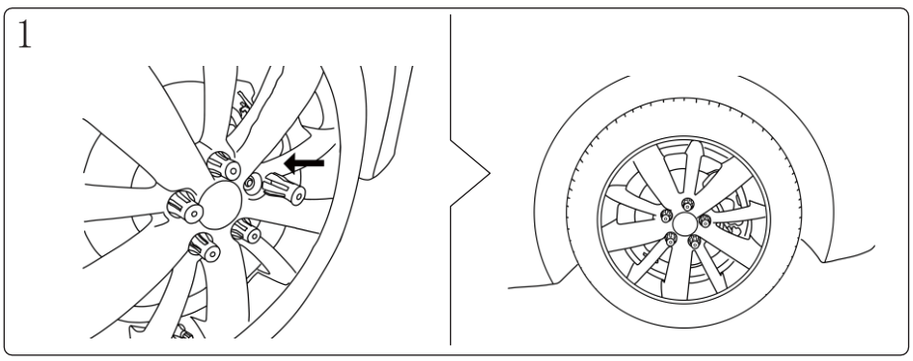

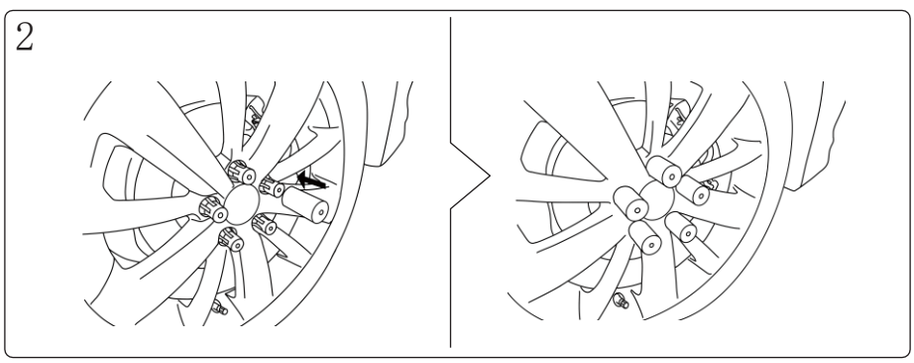

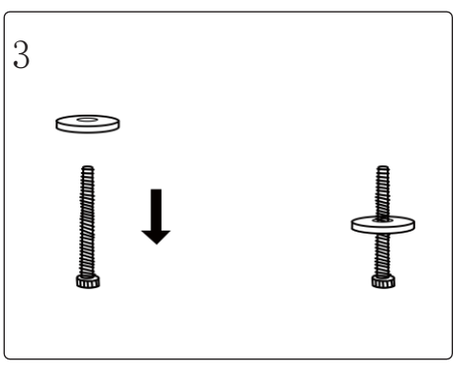

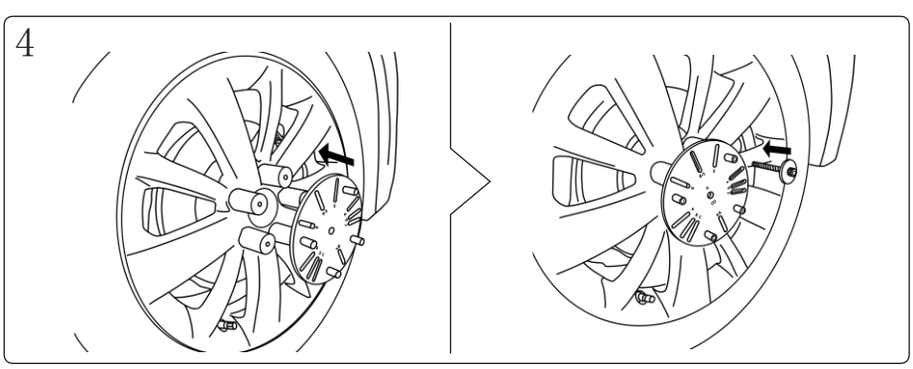

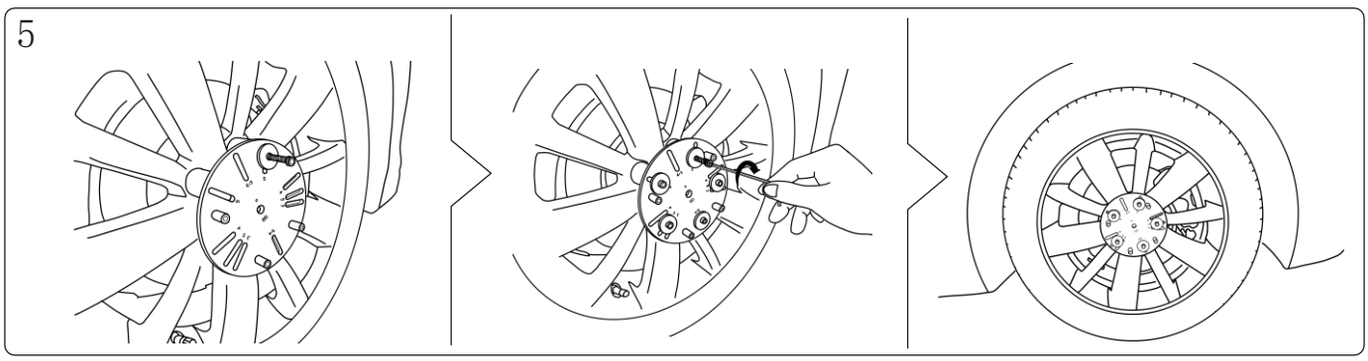
5

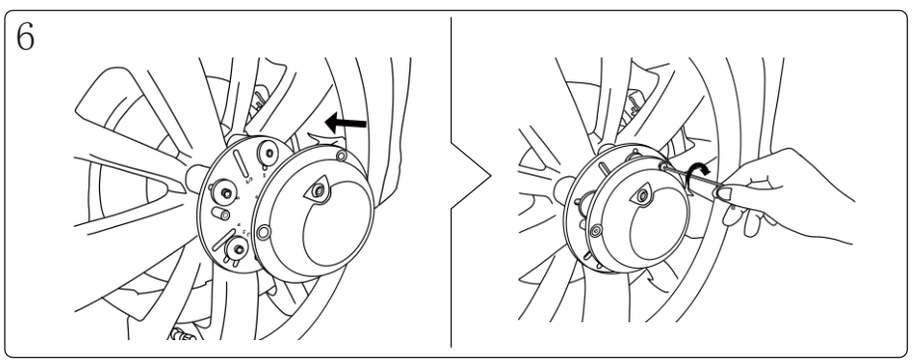
6

Fixture disassembly

Remove according to the following steps

1. Remove the countersunk screws M5*12 that fix the wireless wheel speed sensor by the Allen key in turn, and remove the wireless wheel speed sensor.

2. Use an Allen wrench to remove the cup head screw M6*60 in turn, and then remove the installation disk after the full-tone cup head screw is removed.

3. Remove the matching sleeves from the fixture of the wireless wheel speed sensor in turn.

4. Remove the fixed claws in turn to complete the disassembly of the wireless wheel speed sensor fixture.

Remind

Do not pull out the mounting plate, sleeve and claw from the tire until all the cup head screws are removed, so as not to damage the sleeve and claw.

FCC WARNING
This device complies with part 15 of the FCC Rules. Operation is subject to the following two conditions: (1) this device may not cause harmful interference, and (2) this device must accept any interference received, including interference that may cause undesired operation.
Any changes or modifications not expressly approved by the party responsible for compliance could void the user's authority to operate the equipment.
NOTE: This equipment has been tested and found to comply with the limits for a Class B digital device, pursuant to Part 15 of the FCC Rules. These limits are designed to provide reasonable protection against harmful interference in a residential installation. This equipment generates, uses and can radiate radio frequency energy and, if not installed and used in accordance with the instructions, may cause harmful interference to radio communications.
However, there is no guarantee that interference will not occur in a particular installation. If this equipment does cause harmful interference to radio or television reception,
which can be determined by turning the equipment off and on, the user is encouraged to try to correct the interference by one or more of the following measures:
-- Reorient or relocate the receiving antenna.
-- Increase the separation between the equipment and receiver.
-- Connect the equipment into an outlet on a circuit different from that to which the receiver is connected.
-- Consult the dealer or an experienced radio/TV technician for help.
To maintain compliance with FCC's RF Exposure guidelines, This equipment should be installed and operated with minimum 20cm distance between the radiator and your body: Use only the supplied antenna.