Phone Stand with Bluetooth Speaker

Instruction manual

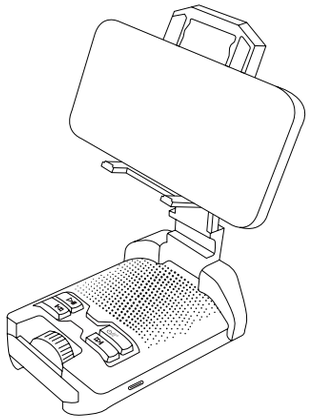

Model: GO X

Thank you for purchasing our product.

In order to make full use of the new Phone Stand with Bluetooth Speaker, we kindly invite you to read these instructions prior to use.

Note: Before using this product, please use a Type-C cable to connect it to the power source first.

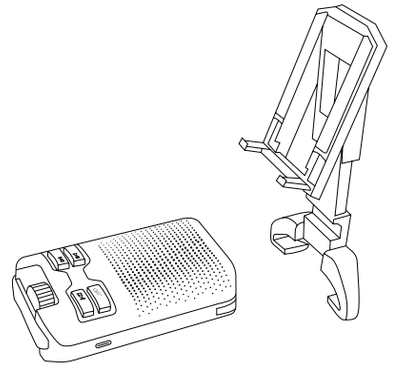

Unboxing Check

Instruction manual contains necessary safety advice and user instructions, follow the instruction manual to operate in order to avoid damaging the product for misuse. Check whether the product is damaged or not when you receive the product.

Package List

Phone Stand Speaker x 1
USB cable x 1
User manual xl

Warnings

The power requirement of this product is USB DC 5V/1A. Once the range exceeded, please use the regulator device, otherwise it will affect its service life.

Product Specification

Product model: GO X
Product material: ABS
Product weight: 298g
Type-c Input: DC 5V 1A
Power of speaker: 4Ω5W
Battery capacity: 1500mAh
Bluetooth version: Bluetooth 5.0
Bluetooth name: GO X
Charging time: about 2-3hours
Product size: 4.92x3.35x1.97 inches

Features

- With a detachable phone stand, free your hands
- Wireless Bluetooth connection support
- Bluetooth hands-free audio
- Portable speaker - enjoy music anywhere/anytime
- Compatible with most smartphones/tablets/laptops

Key Function

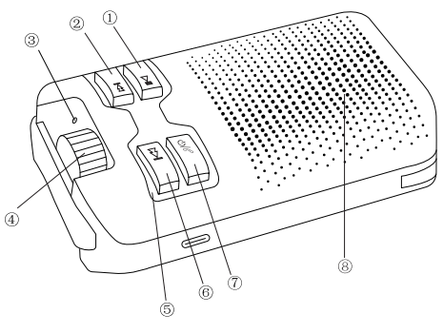

① Pause/Play/Light Effect
Short press - Pause/Play
Long press - Change light effect

② Previous/Light Off
Short press - Previous song
Long press - Turn off the lights

③ Microphone

④ Volume up/down
Twist clockwise - Volume up
Twist counterclockwise - Volume down

⑤ LED Lights

⑥ Next Song/Light Effect
Short press - next song
Long press - run all light effects.

⑦ Answer/Hang up/Power on/off
Short press - Answer/Hang up
Long press 2-3secends - the Speaker ON/OFF

⑧ Speaker

Adjust the angle and height of the phone stand

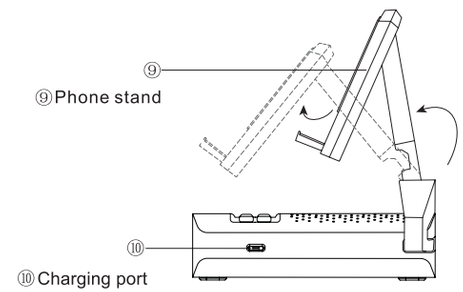

When the phone stand is folded, this lever is locked. Please pull up this lever first, then you can adjust the height of the phone stand.

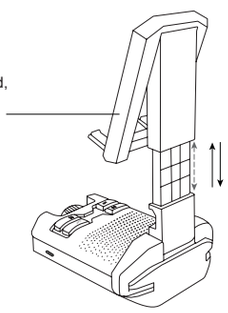

Unfold the phone stand

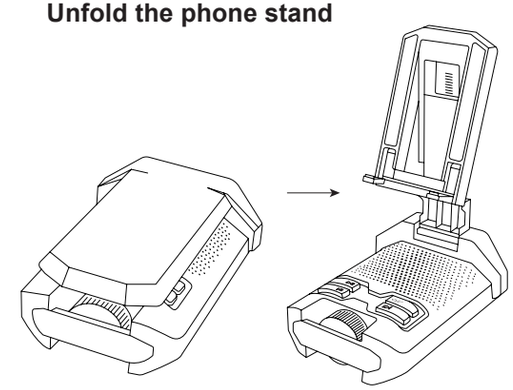

There are multiple lighting effects for you to choose. Long press ① to change the color and flash mode of the light.

When an incoming call rings, short press ⑦ to answer through the built-in mic of the speaker.
Music pauses during the call and plays again when the call ends.

Activate Bluetooth & Pair with your cellphone

1. The device automatically enters Bluetooth mode after it is turned on.
2. Wait for 'GO X' to appear on your Bluetooth device list. Click it to pair with your cellphone.
3. When you hear the voice "Bluetooth connected", your cellphone and the speaker Bluetooth connection is successful.

Notice:

1. Strictly in accordance with the instructions of this operation, do not disassemble the host and accessories.
2. This product is suitable for indoor use.
3. When listening to music, please keep a proper volume.

If you have any questions about this product, please contact us in time, we will promptly answer you.
Thank you.

UK CA FC CE RoHS
MADE IN CHINA

FCC Warnning:

This equipment has been tested and found to comply with the limits for a Class B digital device, pursuant to part 15 of the FCC Rules. These limits are designed to provide reasonable protection againstharmful interference in a residential installation. This equipment generates, uses and can radiateradio frequency energy and, if not installed and used in accordance with the instructions, maycause harmful interference to radio communications. However, there is no guarantee thatinterference will not occur in a particular installation. If this equipment does cause harmfulinterference to radio or television reception, which can be determined by turning the equipmentoff and on, the user is encouraged to try to correct the interference by one or more of thefollowing measures:

- Reorient or relocate the receiving antenna.
- Increase the separation between the equipment and receiver.
- Connect the equipment into an outlet on a circuit different from that to which the receiver is connected.
- Consult the dealer or an experienced radio/TV technician for help.

Caution: Any changes or modifications to this device not explicitly approved by manufacturer could void your authority to operate this equipment.

This device complies with part 15 of the FCC Rules. Operation is subject to the following two conditions:

(1)This device may not cause harmful interference, and (2) this device must accept any interference received, including interference that may cause undesired operation.

This equipment complies with FCC radiation exposure limits set forth for an uncontrolled environment. This equipment should be installed and operated with minimum distance 0cm between the radiator and your body.