SINJET

Product Manual

Product Name: Headrest Entertainment Screen

Product Model: BS02

Compatible Vehicle Models: Universal

www.sinjet.net

Thank you for choosing Sinjet's range of products. Please read this manual carefully before using the product. If you have any questions or need assistance during use, please feel free to contact us.

SINJET

Table of Contents:

Product Overview

- Product Name
- Model
- Device Specifications

Package Contents

Installation Instructions

User Instructions

- Safety Precautions
- Maintenance and Care

Troubleshooting Guide

Warranty and After-Sales Service

Contact Information

Product Overview:

Product Name:

Sinjet Multifunctional Headrest Entertainment Screen

Product Model:

BS02

Device Specifications:

- Screen Resolution: 1920*1080,
- Screen Type: IPS Touch HD Screen
- Screen Size: 13.3 inches, narrow bezel
- Storage Capacity: 64GB
- RAM: 4GB
- CPU Model: 8-core Qualcomm 6125, automotive grade
- Speaker Type: 4Ω 2W
- Ports and Types:
  - Type-C
  - USB-A 2.0
- Operating System: Android 13
- Wireless Connectivity: WiFi 2.4G/5G, Bluetooth 2.4G

4o

SINJET

Package Contents:

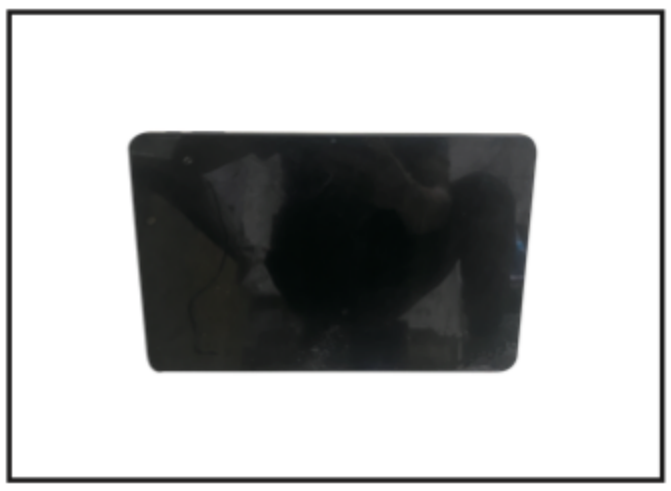

Rear Seat Entertainment Screen

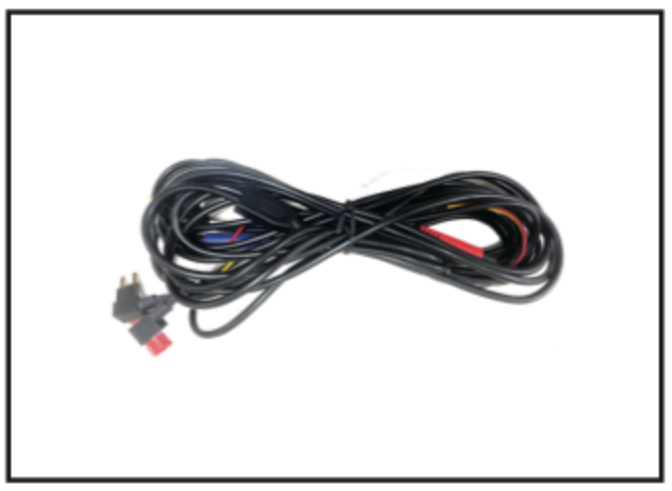

Power Cable

Cable Ties

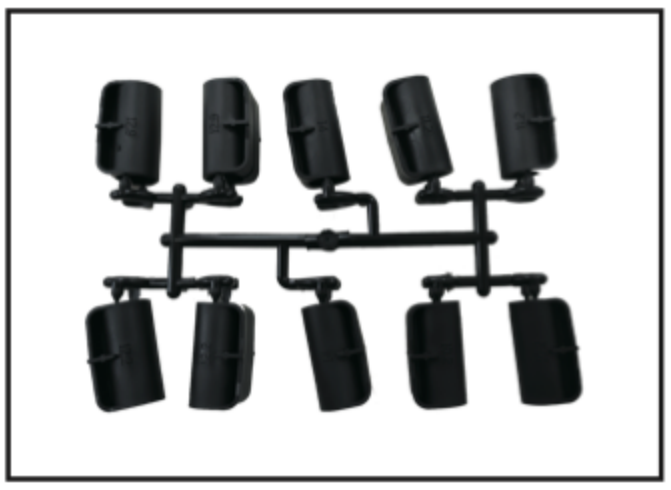

Multi-Size Mounting Rings

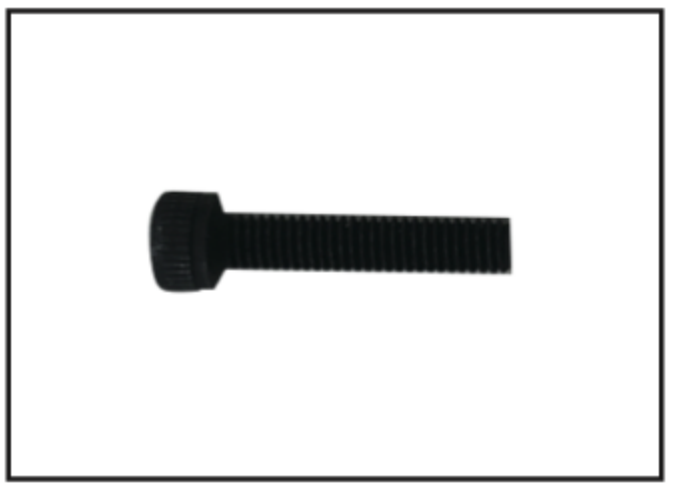

Screws

Mounting Bracket

Installation Instructions:

Installation Precautions:

-Turn off the vehicle's power before installation.
-Be cautious to avoid damaging the dashboard or other interior components during installation.
-Ensure that clips, claws, and other fasteners are not damaged when removing vehicle parts.
-Confirm the installation status of automotive parts before disassembling them.

Installation Location:

a. Power Source: Fuse box.
b. Mounting: Headrests of driver and passenger seats.

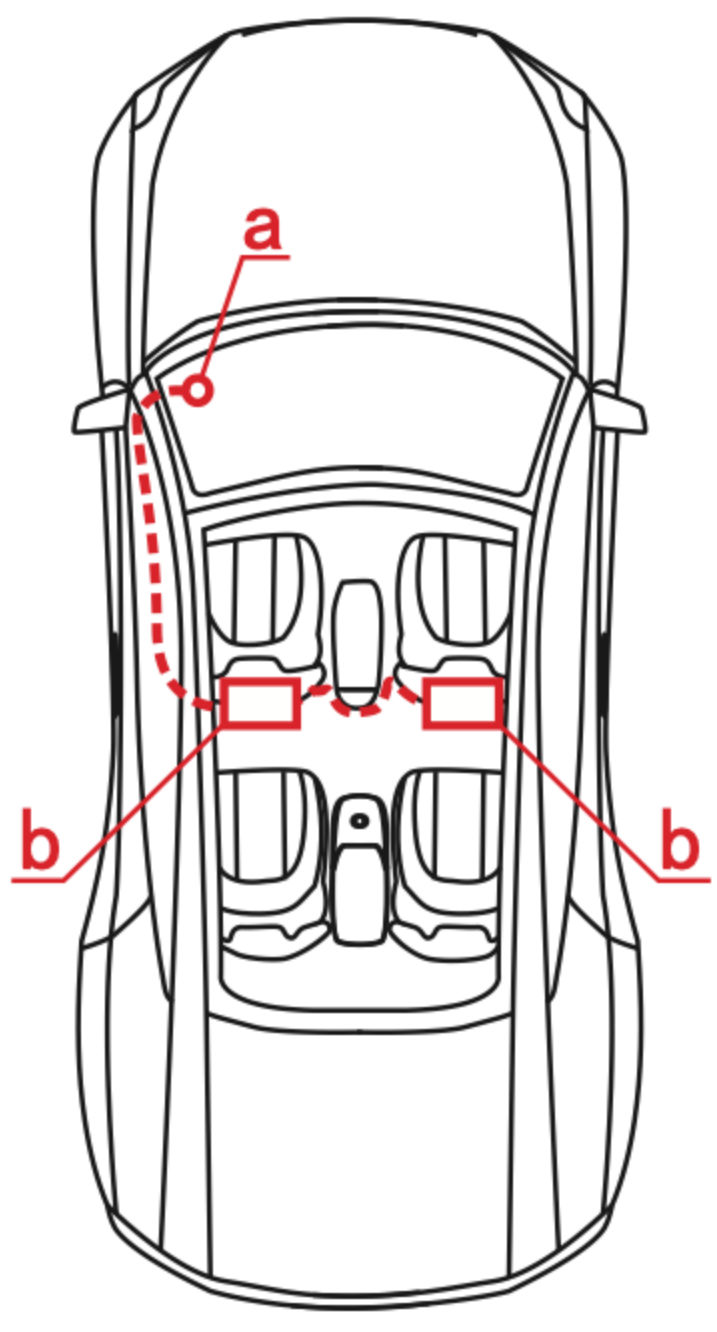

Wiring Diagram:

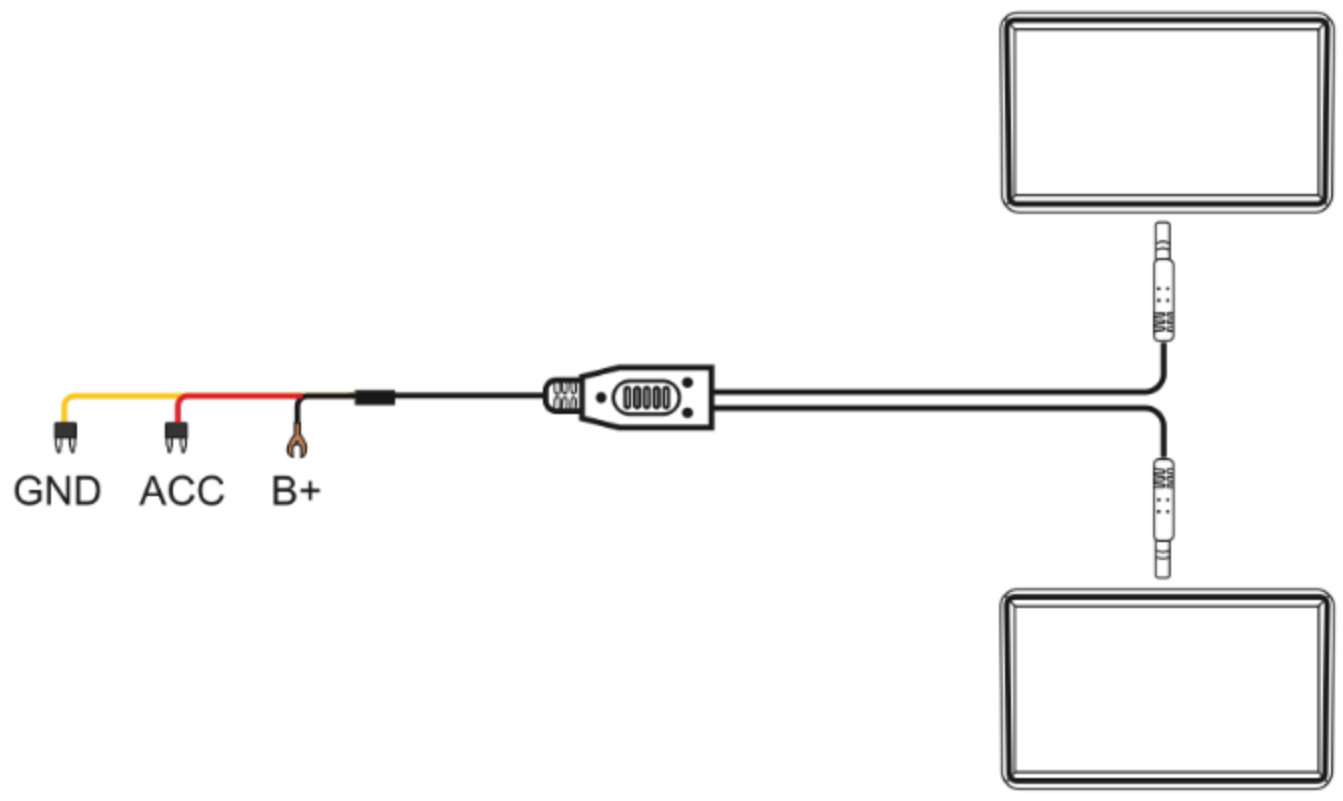

Power Connection Diagram:

When connecting to the power supply, prioritize using vacant slots in the fuse box.

- +12V (B+): Constant power source.
- ACC: Key-controlled power source.
- GND: Ground connection (locations may vary depending on vehicle configuration).

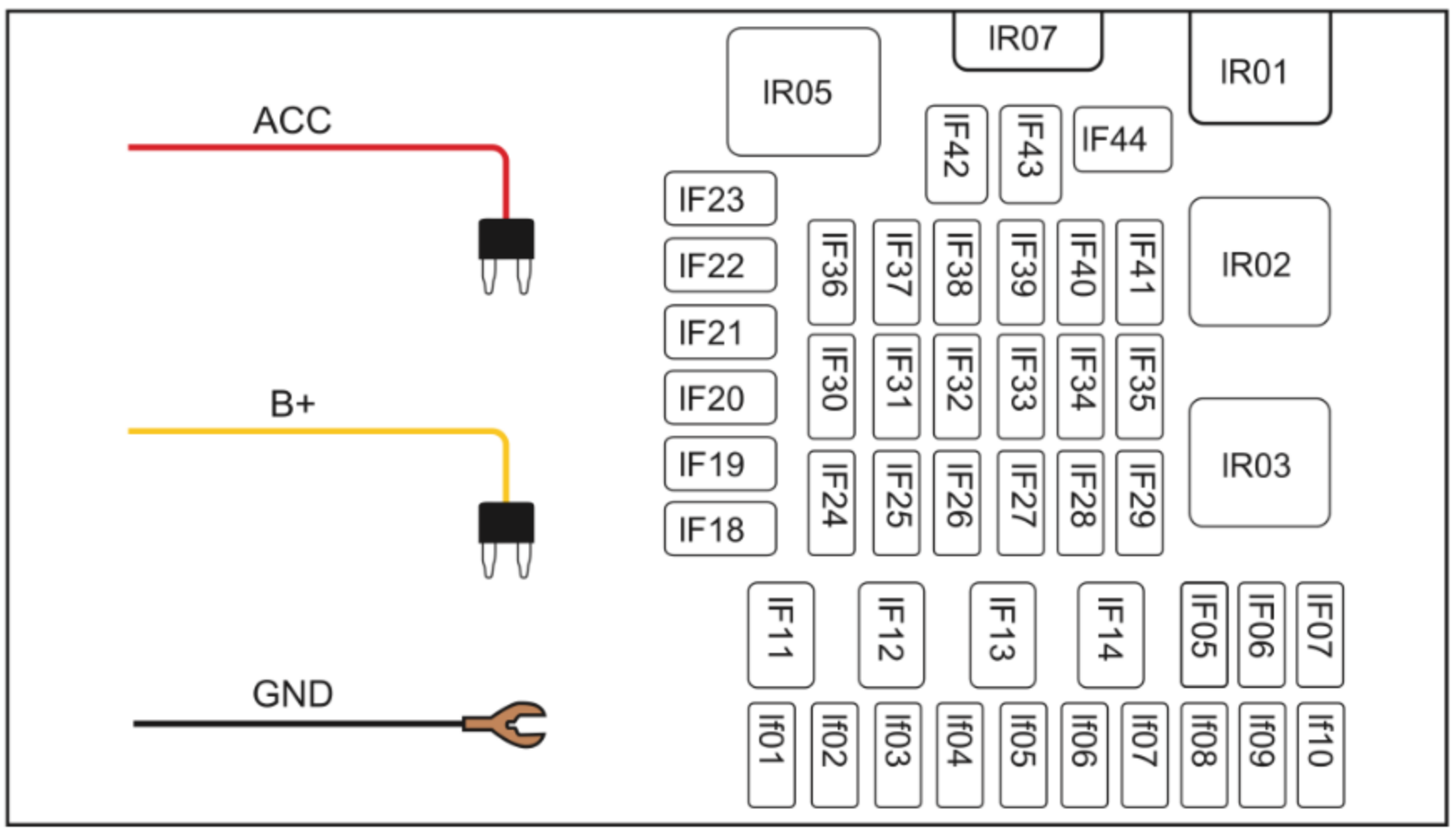

Installation Steps:

1.Remove the fuse box cover and connect the power supply (refer to the power connection diagram on the previous page).

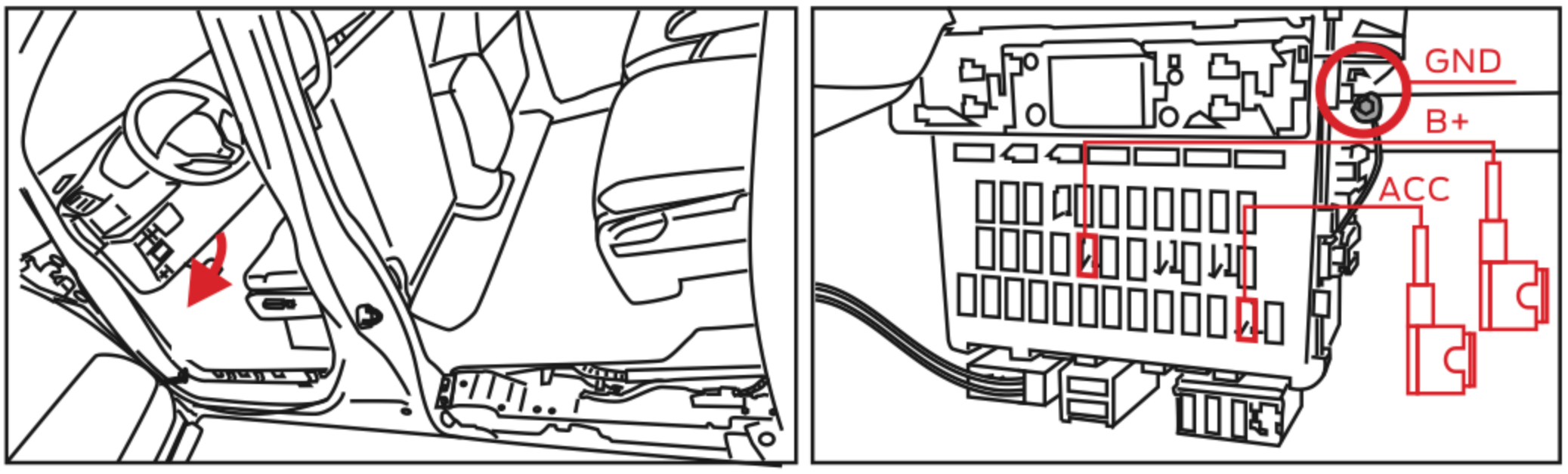

The fuse box location may vary depending on the vehicle model.

2.Route the power cable along the vehicle’s original wiring path at the bottom of the door frame.

3.Remove the headrest from the driver's seat and thread the cable through the side hole.

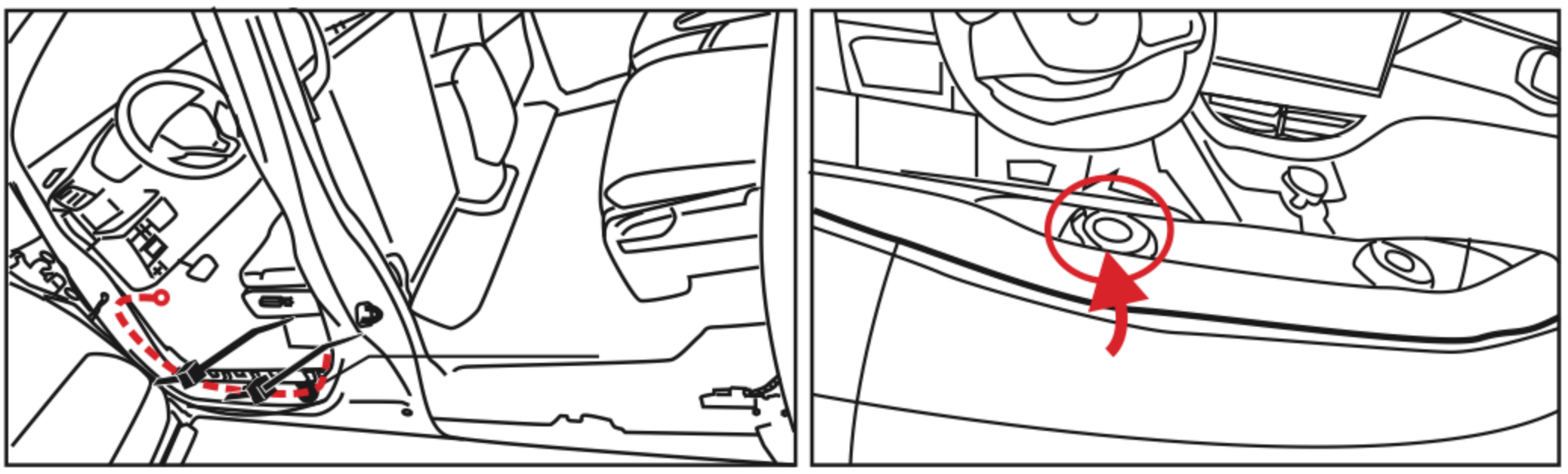

Note: Route the cables along the original vehicle wiring path and secure them with cable ties.

4.Use a wire puller to secure the display screen’s power cable and pull it through the hole on the left side of the headrest to the bottom of the driver's seat. Ensure proper cable routing to avoid exposure, and leave enough cable length for seat movement.

SINJET

Installation Steps:

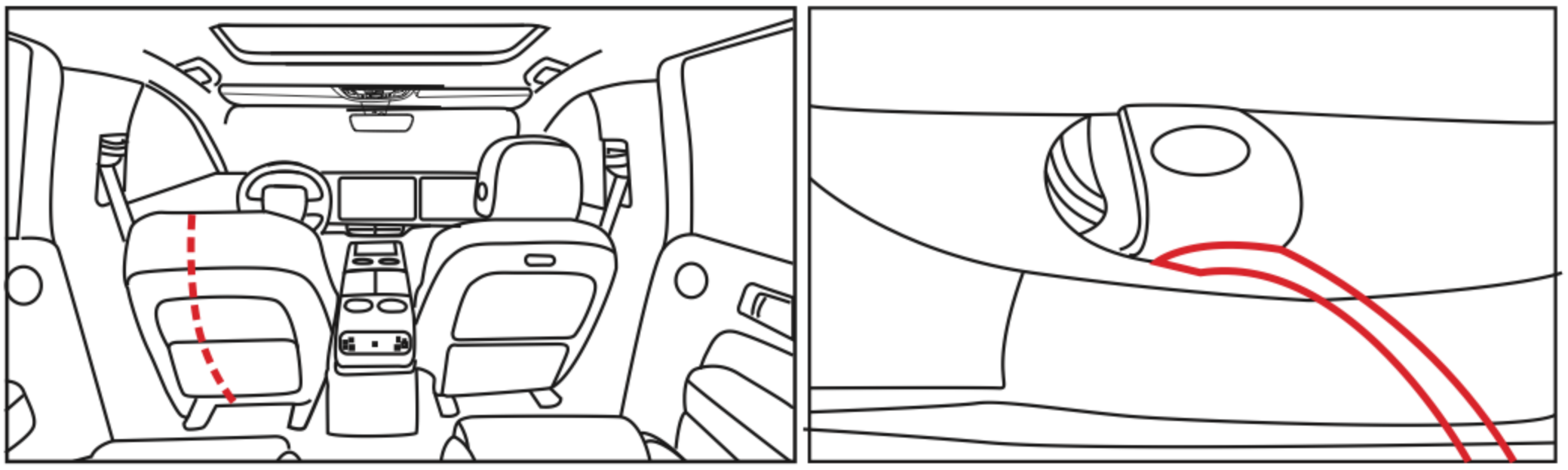

5.For the second display screen, repeat the same process to route the power cable to the bottom of the passenger seat. Ensure proper cable routing and leave enough cable length for seat movement.

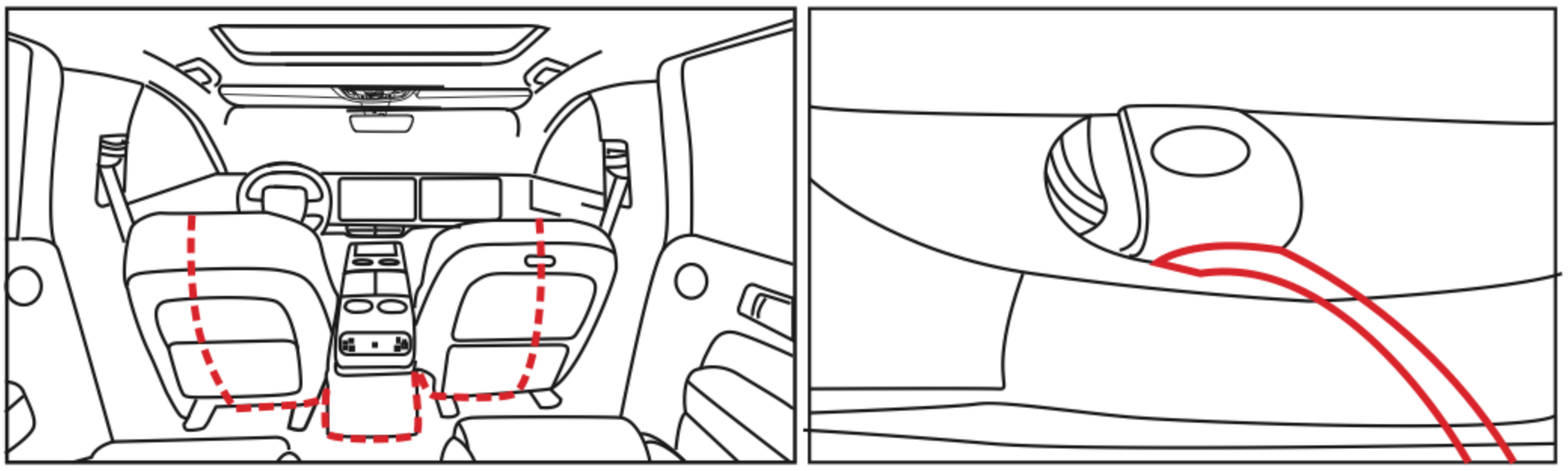

6.Once the wiring is complete, reattach the headrest to the seat. Then, secure the corresponding headrest mounting brackets on both sides of the headrest rods. Finally, align and attach the rear seat screen mounting brackets to the headrest support columns.

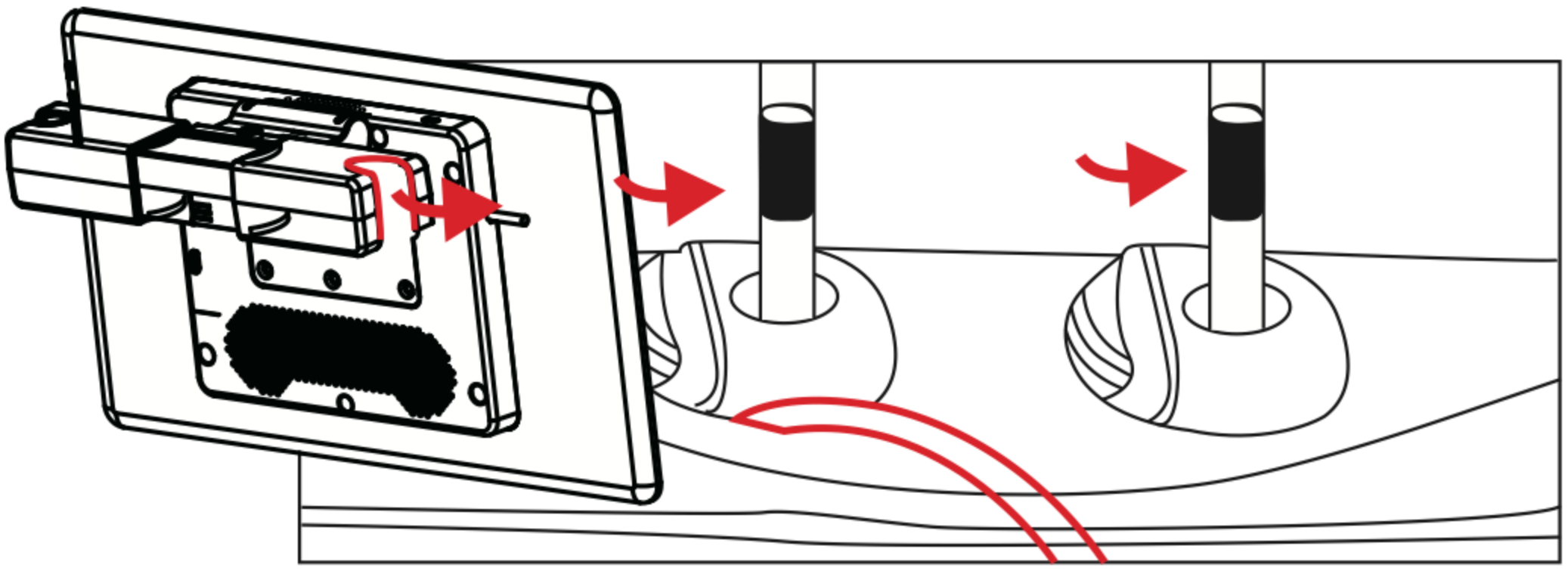

Installation Steps:

7.Installation complete, ready for functionality verification.

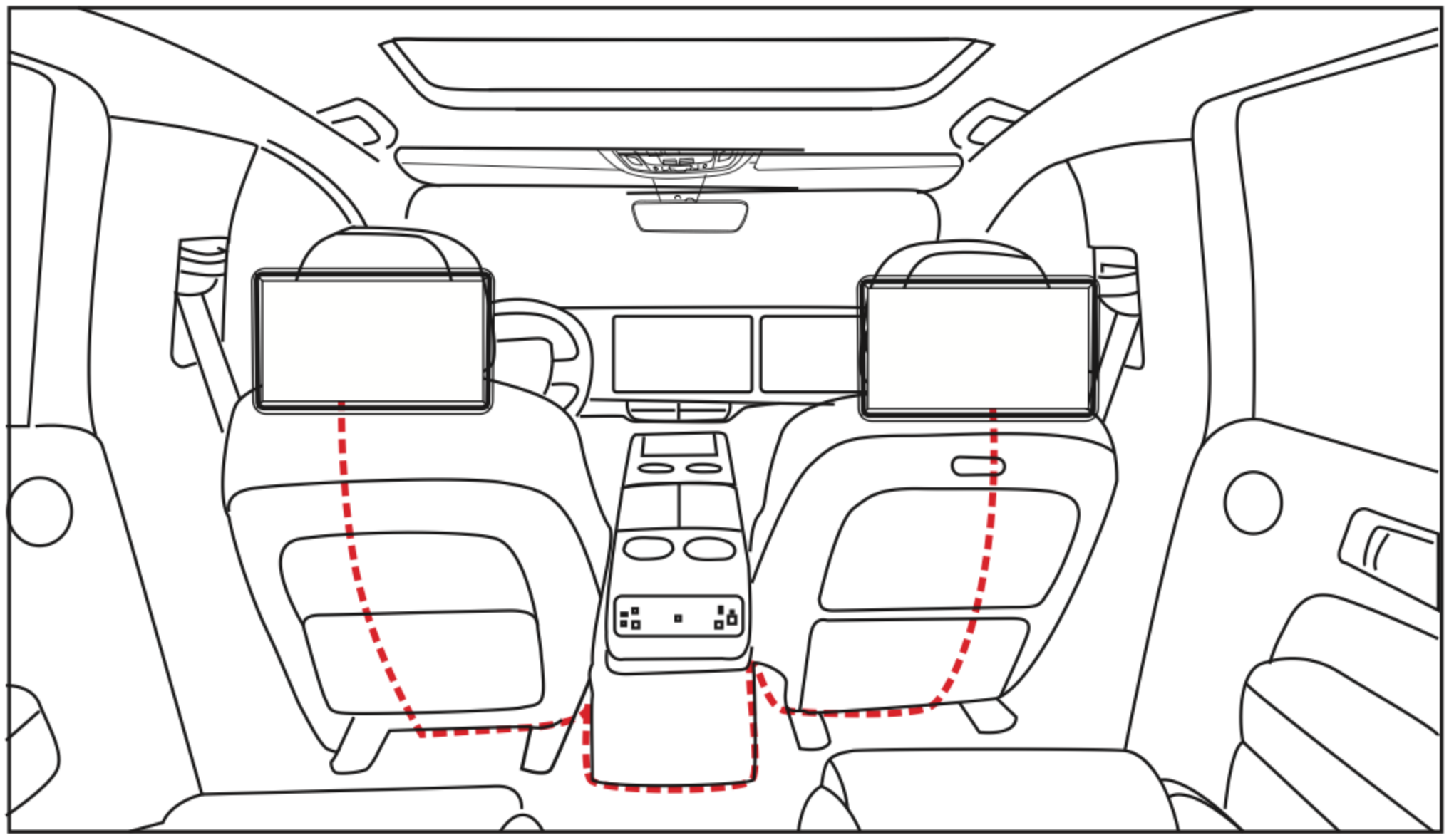

Function Verification:

1. After installation, perform a cross-check independently.
2. Before confirming the operation, ensure that the wiring is correctly installed.
3. Check if the vehicle display is functioning normally. If there is an issue, verify that the connectors are securely plugged in.
4. Check the operation of the vehicle's tailgate panel and tailgate switch. If there is a problem, ensure the connectors are securely connected.
5. Confirm that the original vehicle functions and the added streaming media system are working correctly before performing functional debugging.
6. Ensure that the negative terminal is properly tightened.

SINJET

User Instructions:

Safety Precautions:

To ensure your safety and the safety of others, please adhere to the following basic requirements:

1. Before installing this product, carefully read all related instructions. Failure to follow these instructions may void the warranty in case of damage.
2. To prevent short circuits, avoid allowing the device to come into contact with rainwater or other liquids.
3. Do not place or leave any metal objects (such as coins or metal tools) inside the device to prevent short circuits.
4. Use this device according to this manual. Do not open the device for repairs. If repairs are needed, please take it to a professional service station.
5. Do not insert objects into the device's ventilation slots or other openings.
6. Do not use sharp objects to touch, rub, or strike the screen.

Maintenance and Care:

To ensure the best user experience and longevity of the product, please follow these guidelines:

1. Do not expose the display screen to moisture, dust, steam, oil fumes, or other pollutants.
2. Do not leave the display screen exposed to direct sunlight for extended periods.
3. Take care to prevent the product from being subjected to heavy pressure or impacts.
4. Do not attempt to connect any power sources other than the vehicle's to this product, as it may damage the internal components.

Troubleshooting Guide:

Bluetooth Connection:

① Correctly Connect Bluetooth

- First, turn on the Bluetooth switch on the central control screen. Then, turn on the Bluetooth switch on the rear seat entertainment screen and search for the central control screen’s Bluetooth. Once matched, connect successfully.
- Switch the central control screen’s audio channel to the Bluetooth music channel or Bluetooth phone channel. The audio from the rear seat entertainment screen will then be output through the vehicle's speakers.

② Rear Seat Entertainment Screen Cannot Find Central Control Screen’s Bluetooth

- Confirm that the Bluetooth switch on the central control screen is turned on, and ensure that the Bluetooth function interface is open on the central control screen.

③ Bluetooth Won’t Automatically Connect to Other Bluetooth Devices

- If there is no connection to other Bluetooth devices, go to the central control screen's settings > System > Reset options > Reset WLAN, mobile data network, and Bluetooth settings. After resetting, pair and connect the Bluetooth again.

Troubleshooting Guide:

USB Recognition:

Cannot Recognize USB Songs/Video

- Confirm that the file manager has scanned the audio/video files on the USB. If the files are not recognized, try changing the USB drive and retrying.

Video Supported Formats: RM, FLV, MOV, AVI, MKV, TS, MP4, and other mainstream formats; supports 4K H265 decoding.
Audio Supported Formats: WAV, MP3, WMA, FLAC, APE, etc.

WiFi Connection:

Confirm if there are nearby available and functioning WiFi hotspots.
If no hotspots are found, perform a factory reset on the rear seat entertainment screen and try again.

Warranty and After-Sales Service:

Warranty Terms:

- The product includes a minimum warranty period of 1 year from the date of purchase.
- Registered users on the official website or those who purchase extended warranty services can extend the warranty period up to 3 years.

Exclusions from Warranty:

- Damage caused by improper installation, unauthorized repairs, or modifications.
- Issues resulting from accidents, misuse, or negligence.
- Damage due to exposure to moisture, extreme temperatures, or other environmental factors.

After-Sales Service:

- For technical support, repairs, or warranty claims, please contact our authorized service centers.
- Retain the purchase invoice and warranty card for verification during service requests.

Contact Information:

- **Email: operations@sinjet.cn**
- **Phone: 400-960-5198**
- **Address: Room 3, 13/F, New Commerce Centre,**
- **1-17 Sai Lau Kok Road, Tsuen Wan, Hong Kong.**

FCC warning statements:

This equipment has been tested and found to comply with the limits for a Class B digital device, pursuant to part 15 of the FCC Rules. These limits are designed to provide reasonable protection against harmful interference in a residential installation. This equipment generates, uses and can radiate radio frequency energy and, if not installed and used in accordance with the instructions, may cause harmful interference to radio communications. However, there is no guarantee that interference will not occur in a particular installation. If this equipment does cause harmful interference to radio or television reception, which can be determined by turning the equipment off and on, the user is encouraged to try to correct the interference by one or more of the following measures:

- Reorient or relocate the receiving antenna.
- Increase the separation between the equipment and receiver.
- Connect the equipment into an outlet on a circuit different from that to which the receiver is connected.
- Consult the dealer or an experienced radio/TV technician for help.

Caution: Any changes or modifications to this device not explicitly approved by manufacturer could void your authority to operate this equipment.

This device complies with part 15 of the FCC Rules. Operation is subject to the following two conditions: (1) This device may not cause harmful interference, and (2) this device must accept any interference received, including interference that may cause undesired operation.

The device has been evaluated to meet general RF exposure requirement This equipment complies with FCC radiation exposure limits set forth for an uncontrolled environment.
This equipment should be installed and operated with minimum distance 20cm between the radiator & your body.