(C) Radiated Emission Test-Up Frequency Above 1GHz

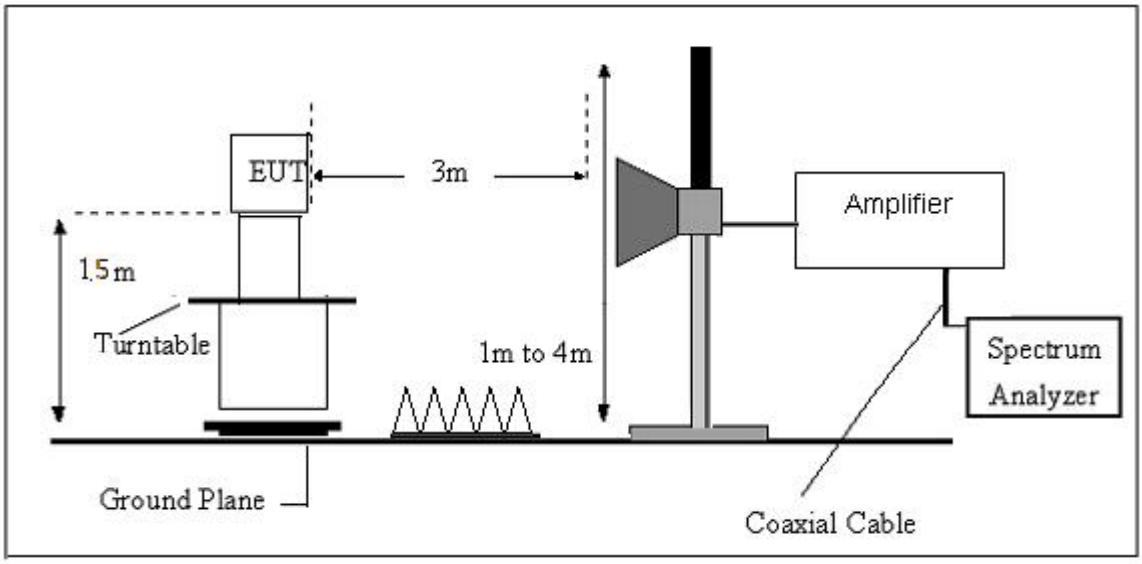

7.4. TEST RESULTS

(9KHz-30MHz)

Temperature:	22.7℃	Relative Humidity:	61%
Test Voltage:	DC 6V	Test Mode:	802.11b

Freq.	Reading	Limit	Margin	State	Test Result
(MHz)	(dBuV/m)	(dBuV/m)	(dB)	P/F	
--	--	--	--	--	PASS
--	--	--	--	--	PASS

Note:
The amplitude of spurious emissions which are attenuated by more than 20dB below the permissible value has no need to be reported.
Distance extrapolation factor =40 log (specific distance/test distance)(dB);
Limit line = specific limits (dBuv) + distance extrapolation factor.

(30MHz-1000MHz)

Temperature:	24.7℃	Relative Humidity:	61%
Test Voltage:	DC 6V	Phase:	Horizontal
Test Mode:	802.11b(worst)		

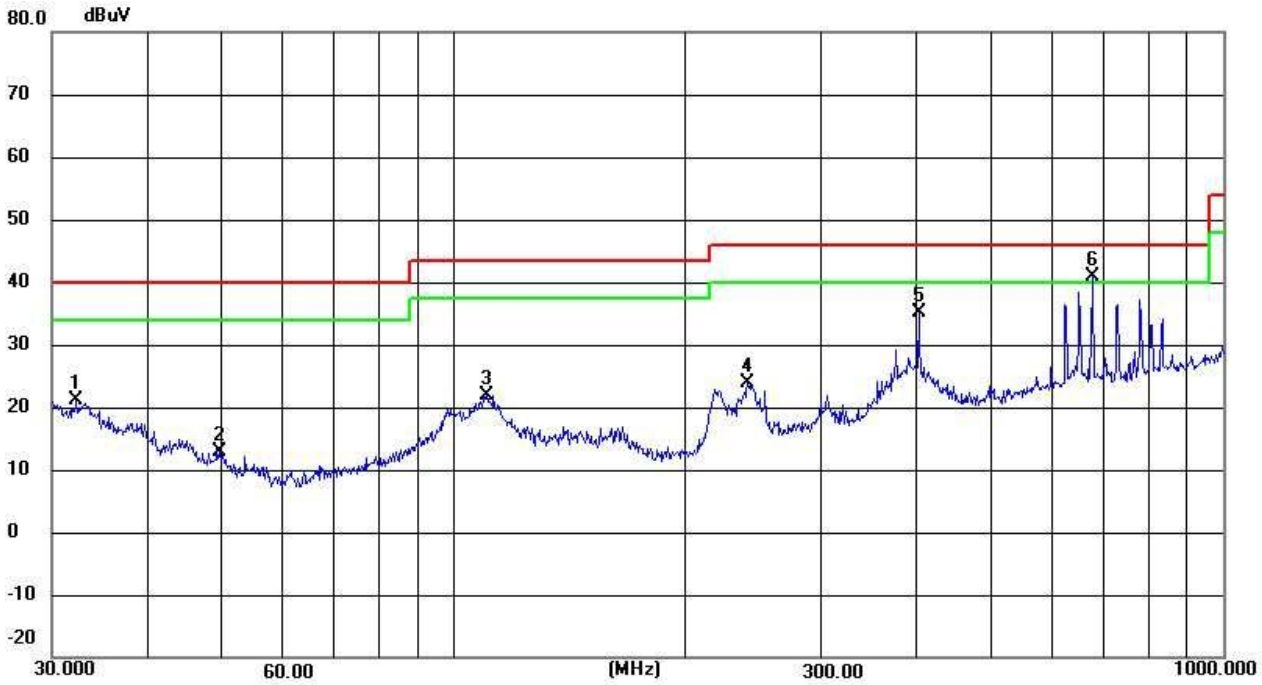

No.	Frequency (MHz)	Reading (dBuV)	Correct Factor(dB/m)	Result (dBuV/m)	Limit (dBuV/m)	Margin (dB)	Remark
1	32.2925	29.96	-8.88	21.08	40.00	-18.92	QP
2	49.5328	30.66	- 17.68	12.98	40.00	-27.02	QP
3	110.1816	54.22	-32.29	21.93	43.50	-21.57	QP
4	240.8304	56.04	-32. 16	23.88	46.00	-22.12	QP
5	401.8385	67.10	-32.00	35.10	46.00	-10.90	QP
6	675.2080	72.48	-31.67	40.81	46.00	-5.19	QP

› Note: 1. Margin = Result (Result =Reading + Factor)–Limit

2. If Peak Result complies with QP limit, QP Result is deemed to comply with QP limit.

3. Test setup: RBW: 120 kHz, VBW: 300 kHz, Sweep time: auto.

Temperature:	22.7℃	Relative Humidity:	61%
Test Voltage:	DC 6V	Phase:	Vertical
Test Mode:	802.11b(worst)		

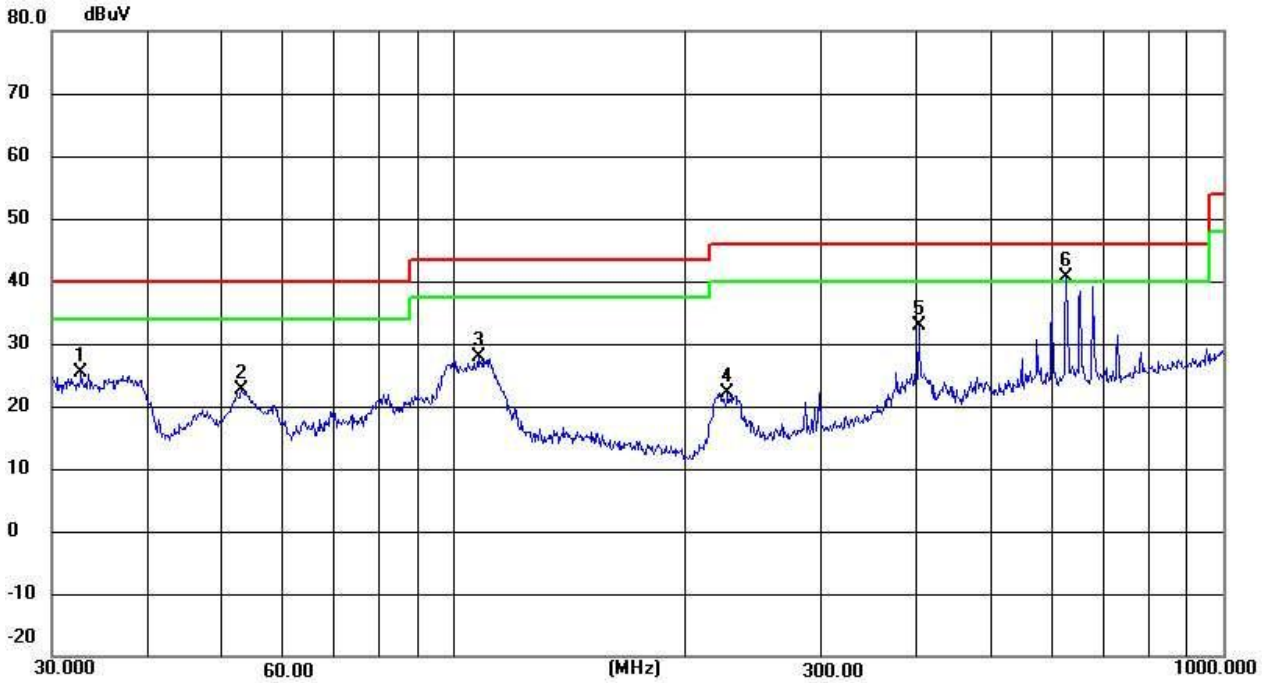

No.	Frequency (MHz)	Reading (dBuV)	Correct Factor(dB/m)	Result (dBuV/m)	Limit (dBuV/m)	Margin (dB)	Remark
1	32.7486	34.47	-9. 19	25.28	40.00	-14.72	QP
2	52.9453	41.68	- 18.99	22.69	40.00	- 17.31	QP
3	107.5101	60.22	-32.29	27.93	43.50	-15.57	QP
4	226.8936	54.28	-32. 17	22.11	46.00	-23.89	QP
5	401.8385	64.92	-32.00	32.92	46.00	-13.08	QP
6	625.0780	72.47	-31.73	40.74	46.00	-5.26	QP

Note: 1. Margin = Result (Result =Reading + Factor)–Limit

2. If Peak Result complies with QP limit, QP Result is deemed to comply with QP limit.

3. Test setup: RBW: 120 kHz, VBW: 300 kHz, Sweep time: auto.

(1GHz~25GHz) Restricted band and Spurious emission Requirements

Peak value:

Frequency (MHz)	Read Level (dBuV)	Antenna Factor (dB/m)	Cable Loss (dB)	Preamp Factor (dB)	Level (dBuV/m)	Limit Line (dBuV/m)	Over Limit (dB)	polarization
4824.00	37.46	31.28	8.62	24.17	53.19	74.00	-20.81	Vertical
7236.00	30.73	35.36	11.68	26.52	51.25	74.00	-22.75	Vertical
9648.00	31.12	37.44	14.16	25.44	57.28	74.00	-16.72	Vertical
12060.00	*					74.00		Vertical
14472.00	*					74.00		Vertical
16884.00	*					74.00		Vertical
4824.00	32.82	31.28	8.62	24.17	48.55	74.00	-25.45	Horizontal
7236.00	27.80	35.36	11.68	26.52	48.32	74.00	-25.68	Horizontal
9648.00	28.06	37.44	14.16	25.44	54.22	74.00	-19.78	Horizontal
12060.00	*					74.00		Horizontal
14472.00	*					74.00		Horizontal
16884.00	*					74.00		Horizontal

Average value:

Frequency (MHz)	Read Level (dBuV)	Antenna Factor (dB/m)	Cable Loss (dB)	Preamp Factor (dB)	Level (dBuV/m)	Limit Line (dBuV/m)	Over Limit (dB)	polarization
4824.00	27.79	31.28	8.62	24.17	43.52	54.00	-10.48	Vertical
7236.00	23.46	35.36	11.68	26.52	43.98	54.00	-10.02	Vertical
9648.00	18.64	37.44	14.16	25.44	44.80	54.00	-9.20	Vertical
12060.00	*					54.00		Vertical
14472.00	*					54.00		Vertical
16884.00	*					54.00		Vertical
4824.00	22.90	31.28	8.62	24.17	38.63	54.00	-15.37	Horizontal
7236.00	19.49	35.36	11.68	26.52	40.01	54.00	-13.99	Horizontal
9648.00	20.55	37.44	14.16	25.44	46.71	54.00	-7.29	Horizontal
12060.00	*					54.00		Horizontal
14472.00	*					54.00		Horizontal
16884.00	*					54.00		Horizontal

Remark:

1. *Final Level =Receiver Read level + Antenna Factor + Cable Loss – Preamplifier Factor*
2. *"*", means this data is the too weak instrument of signal is unable to test.*

802.11b(Worst)-Middle

Peak value:

Frequency (MHz)	Read Level (dBuV)	Antenna Factor (dB/m)	Cable Loss (dB)	Preamp Factor (dB)	Level (dBuV/m)	Limit Line (dBuV/m)	Over Limit (dB)	polarization
4874.00	37.69	32.02	8.66	24.12	54.25	74.00	-19.75	Vertical
7311.00	31.00	36.64	11.71	26.71	52.64	74.00	-21.36	Vertical
9748.00	30.36	38.54	14.25	25.38	57.77	74.00	-16.23	Vertical
12185.00	*					74.00		Vertical
14622.00	*					74.00		Vertical
17059.00	*					74.00		Vertical
4874.00	34.14	32.02	8.66	24.12	50.70	74.00	-23.30	Horizontal
7311.00	27.73	36.64	11.71	26.71	49.37	74.00	-24.63	Horizontal
9748.00	28.45	38.54	14.25	25.38	55.86	74.00	-18.14	Horizontal
12185.00	*					74.00		Horizontal
14622.00	*					74.00		Horizontal
17059.00	*					74.00		Horizontal

Average value:

Frequency (MHz)	Read Level (dBuV)	Antenna Factor (dB/m)	Cable Loss (dB)	Preamp Factor (dB)	Level (dBuV/m)	Limit Line (dBuV/m)	Over Limit (dB)	polarization
4874.00	28.05	32.02	8.66	24.12	44.61	54.00	-9.39	Vertical
7311.00	23.43	36.64	11.71	26.71	45.07	54.00	-8.93	Vertical
9748.00	17.78	38.54	14.25	25.38	45.19	54.00	-8.81	Vertical
12185.00	*					54.00		Vertical
14622.00	*					54.00		Vertical
17059.00	*					54.00		Vertical
4874.00	24.33	32.02	8.66	24.12	40.89	54.00	-13.11	Horizontal
7311.00	19.40	36.64	11.71	26.71	41.04	54.00	-12.96	Horizontal
9748.00	19.92	38.54	14.25	25.38	47.33	54.00	-6.67	Horizontal
12185.00	*					54.00		Horizontal
14622.00	*					54.00		Horizontal
17059.00	*					54.00		Horizontal

Remark:

1. *Final Level =Receiver Read level + Antenna Factor + Cable Loss – Preamplifier Factor*
2. *"*", means this data is the too weak instrument of signal is unable to test.*

802.11b(Worst)-High

Peak value:

Frequency (MHz)	Read Level (dBuV)	Antenna Factor (dB/m)	Cable Loss (dB)	Preamp Factor (dB)	Level (dBuV/m)	Limit Line (dBuV/m)	Over Limit (dB)	polarization
4924.00	38.23	32.14	8.70	24.05	55.02	74.00	-18.98	Vertical
7386.00	30.82	36.75	11.76	26.90	52.43	74.00	-21.57	Vertical
9848.00	30.04	38.79	14.31	25.30	57.84	74.00	-16.16	Vertical
12310.00	*					74.00		Vertical
14772.00	*					74.00		Vertical
17234.00	*					74.00		Vertical
4924.00	33.70	32.14	8.70	24.05	50.49	74.00	-23.51	Horizontal
7386.00	28.07	36.75	11.76	26.90	49.68	74.00	-24.32	Horizontal
9848.00	25.67	38.79	14.31	25.30	53.47	74.00	-20.53	Horizontal
12310.00	*					74.00		Horizontal
14772.00	*					74.00		Horizontal
17234.00	*					74.00		Horizontal

Average value:

Frequency (MHz)	Read Level (dBuV)	Antenna Factor (dB/m)	Cable Loss (dB)	Preamp Factor (dB)	Level (dBuV/m)	Limit Line (dBuV/m)	Over Limit (dB)	polarization
4924.00	27.59	32.14	8.70	24.05	44.38	54.00	-9.62	Vertical
7386.00	23.05	36.75	11.76	26.90	44.66	54.00	-9.34	Vertical
9848.00	16.36	38.79	14.31	25.30	44.16	54.00	-9.84	Vertical
12310.00	*					54.00		Vertical
14772.00	*					54.00		Vertical
17234.00	*					54.00		Vertical
4924.00	23.09	32.14	8.70	24.05	39.88	54.00	-14.12	Horizontal
7386.00	19.58	36.75	11.76	26.90	41.19	54.00	-12.81	Horizontal
9848.00	17.14	38.79	14.31	25.30	44.94	54.00	-9.06	Horizontal
12310.00	*					54.00		Horizontal
14772.00	*					54.00		Horizontal
17234.00	*					54.00		Horizontal

Remark:

1. *Final Level =Receiver Read level + Antenna Factor + Cable Loss – Preamplifier Factor*
2. *"*", means this data is the too weak instrument of signal is unable to test.*

3. Notes：emissions are attenuated 20dB below the limits, so it does not record.
4. The amplitude of spurious emissions which are attenuated more than 20 dB below the limits are not reported.

802.11 b low CH

Peak value:

Frequency (MHz)	Read Level (dBuV)	Antenna Factor (dB/m)	Cable Loss (dB)	Preamp Factor (dB)	Level (dBuV/m)	Limit Line (dBuV/m)	Over Limit (dB)	Polarization
2390.00	48.89	27.59	5.38	34.01	47.85	74.00	-26.15	Horizontal
2400.00	54.73	27.58	5.39	34.01	53.69	74.00	-20.31	Horizontal
2390.00	47.76	27.59	5.38	34.01	46.72	74.00	-27.28	Vertical
2400.00	51.59	27.58	5.39	34.01	50.55	74.00	-23.45	Vertical

Average value:

Frequency (MHz)	Read Level (dBuV)	Antenna Factor (dB/m)	Cable Loss (dB)	Preamp Factor (dB)	Level (dBuV/m)	Limit Line (dBuV/m)	Over Limit (dB)	Polarization
2390.00	37.90	27.59	5.38	34.01	36.86	54.00	-17.14	Horizontal
2400.00	43.82	27.58	5.39	34.01	42.78	54.00	-11.22	Horizontal
2390.00	36.12	27.59	5.38	34.01	35.08	54.00	-18.92	Vertical
2400.00	40.68	27.58	5.39	34.01	39.64	54.00	-14.36	Vertical

802.11 b High CH

Peak value:

Frequency (MHz)	Read Level (dBuV)	Antenna Factor (dB/m)	Cable Loss (dB)	Preamp Factor (dB)	Level (dBuV/m)	Limit Line (dBuV/m)	Over Limit (dB)	Polarization
2483.50	48.23	27.53	5.47	33.92	47.31	74.00	-26.69	Horizontal
2500.00	45.87	27.55	5.49	29.93	48.98	74.00	-25.02	Horizontal
2483.50	47.68	27.53	5.47	33.92	46.76	74.00	-27.24	Vertical
2500.00	44.05	27.55	5.49	29.93	47.16	74.00	-26.84	Vertical

Average value:

Frequency (MHz)	Read Level (dBuV)	Antenna Factor (dB/m)	Cable Loss (dB)	Preamp Factor (dB)	Level (dBuV/m)	Limit Line (dBuV/m)	Over Limit (dB)	Polarization
2483.50	37.14	27.53	5.47	33.92	36.22	54.00	-17.78	Horizontal
2500.00	34.14	27.55	5.49	29.93	37.25	54.00	-16.75	Horizontal
2483.50	35.29	27.53	5.47	33.92	34.37	54.00	-19.63	Vertical
2500.00	32.40	27.55	5.49	29.93	35.51	54.00	-18.49	Vertical

3.The amplitude of spurious emissions which are attenuated more than 20 dB below the limits are not reported.

802.11 g Low CH

Peak value:

Frequency (MHz)	Read Level (dBuV)	Antenna Factor (dB/m)	Cable Loss (dB)	Preamp Factor (dB)	Level (dBuV/m)	Limit Line (dBuV/m)	Over Limit (dB)	Polarization
2390.00	50.21	27.59	5.38	34.01	49.17	74.00	-24.83	Horizontal
2400.00	58.74	27.58	5.39	34.01	57.70	74.00	-16.30	Horizontal
2390.00	51.79	27.59	5.38	34.01	50.75	74.00	-23.25	Vertical
2400.00	60.15	27.58	5.39	34.01	59.11	74.00	-14.89	Vertical

Average value:

Frequency (MHz)	Read Level (dBuV)	Antenna Factor (dB/m)	Cable Loss (dB)	Preamp Factor (dB)	Level (dBuV/m)	Limit Line (dBuV/m)	Over Limit (dB)	Polarization
2390.00	37.39	27.59	5.38	34.01	36.35	54.00	-17.65	Horizontal
2400.00	45.53	27.58	5.39	34.01	44.49	54.00	-9.51	Horizontal
2390.00	39.09	27.59	5.38	34.01	38.05	54.00	-15.95	Vertical
2400.00	46.54	27.58	5.39	34.01	45.50	54.00	-8.50	Vertical

802.11 g High CH

Peak value:

Frequency (MHz)	Read Level (dBuV)	Antenna Factor (dB/m)	Cable Loss (dB)	Preamp Factor (dB)	Level (dBuV/m)	Limit Line (dBuV/m)	Over Limit (dB)	Polarization
2483.50	50.25	27.53	5.47	33.92	49.33	74.00	-24.67	Horizontal
2500.00	46.54	27.55	5.49	29.93	49.65	74.00	-24.35	Horizontal
2483.50	52.22	27.53	5.47	33.92	51.30	74.00	-22.70	Vertical
2500.00	48.78	27.55	5.49	29.93	51.89	74.00	-22.11	Vertical

Average value:

Frequency (MHz)	Read Level (dBuV)	Antenna Factor (dB/m)	Cable Loss (dB)	Preamp Factor (dB)	Level (dBuV/m)	Limit Line (dBuV/m)	Over Limit (dB)	Polarization
2483.50	37.53	27.53	5.47	33.92	36.61	54.00	-17.39	Horizontal
2500.00	33.91	27.55	5.49	29.93	37.02	54.00	-16.98	Horizontal
2483.50	39.35	27.53	5.47	33.92	38.43	54.00	-15.57	Vertical
2500.00	35.73	27.55	5.49	29.93	38.84	54.00	-15.16	Vertical

Remark:

1. *Final Level =Receiver Read level + Antenna Factor + Cable Loss – Preamplifier Factor*
2. *The emission levels of other frequencies are very lower than the limit and not show in test report.*

3.The amplitude of spurious emissions which are attenuated more than 20 dB below the limits are not reported.

802.11 N 20 Low CH

Peak value:

Frequency (MHz)	Read Level (dBuV)	Antenna Factor (dB/m)	Cable Loss (dB)	Preamp Factor (dB)	Level (dBuV/m)	Limit Line (dBuV/m)	Over Limit (dB)	Polarization
2390.00	50.18	27.59	5.38	34.01	49.14	74.00	-24.86	Horizontal
2400.00	58.69	27.58	5.39	34.01	57.65	74.00	-16.35	Horizontal
2390.00	51.75	27.59	5.38	34.01	50.71	74.00	-23.29	Vertical
2400.00	60.09	27.58	5.39	34.01	59.05	74.00	-14.95	Vertical

Average value:

Frequency (MHz)	Read Level (dBuV)	Antenna Factor (dB/m)	Cable Loss (dB)	Preamp Factor (dB)	Level (dBuV/m)	Limit Line (dBuV/m)	Over Limit (dB)	Polarization
2390.00	37.36	27.59	5.38	34.01	36.32	54.00	-17.68	Horizontal
2400.00	45.50	27.58	5.39	34.01	44.46	54.00	-9.54	Horizontal
2390.00	39.06	27.59	5.38	34.01	38.02	54.00	-15.98	Vertical
2400.00	46.51	27.58	5.39	34.01	45.47	54.00	-8.53	Vertical

802.11 N 20 High CH

Peak value:

Frequency (MHz)	Read Level (dBuV)	Antenna Factor (dB/m)	Cable Loss (dB)	Preamp Factor (dB)	Level (dBuV/m)	Limit Line (dBuV/m)	Over Limit (dB)	Polarization
2483.50	50.20	27.53	5.47	33.92	49.28	74.00	-24.72	Horizontal
2500.00	46.50	27.55	5.49	29.93	49.61	74.00	-24.39	Horizontal
2483.50	52.16	27.53	5.47	33.92	51.24	74.00	-22.76	Vertical
2500.00	48.73	27.55	5.49	29.93	51.84	74.00	-22.16	Vertical

Average value:

Frequency (MHz)	Read Level (dBuV)	Antenna Factor (dB/m)	Cable Loss (dB)	Preamp Factor (dB)	Level (dBuV/m)	Limit Line (dBuV/m)	Over Limit (dB)	Polarization
2483.50	37.50	27.53	5.47	33.92	36.58	54.00	-17.42	Horizontal
2500.00	33.89	27.55	5.49	29.93	37.00	54.00	-17.00	Horizontal
2483.50	39.32	27.53	5.47	33.92	38.40	54.00	-15.60	Vertical
2500.00	35.71	27.55	5.49	29.93	38.82	54.00	-15.18	Vertical

Remark:

1. *Final Level =Receiver Read level + Antenna Factor + Cable Loss – Preamplifier Factor*
2. *The emission levels of other frequencies are very lower than the limit and not show in test report.*

8 CONDUCTED EMISSION TEST

8.1.1 POWER LINE CONDUCTED EMISSION LIMITS

Operating frequency band. In case the emission fall within the restricted band specified on Part 207(a) limit in the table below has to be followed.

FREQUENCY (MHz)	Conducted Emissionlimit (dBuV)	
	Quasi-peak	Average
0.15 -0.5	66 - 56 *	56 - 46 *
0.50 -5.0	56.00	46.00
5.0 -30.0	60.00	50.00

Note:

(1) The tighter limit applies at the band edges.

(2) The limit of " * " marked band means the limitation decreases linearly with the logarithm of the frequency in the range.

The following table is the setting of the receiver

Receiver Parameters	**Setting**
Attenuation	10 dB
Start Frequency	0.15 MHz
Stop Frequency	30 MHz
IF Bandwidth	9 kHz

8.1.2 TEST PROCEDURE

a. The EUT was 0.8 meters from the horizontal ground plane and 0.4 meters from the vertical ground plane with EUT being connected to the power mains through a line impedance stabilization network (LISN). All other support equipments powered from additional LISN(s). The LISN provide 50 Ohm/ 50uH of coupling impedance for the measuring instrument.
b. Interconnecting cables that hang closer than 40 cm to the ground plane shall be folded back and forth in the center forming a bundle 30 to 40 cm long.
c. I/O cables that are not connected to a peripheral shall be bundled in the center. The end of the cable may be terminated, if required, using the correct terminating impedance. The overall length shall not exceed 1 m.
d. LISN at least 80 cm from nearest part of EUT chassis.
e. For the actual test configuration, please refer to the related Item –EUT Test Photos.

8.1.3 TEST SETUP

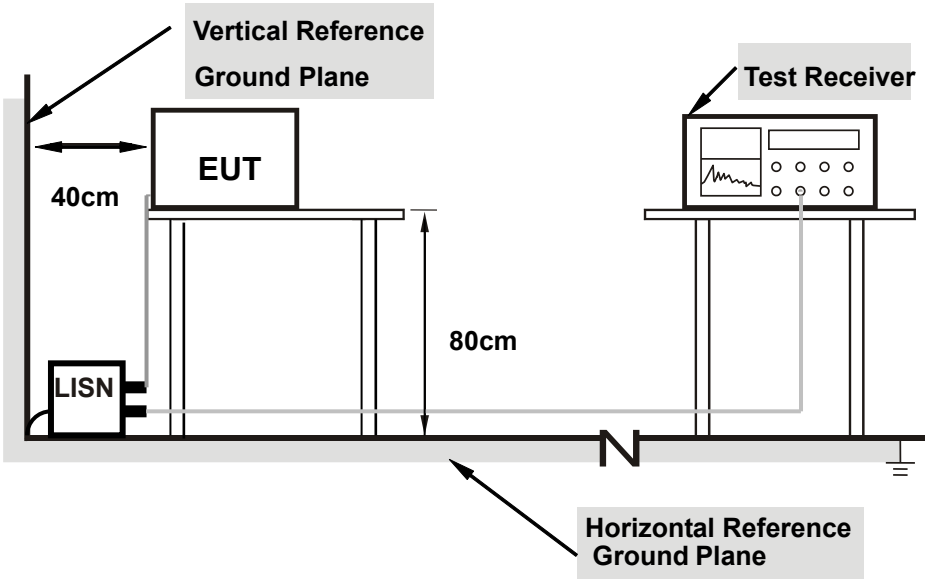

Note: 1.Support units were connected to second LISN.

2.Both of LISNs (AMN) are 80 cm from EUT and at least 80 from other units and other metal planes

8.1.4 TEST RESULT

Temperature:	22.1 ℃	Relative Humidity:	56%
Test Voltage:	AC 120V/60Hz	Phase:	L
Test Mode:	Mode 1(worst)		

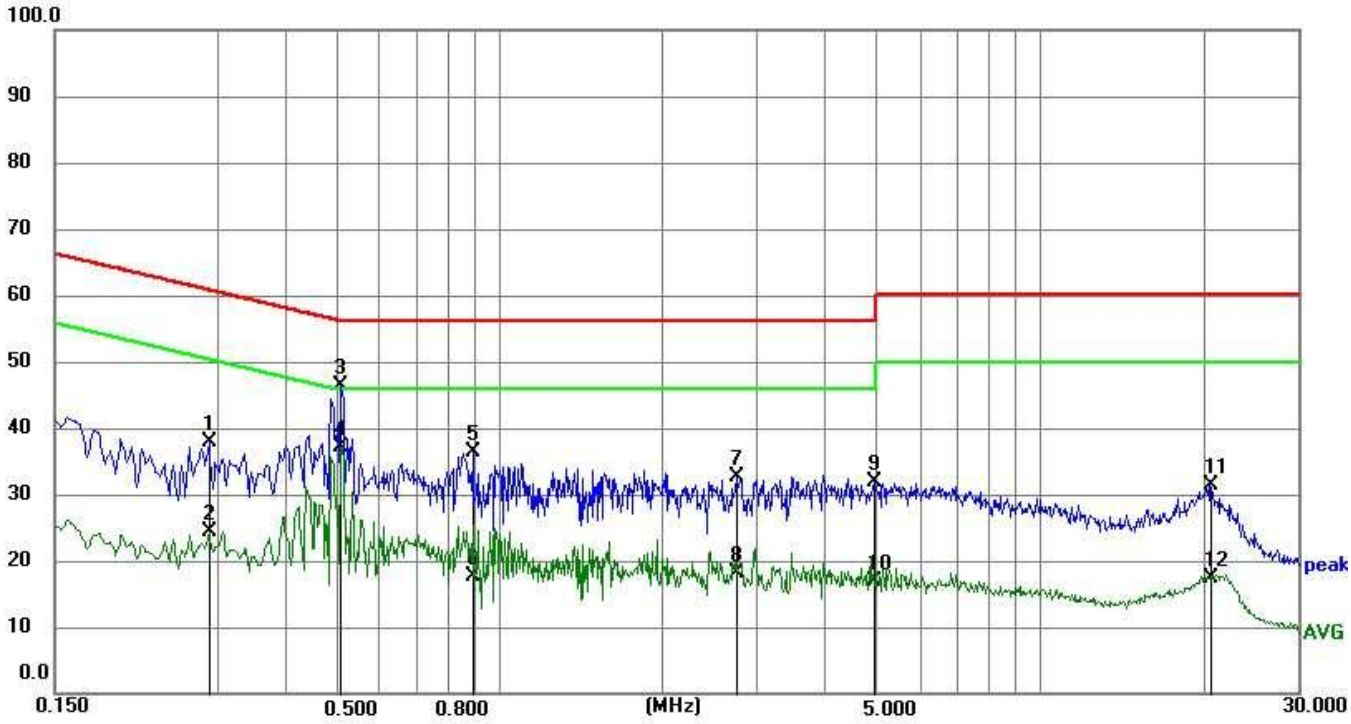

No.	Frequency (MHz)	Reading (dBuV)	Correct Factor(dB/m)	Result (dBuV/m)	Limit (dBuV/m)	Margin (dB)	Remark
1	0.2895	27.86	10.03	37.89	60.54	22.65	QP
2	0.2895	14.33	10.03	24.36	50.54	26. 18	AVG
3	0.5100	36.39	10.02	46.41	56.00	9.59	QP
4	0.5100	27.21	10.02	37.23	46.00	8.77	AVG
5	0.8925	26.36	9.99	36.35	56.00	19.65	QP
6	0.8925	7.72	9.99	17.71	46.00	28.29	AVG
7	2.7420	22.62	9.95	32.57	56.00	23.43	QP
8	2.7420	8. 17	9.95	18. 12	46.00	27.88	AVG
9	4.9335	21.93	9.88	31.81	56.00	24. 19	QP
10	4.9335	6.97	9.88	16.85	46.00	29. 15	AVG
11	20.6970	21.54	9.94	31.48	60.00	28.52	QP
12	20.6970	7.51	9.94	17.45	50.00	32.55	AVG

Temperature:	22.1 ℃	Relative Humidity:	56%
Test Voltage:	AC 120V/60Hz	Phase:	N
Test Mode:	Mode 1(worst)		

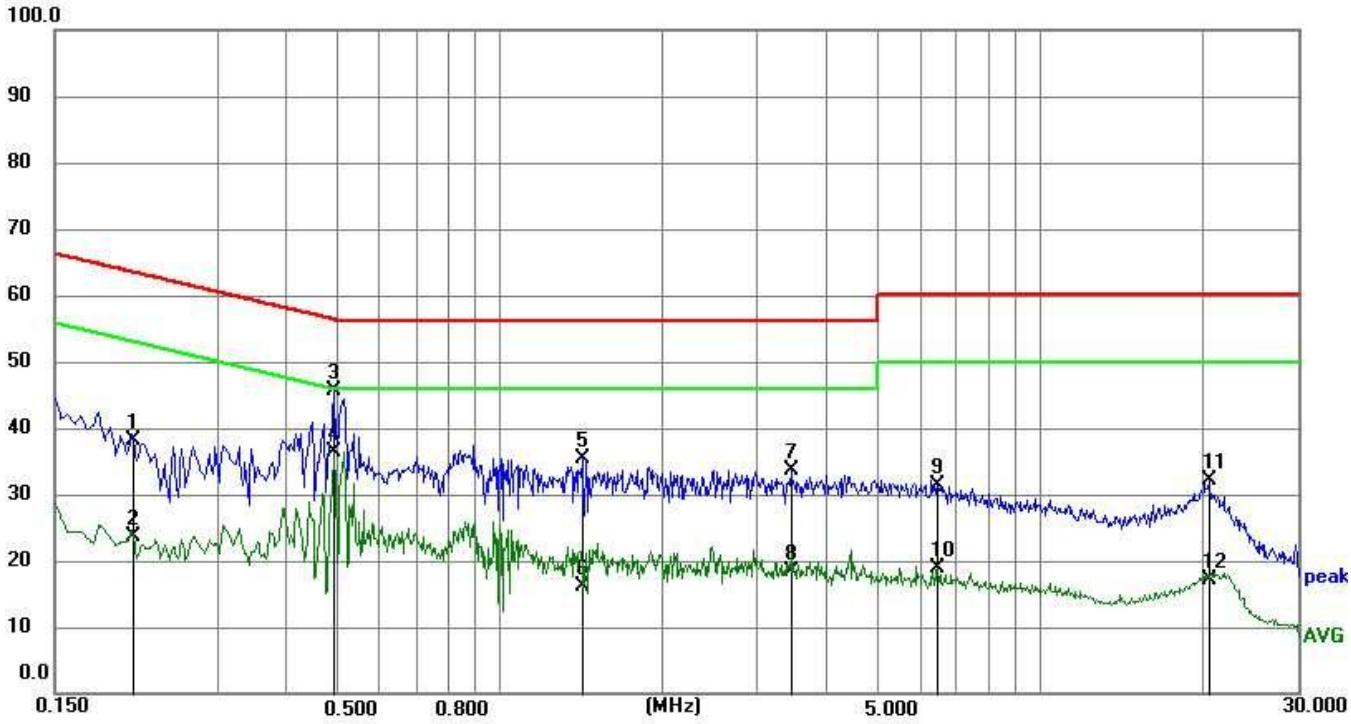

No.	Frequency (MHz)	Reading (dBuV)	Correct Factor(dB/m)	Result (dBuV/m)	Limit (dBuV/m)	Margin (dB)	Remark
1	0.2094	28.05	10.05	38. 10	63.23	25. 13	QP
2	0.2094	13.70	10.05	23.75	53.23	29.48	AVG
3	0.4920	35.56	10.01	45.57	56. 13	10.56	QP
4	0.4920	26.30	10.01	36.31	46. 13	9.82	AVG
5	1.4235	25.33	9.98	35.31	56.00	20.69	QP
6	1.4235	6. 13	9.98	16. 11	46.00	29.89	AVG
7	3.4710	23.69	9.93	33.62	56.00	22.38	QP
8	3.4710	8.47	9.93	18.40	46.00	27.60	AVG
9	6.4545	21.59	9.84	31.43	60.00	28.57	QP
10	6.4545	8.96	9.84	18.80	50.00	31.20	AVG
11	20.5395	22.21	10.00	32.21	60.00	27.79	QP
12	20.5395	7.24	10.00	17.24	50.00	32.76	AVG

9. ANTENNA REQUIREMENT

9.1 STANDARD REQUIREMENT

For intentional device, according to FCC 47 CFR Section 15.203, an intentional radiator shall be designed to ensure that no antenna other than that furnished by the responsible party shall be used with the device. And according to FCC 47 CFR Section 15.247 (b), if transmitting antennas of directional gain greater than 6dBi are used, the power shall be reduced by the amount in dB that the directional gain of the antenna exceeds 6dBi.

9.2 RESULT

The antennas used for this product are PCB antenna and other than that furnished by the responsible party shall be used with the device, the maximum peak gain of the transmit antenna is 2.54dBi.

※※※※※END OF THE REPORT※※※※※