Smart Projector

※Quick Installation Guide※

Attention

Please read this manual carefully before use and keep it for future reference.

1. The projector is non dustproof or waterproof.
2. In order to reduce the risk of fire and electric shock, do not expose the projector to rain and fog.
3. Please use the original power adapter. The projector should work under specified rated power supply.
4. When projector is working, please do not look directly into the lens, the strong light will flash your eyes and cause slight pain. Children should use the projector under the supervision of adults.
5. Do not cover the vents of projector. Heating will reduce the life of projector and cause danger.
6. Regularly clean projector vents, or dust may cause cooling malfunction.
7. Do not use the projector in greasy, damp, dusty or smoky environment. Oil or chemicals will cause malfunction.
8. Please handle with care during daily use.
9. Please cut off the power if the projector is out of use for long time.
10. Non-professionals are forbidden to disassemble the projector for testing and maintenance.

Structure Description

This manual is for reference only. It is subject to change without prior notice. Hotack reserves the right of final interpretation.

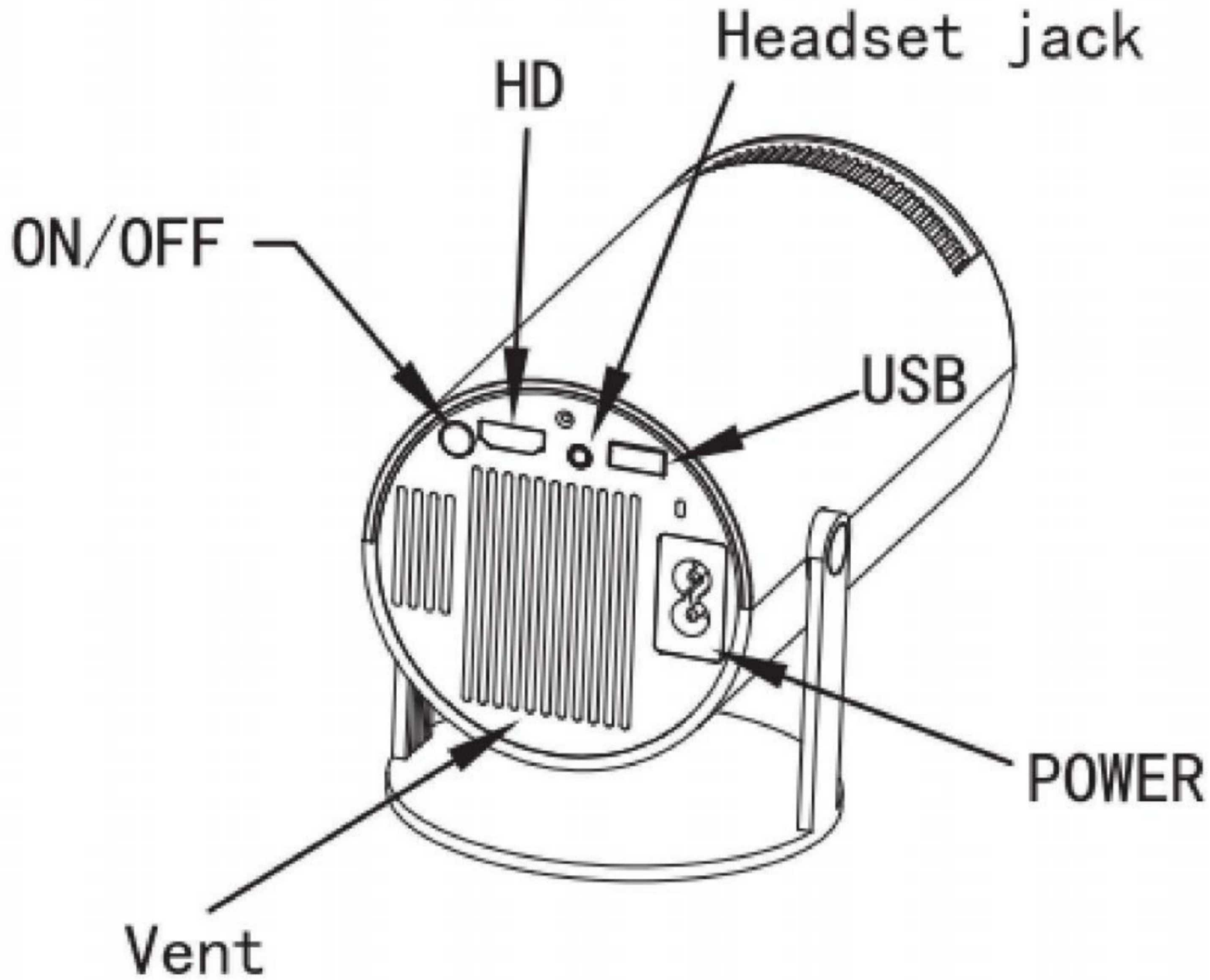

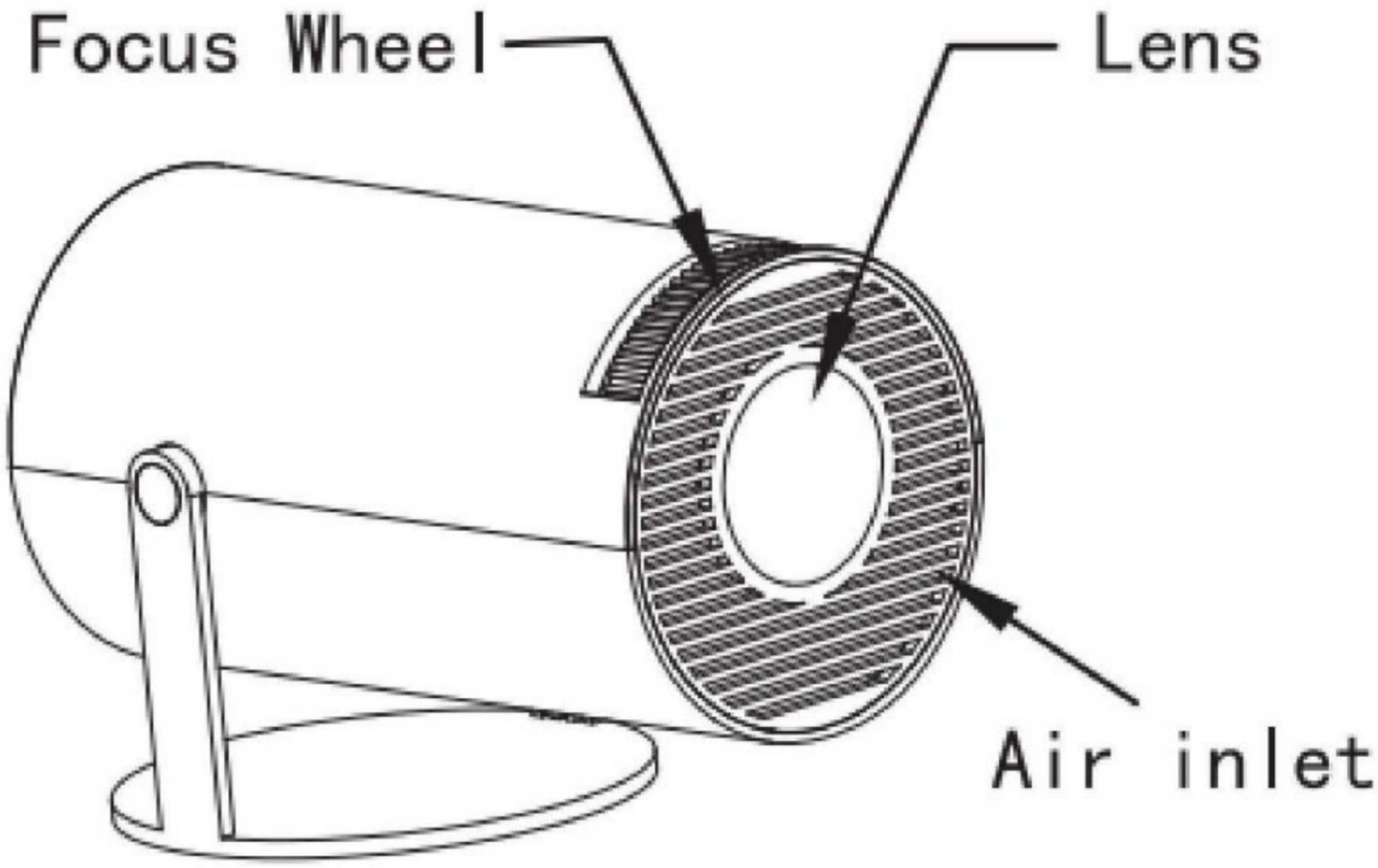
Focus Wheel
Lens
Air inlet

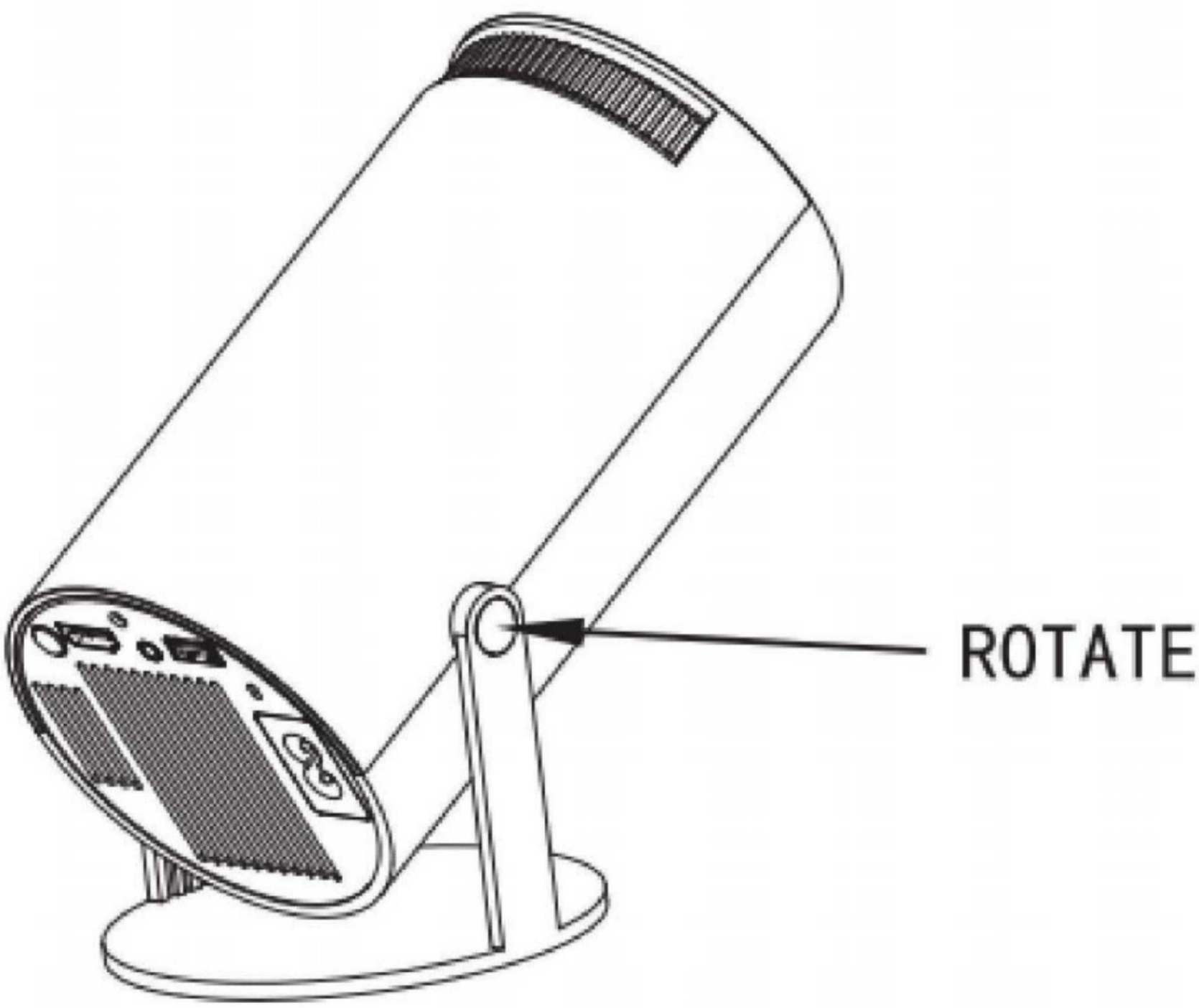
ROTATE

Remote Component and Functions

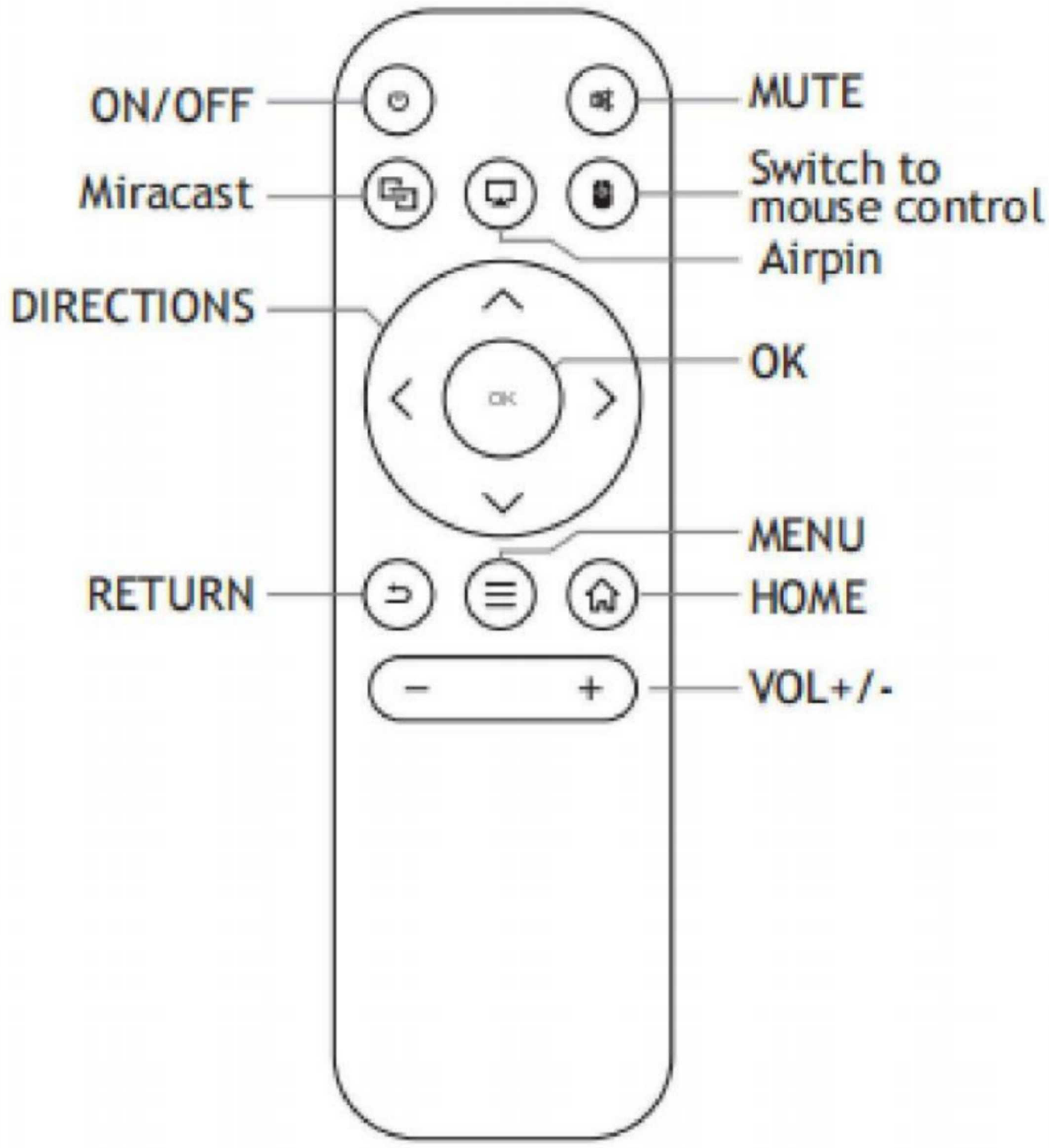

Infrared light remote control

Power ON/OFF

Long press Power button on projector for 3 seconds.

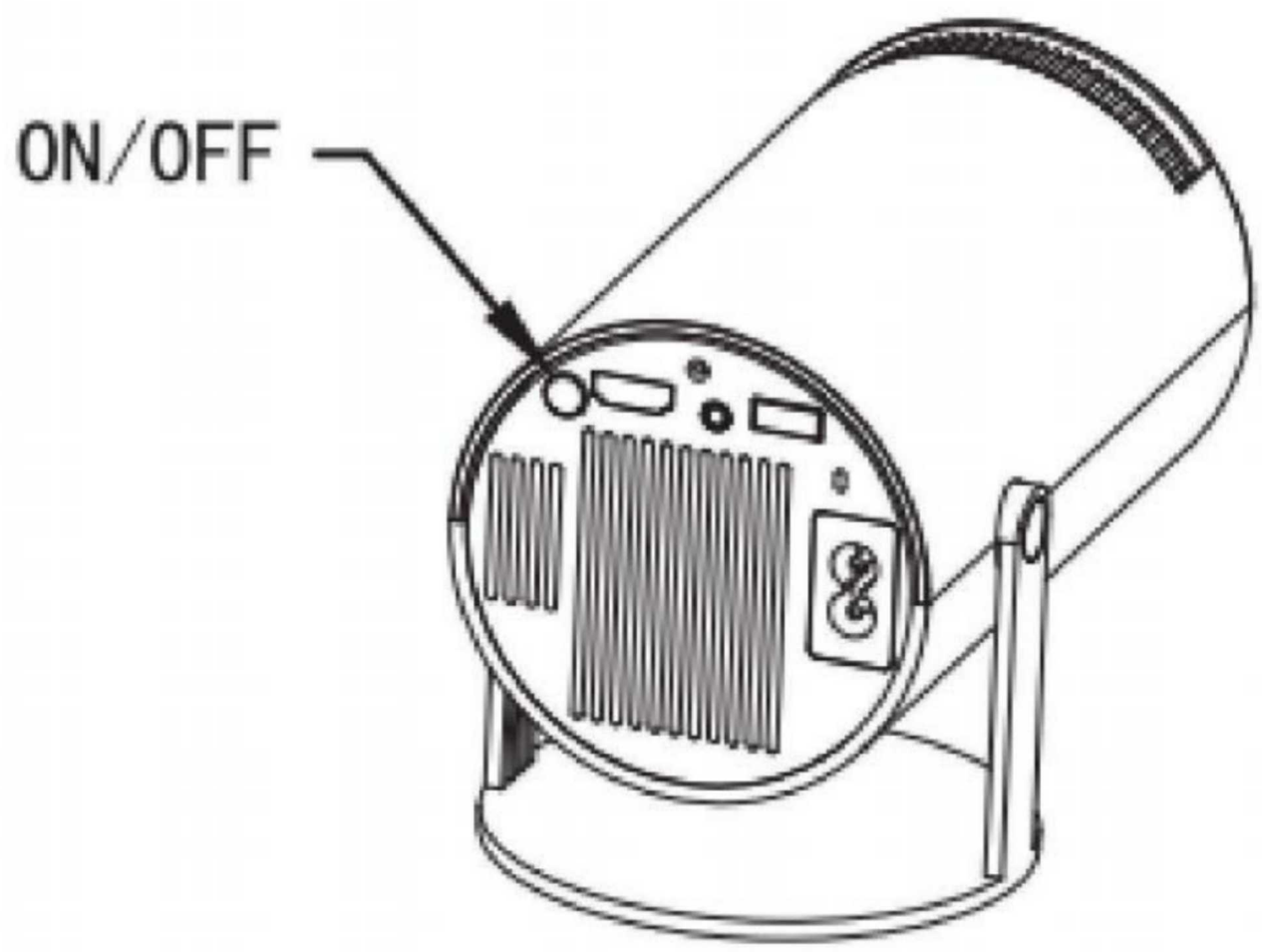

Projection Setting

Setting - Projector setting, enter to setup projection mode, keystone correction and screen zoom/smaller.

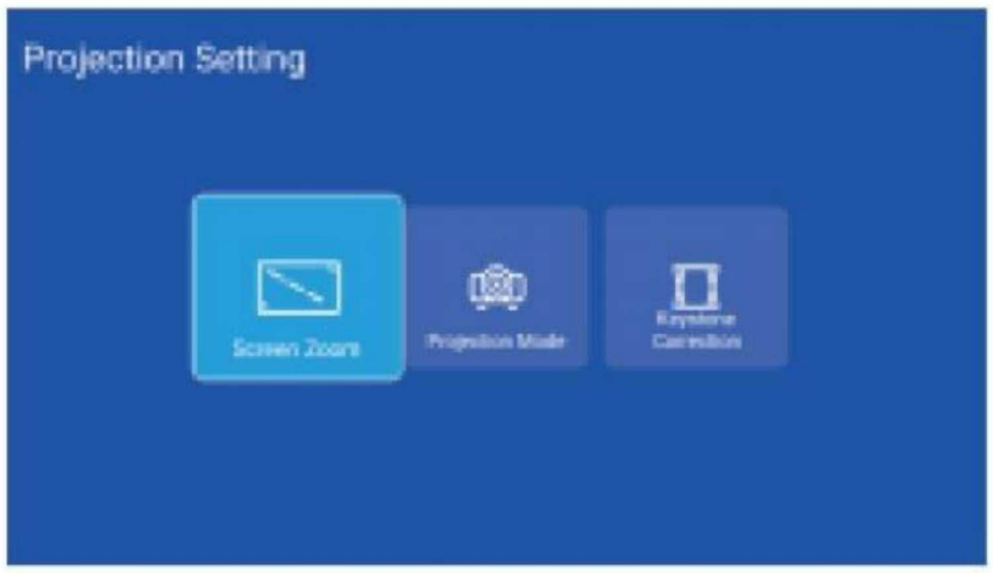

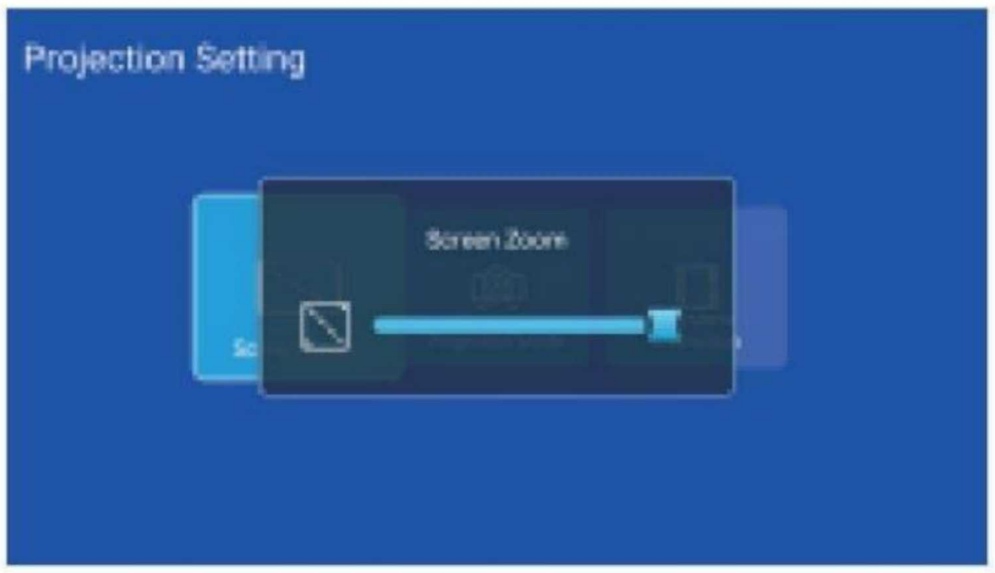

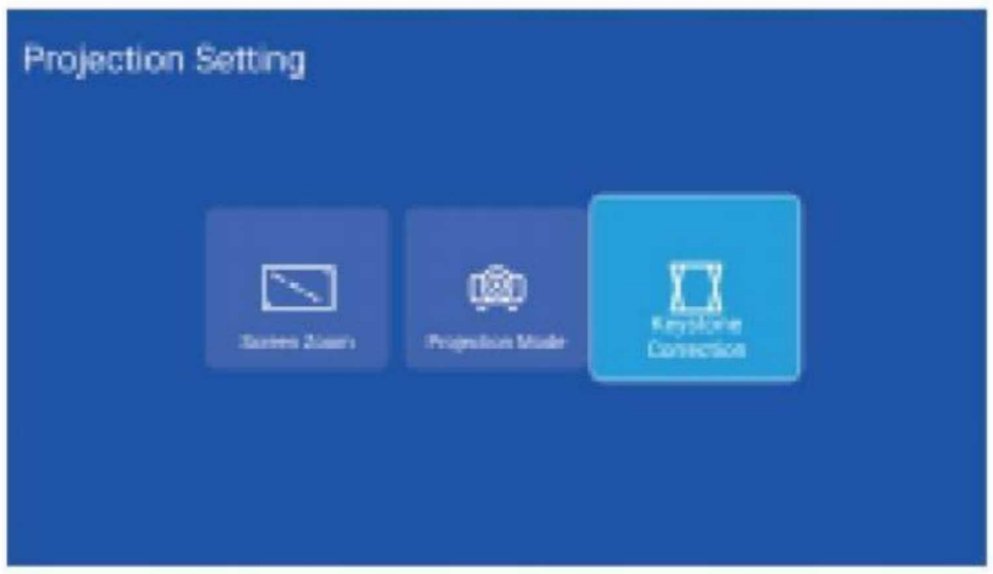

Audio Setting

Setting - Audio setting, enter to adjust volume.

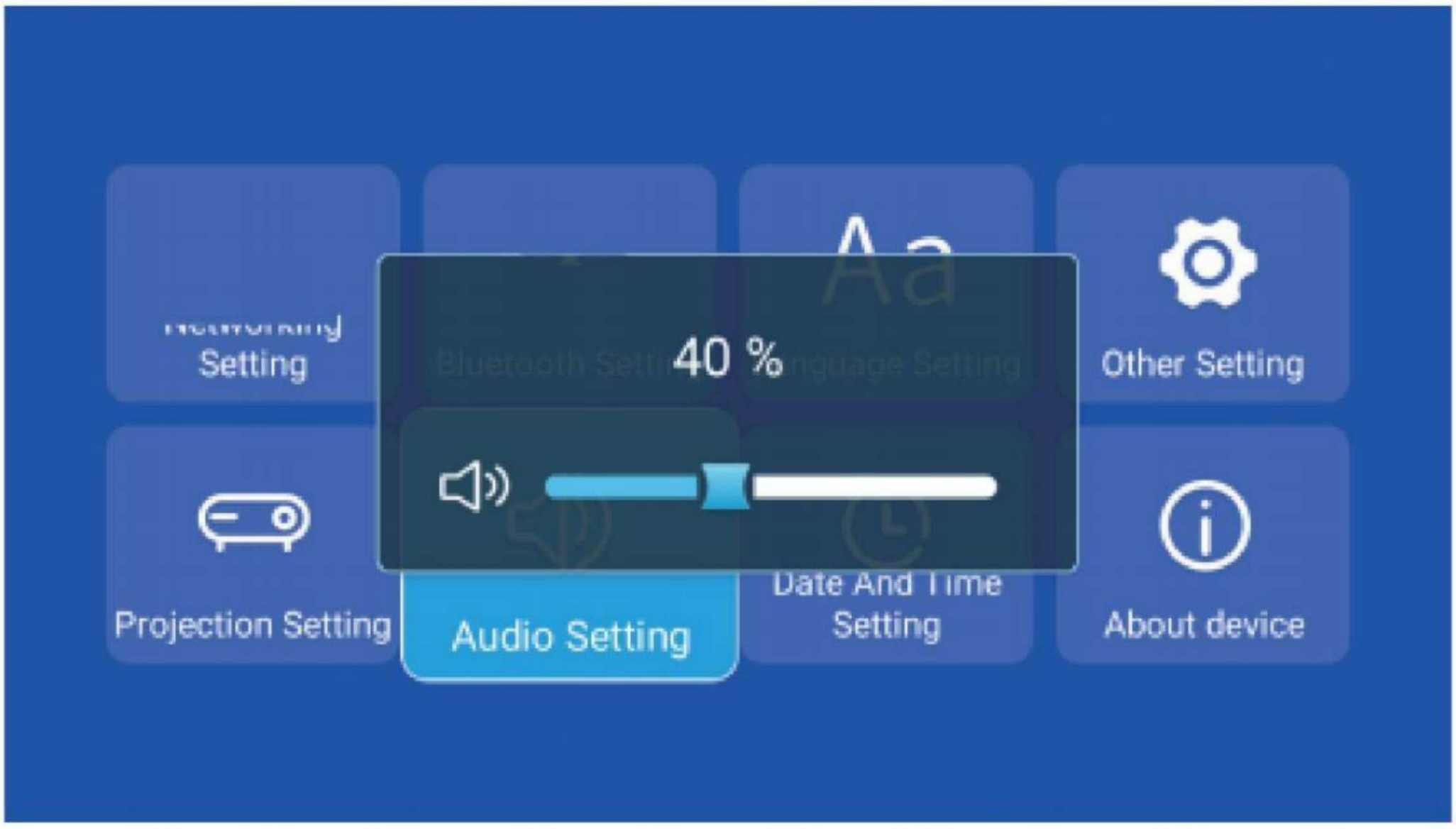

File

APPS-FileManager, Click to read the contents of external USB disk and hard disk device.

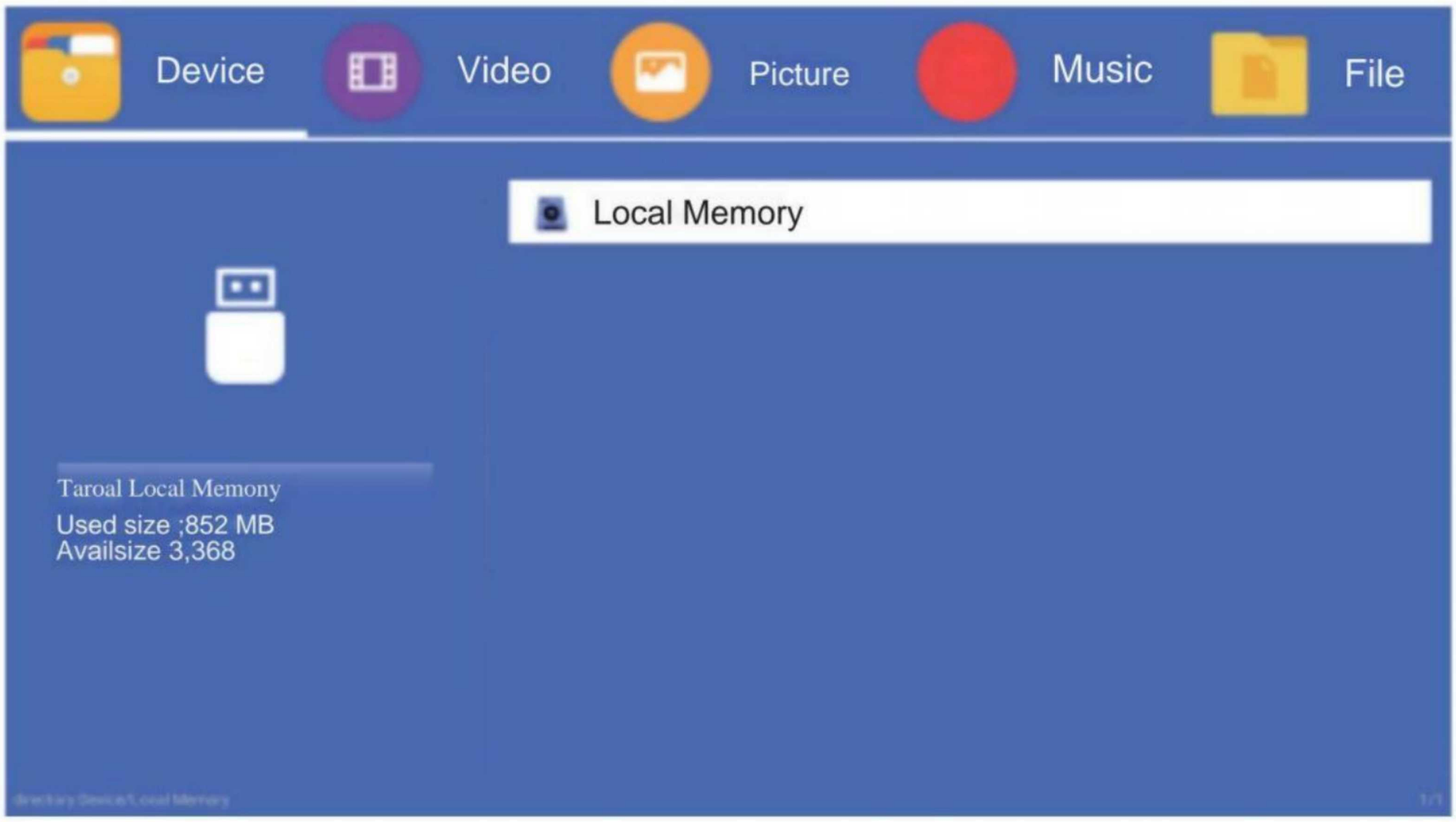

Signal

After connecting projector to other output device, enter HD.

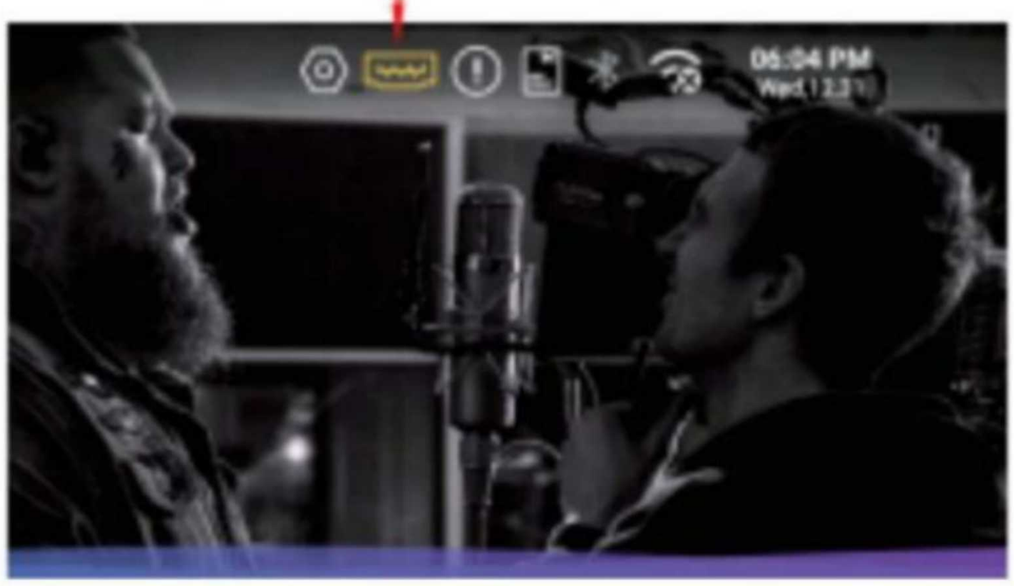

【Safety instructions】

- Please pay attention to important information related to the operation and maintenance of the projector. You should read this information carefully to avoid problems. Following safety instructions will increase the life of projector.
- Please consult the qualified personnel for installation and repair services, and do not use damaged wires, accessories and other peripherals.
- Projector should be kept away from flammable, explosive, strong electromagnetic interference (large radar stations, power stations, substations) ,etc. Strong ambient light (avoid direct sunlight), etc.
- Do not cover projector vents.
- Please use the original power adapter.
- Keep adequate ventilation and make sure vents are not covered to avoid projector overheating.
- When projector is working, please do not look directly into the lens, the strong light will flash your eyes and cause slight pain.
- Do not bend or drag the power cord.
- Do not put power cord under projector or any heavy objects.
- Do not cover other soft materials on power cord.
- Do not heat the power cord.
- Avoid touching power adaptor with wet hands.

【Disclaim】

This manual is general instructions, The pictures and functions in this manual should subject to the actual product. Our company is devoting to improve product performance, we reserve the right to modify product functions and interface described in this manual without notice.

Please keep your device properly. We are not responsible for any loss caused by wrong operation of software/hardware or repairing or any other reasons. We are not responsible for any loss of any third party claims.

This manual has been carefully checked by professional engineer, please understand for any inevitable omissions.

Attention:

Please do not look directly into the lens when projecting to prevent the strong light doing harm to your eyes. Kids should use the projector under the supervision of adults.

FCC Warning Statement: Changes or modifications to this unit not expressly approved by the party responsible for compliance could void the user's authority to operate the equipment. This equipment has been tested and found to comply with the limits for a Class B digital device, pursuant to Part 15 of the FCC Rules. These limits are designed to provide reasonable protection against harmful interference in a residential installation. This equipment generates, uses and can radiate radio frequency energy and, if not installed and used in accordance with the instructions, may cause harmful interference to radio communications. However, there is no guarantee that interference will not occur in a particular installation. If this equipment does cause harmful interference to radio or television reception, which can be determined by turning the equipment off and on, the user is encouraged to try to correct the interference by one or more of the following measures:

- **Reorient or relocate the receiving antenna.**
- **Increase the separation between the equipment and receiver.**
- **Connect the equipment into an outlet on a circuit different from that to which the receiver is connected.**
- **Consult the dealer or an experienced radio/TV technician for help.**

This device complies with Part 15 of the FCC Rules. Operation is subject to the following two conditions: (1) this device may not cause harmful interference, and (2) this device must accept any interference received, including interference that may cause undesired operation.

FCC Radiation Exposure Statement

The antennas used for this transmitter must be installed to provide a separation distance of at least 20 cm from all persons and must not be co‐located for operating in conjunction with any other antenna or transmitter.