3-in-1 Wireless Charger

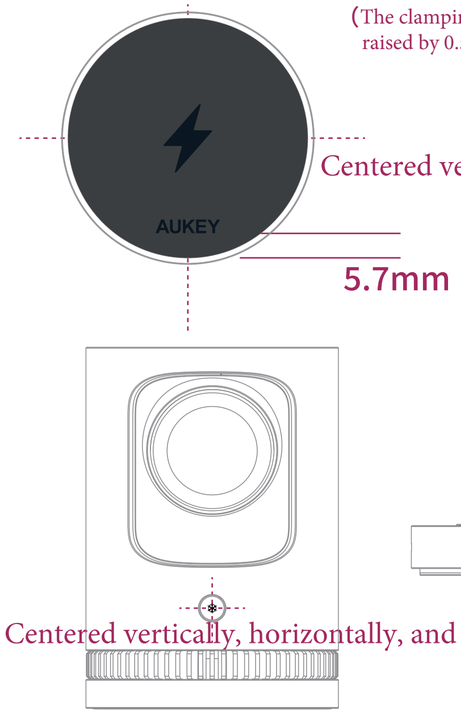

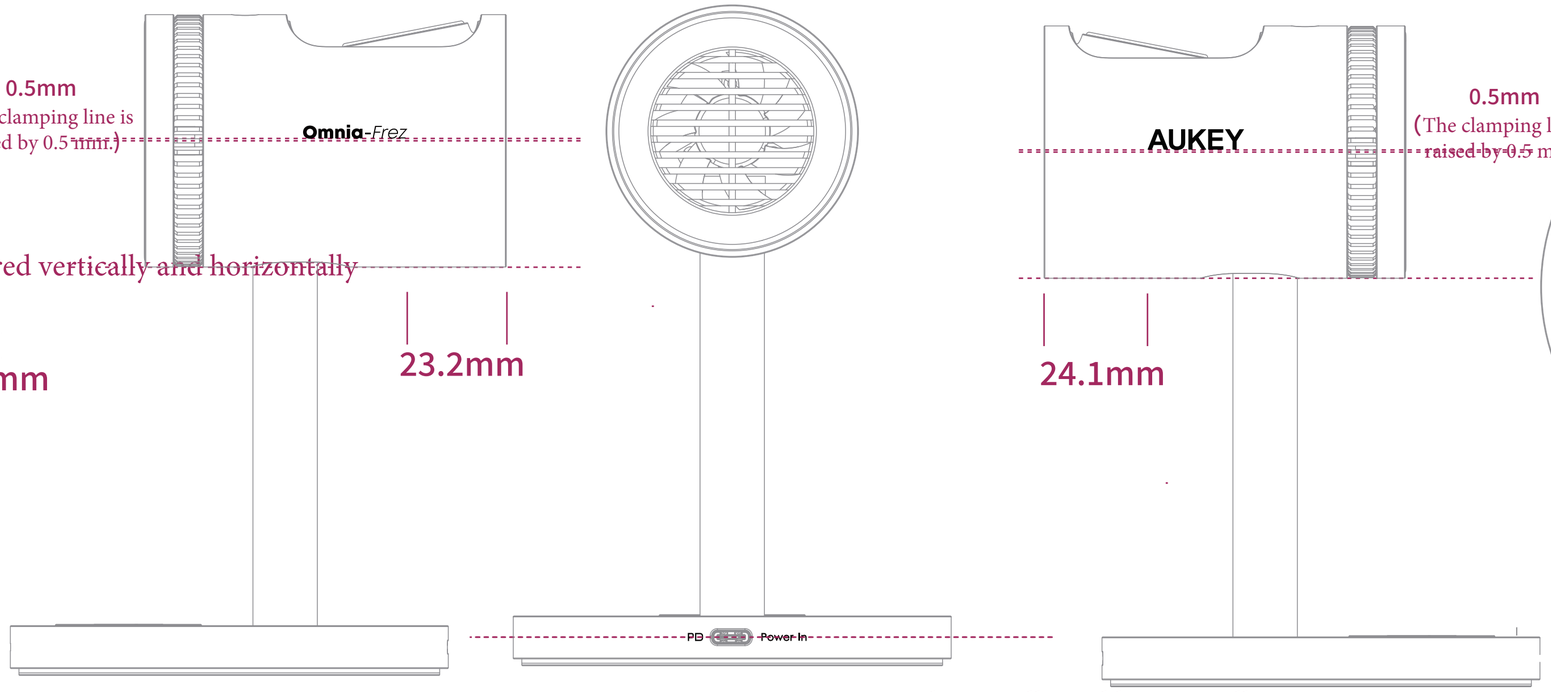

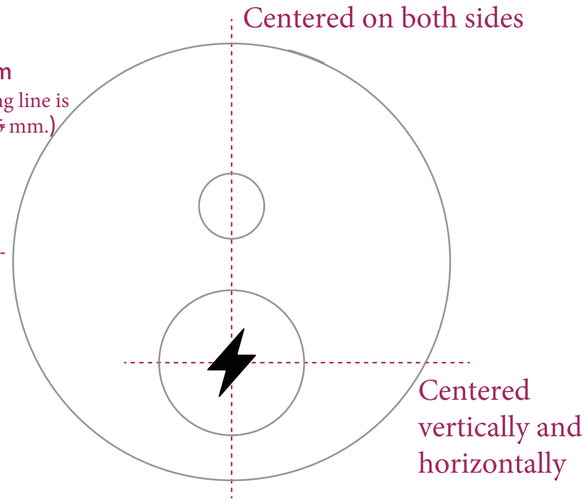

*Polishing of the position icon mold

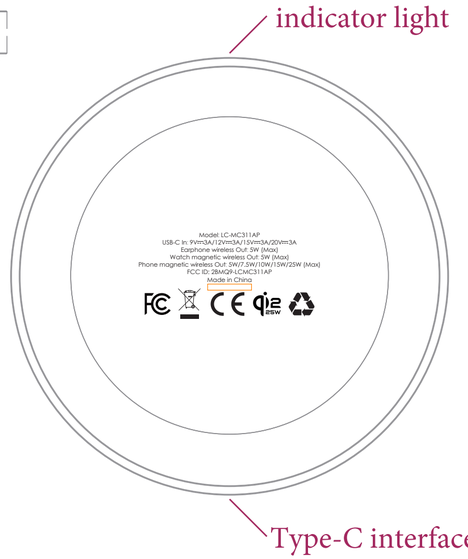

丝印内容

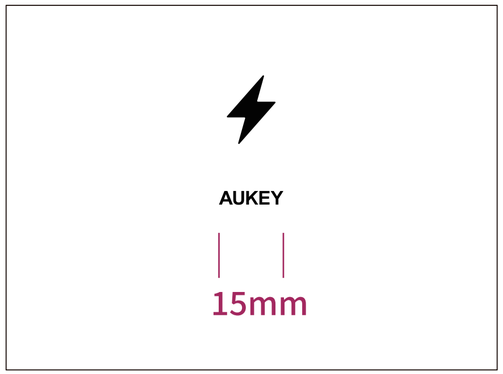

Screen printing color **Pantone Black 6C**

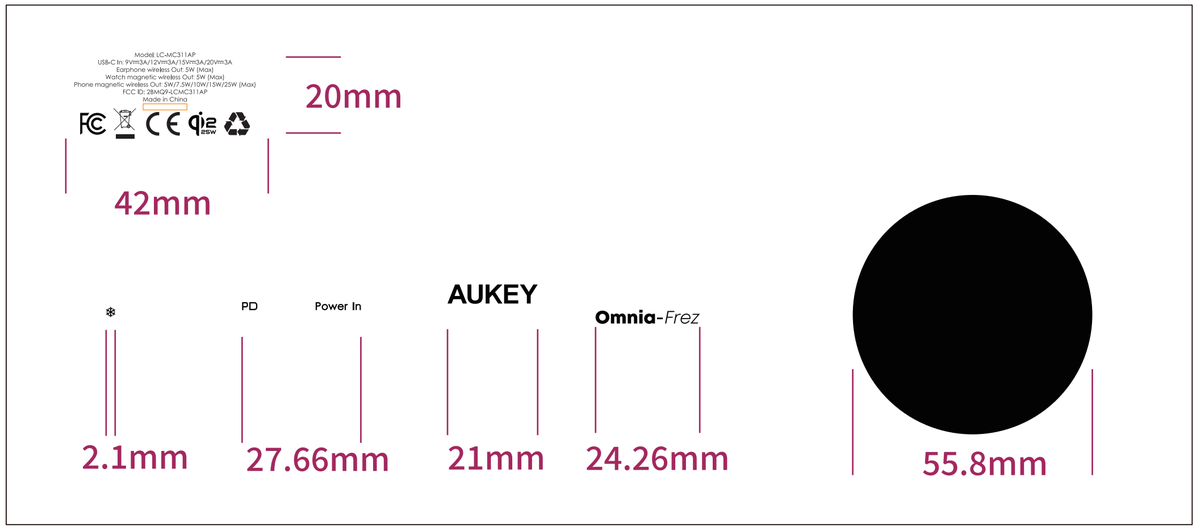

Screen printing color **Pantone PQ-426C**

* Reserved position at the bottom of the parameter silk-screening

* Silk-screening color strictly follows the provided color code standards