TEST REPORT

Applicant:	TOUCH DYNAMIC INC.
Address:	121 Corporate Blvd, South Plainfield, NJ 07080, USA
Equipment Type:	Vector
Model Name:	Vector
Brand Name:	TOUCH_DYNAMIC
FCC ID:	2BMQJ-VECTOR
Test Standard:	47 CFR Part 15 Subpart E (refer to section 3.1)
Sample Arrival Date:	Sep. 23, 2024
Test Date:	Oct. 21, 2024
Date of Issue:	Jan. 09, 2025

ISSUED BY:

Shanghai Tejet Communications Technology Co., Ltd. Testing Center

Tested by: Hai Su **Checked by:** Zhang Yanqing **Approved by:** Chen Zidong (Technical Director)

Hai Su Zhang Yanqing Chen Zidong

Revision History

Version	Issue Date	Revisions
Rev. 01	Jan. 09, 2025	Initial Issue

TABLE OF CONTENTS

1 GENERAL INFORMATION 4

1.1 Test Laboratory 4

1.2 Test Location 4

2 PRODUCT INFORMATION 5

2.1 Applicant Information 5

2.2 Manufacturer Information 5

2.3 General Description for Equipment under Test (EUT) 5

2.4 Technical Information 6

3 SUMMARY OF TEST RESULTS 7

3.1 Test Standards 7

3.2 Test Verdict 7

4 GENERAL TEST CONFIGURATIONS 8

4.1 Test Environments 8

4.2 Test Equipment List 8

4.3 Test Software List 8

4.4 Decision Rule 8

4.5 Measurement Uncertainty 9

4.6 Description of Test Setup 9

5 TEST ITEMS 10

5.1 DFS 10

ANNEX A TEST RESULT 17

A.1 CHANNEL CLOSING TRANSMISSION AND CHANNEL MOVE TIME 17

A.2 NON-OCCUPANCY PERIOD 20

ANNEX B TEST SETUP PHOTOS 21

ANNEX C EUT EXTERNAL PHOTOS 21

ANNEX D EUT INTERNAL PHOTOS 21

1 GENERAL INFORMATION

1.1 Test Laboratory

Name	Shanghai Tejet Communications Technology Co., Ltd. Testing Center
Address	1st to 2nd floors, Building 1, No. 222 Xuanlan Road, Xuanqiao Town, Pudong New District, Shanghai

1.2 Test Location

Name	Shanghai Tejet Communications Technology Co., Ltd. Testing Center
Location	1st to 2nd floors, Building 1, No. 222 Xuanlan Road, Xuanqiao Town, Pudong New District, Shanghai
Accreditation Certificate	The laboratory is a testing organization accredited by FCC as a accredited testing laboratory. The designation number is CN1352.

2 PRODUCT INFORMATION

2.1 Applicant Information

Applicant	TOUCH DYNAMIC INC.
Address	121 Corporate Blvd, South Plainfield, NJ 07080, USA

2.2 Manufacturer Information

Manufacturer	TOUCH DYNAMIC INC.
Address	121 Corporate Blvd, South Plainfield, NJ 07080, USA

2.3 General Description for Equipment under Test (EUT)

EUT Name	Vector
Model Name Under Test	Vector
Series Model Name	N/A
Description of Model name differentiation	N/A
Sample Number	SC-SH2490037-S03 SC-SH2490037-S10
Hardware Version	V1.0
Software Version	D0773_TOUCH_DYNAMIC_COMBO_20241029
Dimensions (Approx.)	L:367mm* W:200mm* H:290mm*
Weight (Approx.)	Main screen: 3986g Secondary screen: 568g

2.4 Technical Information

Network and Wireless connectivity	Bluetooth (BR+EDR+BLE) WIFI 2.4G:11b,11g,11n(HT20/40),11ax(HE20/40) WIFI 5G:11a,11n(HT20/40),11ac(VHT20/40/80),11ax(HE20/40/80)

The requirement for the following technical information of the EUT was tested in this report:

Frequency Range		5250 MHz to 5350 MHz, 5470 MHz to 5725 MHz
Maximum Output Power		5250 MHz to 5350 MHz: 18.42 dBm 5470 MHz to 5725 MHz: 20.35 dBm
Antenna Type	Main Antenna	PIFA Antenna
	Aux. Antenna	
Antenna Gain	Main Antenna	5250 MHz to 5350 MHz: 3.20 dBi 5470 MHz to 5725 MHz: 3.30 dBi
	Aux. Antenna	5250 MHz to 5350 MHz: 4.60 dBi 5470 MHz to 5725 MHz: 5.10 dBi
Note: This device (Client) is without radar detection, then the manufacturer statement confirming that information regarding the parameters of the detected Radar Waveforms is not available to the end user. And the device doesn't have Ad Hoc mode on DFS frequency band.		

3 SUMMARY OF TEST RESULTS

3.1 Test Standards

No.	Identity	Document Title
1	47 CFR Part 15 Subpart E	Unlicensed National Information Infrastructure Devices
2	KDB Publication 905462 D02v02	UNII DFS Compliance Procedures New Rules
3	KDB Publication 905462 D03v01r02	UNII Clients Without Radar Detection New Rules
4	KDB Publication 789033 D02v02r01	Guidelines for Compliance Testing of Unlicensed National Information Infrastructure (U-NII) Devices Part 15, Subpart E

3.2 Test Verdict

No.	Description	FCC Part No.	RSS Part No.	Verdict	Remark
1	Channel Move Time	15.407	N/A	Pass	Applicable
2	Channel Closing Transmission Time	15.407	N/A	Pass	Applicable
3	Non- Occupancy Period	15.407	N/A	Pass	Applicable

4 GENERAL TEST CONFIGURATIONS

4.1 Test Environments

During the measurement, the normal environmental conditions were within the listed ranges:

Relative Humidity	53% to 57%	
Atmospheric Pressure	101 kPa	
Temperature	NT (Normal Temperature)	+22.8℃ to +23.7℃
Working Voltage of the EUT	NV (Normal Voltage)	24 V

4.2 Test Equipment List

Description	Manufacturer	Model	Serial No.	Cal. Date	Cal. Due
Spectrum Analyzer	KEYSIGHT	N9020A	MY54420147	2024.02.22	2025.02.21
Signal Generator	Anritsu	MG3710E	6262063515	2024.02.22	2025.02.21
Signal Generator	R&S	SMB100A	182635	2024.10.17	2025.10.16
Vector Signal Generator	KEYSIGHT	E4438C	MY47271876	2024.02.22	2025.02.21

Master	Access Point	
	Brand Name	Aerohive
	Model No.	AP230
	Serial No.	AH-AP-230-AC-W
	FCC ID	WBV-AP230
	SPEC.	The maximum EIRP is18.5dBm, Antenna Gain is 6.57dBi

4.3 Test Software List

Description	Manufacturer	Software Version	Serial No.
BL410R	BALUN	V2.1.1.496	N/A

4.4 Decision Rule

☐ No Need

☒ Use General conformity decision rule (Consider uncertainty or not ☒No ☐Yes)

☐ Use Special Conformity Decision Rule (Consider uncertainty or not ☐No ☐Yes)

4.5 Measurement Uncertainty

The following measurement uncertainty levels have been estimated for tests performed on the EUT as specified in CISPR 16-4-2.

This uncertainty represents an expanded uncertainty expressed at approximately the 95% confidence level using a coverage factor of k=2.

Parameters	Uncertainty
Occupied Channel Bandwidth	2.4 %
RF output power, conducted	0.41 dB
Power Spectral Density, conducted	1.73 dB
Unwanted Emissions, conducted	1.73 dB
All emissions, radiated	4.57 dB
Temperature	0.82 °C
Humidity	4.1 %

4.6 Description of Test Setup

4.6.1 Conducted Test Setup Configuration

Client without Radar Detection Mode

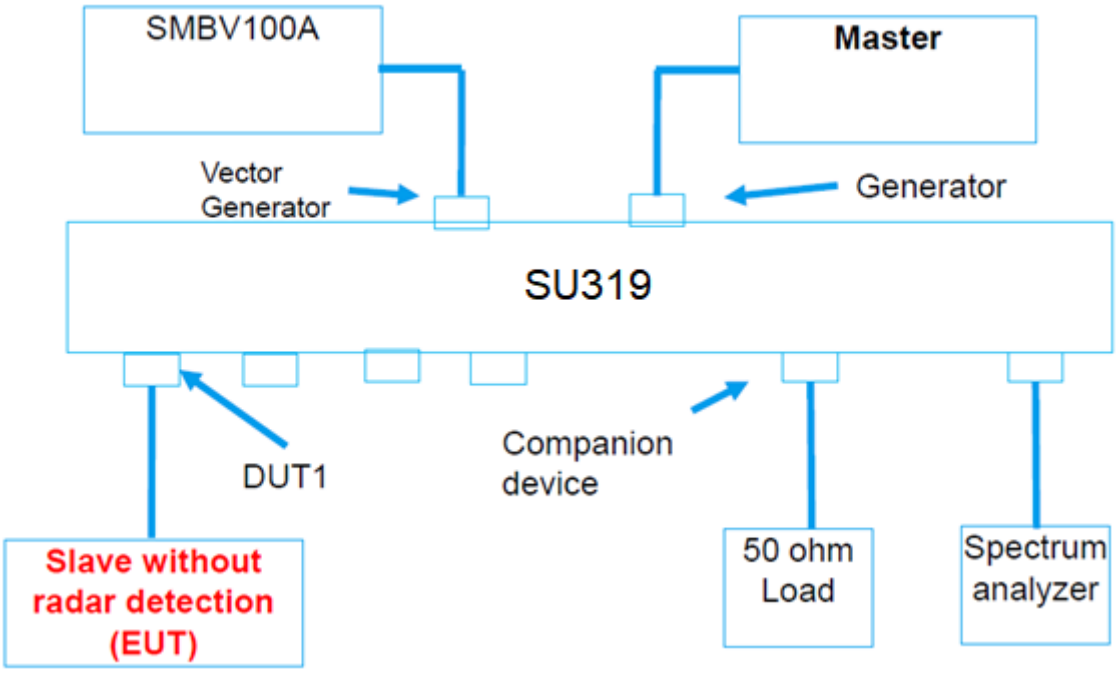

The UUT is a U-NII Device operating in Client mode without radar detection. The radar test signals are injected into the Master Device.

(Diagram 1)

5 TEST ITEMS

5.1 DFS

5.1.1 U-NII DFS Rule Requirements

5.1.1.1 Working Mode and Required Test Items

The manufacturer shall state whether the UUT is capable of operating as a Master and/or a Client. If the UUT is capable of operating in more than one operating mode then each operating mode shall be tested separately. See tables 1 and 2 for the applicability of DFS requirements for each of the operational modes.

APPLICABILITY OF DFS REQUIREMENTS PRIOR TO USE A CHANNEL

Requirement	Operational Mode		
	Master	Client without radar detection	Client with radar detection
Non-Occupancy Period	✓	✓	✓
DFS Detection Threshold	✓	Not required	✓
Channel Availability Check Time	✓	Not required	Not required
Uniform Spreading	✓	Not required	Not required
U-NII Detection Bandwidth	✓	Not required	✓

APPLICABILITY OF DFS REQUIREMENTS DURING NORMAL OPERATION

Requirement	Operational Mode		
	Master	Client without radar detection	Client with radar detection
DFS Detection Threshold	✓	Not required	✓
Channel Closing Transmission Time	✓	✓	✓
Channel Move Time	✓	✓	✓
U-NII Detection Bandwidth	✓	Not required	✓

5.1.2 Test Limits and Radar Signal Parameters

Detection Threshold Values

DFS DETECTION THRESHOLDS FOR MASTER DEVICES AND CLIENT DEVICES WITH RADAR DETECTION

Maximum Transmit Power	Value (See Note 1 & 2)
≥ 200 milliwatt	-64 dBm
< 200 milliwatt	-62 dBm
Note 1: This is the level at the input of the receiver assuming a 0 dBi receive antenna. Note 2: Throughout these test procedures an additional 1 dB has been added to the amplitude of the test transmission waveforms to account for variations in measurement equipment. This will ensure that the test signal is at or above the detection threshold level to trigger a DFS response.	

DFS RESPONSE REQUIREMENT VALUES

Parameter	Value
Non-occupancy period	Minimum 30 minutes
Channel Availability Check Time	60 seconds
Channel Move Time	10 seconds See Note 1.
Channel Closing Transmission Time	200 milliseconds + an aggregate of 60 milliseconds over remaining 10 second period. See Note 1&2.
U-NII Detection Bandwidth	100% of the UNII transmission power bandwidth. See Note 3.
Note 1: The instant that the Channel Move Time and the Channel Closing Transmission Time begins is as follows: • For the Short Pulse Radar Test Signals this instant is the end of the Burst. • For the Frequency Hopping radar Test Signal, this instant is the end of the last radar Burst generated. • For the Long Pulse Radar Test Signal this instant is the end of the 12 second period defining the Radar Waveform. Note 2: The Channel Closing Transmission Time is comprised of 200 milliseconds starting at the beginning of the Channel Move Time plus any additional intermittent control signals required to facilitate a Channel move (an aggregate of 60 milliseconds) during the remainder of the 10 second period. The aggregate duration of control signals will not count quiet periods in between transmissions. Note 3: During the U-NII Detection Bandwidth detection test, radar type 1 is used and for each frequency step the minimum percentage of detection is 90 percent. Measurements are performed with no data traffic.	

Parameters of DFS Test Signals

Step intervals of 0.1 microsecond for Pulse Width, 1 microsecond for PRI, 1 MHz for chirp width and 1 for the number of pulses will be utilized for the random determination of specific test waveforms.

SHORT PULSE RADAR TEST WAVEFORMS

Radar Type	Pulse Width (μsec)	PRI (μsec)	Number of Pulses	Minimum Percentage of Successful Detection	Minimum Number of Trials
0	1	1428	18	See Note	See Note
1	1	Test A: 15 unique PRI values randomly selected from the list of 23 PRI values in Table 5a Test B: 15 unique PRI values randomly selected within the range of 518-3066 μsec, with a minimum increment of 1 μsec, excluding PRI values selected in Test A	$\text{Roundup}\left\{\left(\frac{1}{360}\right)\cdot\left(\frac{19\cdot 10^6}{\text{PRI}_{\mu\text{sec}}}\right)\right\}$	60%	30
2	1-5	150-230	23-29	60%	30
3	6-10	200-500	16-18	60%	30
4	11-20	200-500	12-16	60%	30
Aggregate (Radar Types 1-4)				80%	120
Note: Short Pulse Radar Type 0 should be used for the detection bandwidth test, channel move time, and channel closing time tests.					

LONG PULSE RADAR TEST WAVEFORM

Radar Type	Pulse Width (μsec)	Chirp Width (MHz)	PRI (μsec)	Number of Pulses per Burst	Number of Bursts	Minimum Percentage of Successful Detection	Minimum Number of Trials
5	50-100	5-20	1000-2000	1-3	8-20	80%	30

FREQUENCY HOPPING RADAR TEST WAVEFORM

Radar Type	Pulse Width (μsec)	PRI (μsec)	Pulses per Hop	Hopping Rate (kHz)	Hopping Sequence Length (msec)	Minimum Percentage of Successful Detection	Minimum Number of Trials
6	1	333	9	0.333	300	70%	30

5.1.2.1 Test Setup

See 4.6 for test setup description for the radiated test. The photo of test setup please refer to ANNEX B.

5.1.2.2 Test Procedure

DFS MEASUREMENT SYSTEM:

A complete DFS Measurement System consists of two subsystems: (1) the Radar Signal Generating Subsystem and (2) the Traffic Monitoring Subsystem. The control PC is necessary for generating the Radar waveforms in Table 6, 7 and 8. The traffic monitoring subsystem is specified to the type of unit under test (UUT).

Conducted setup configuration of ADT DFS Measurement System

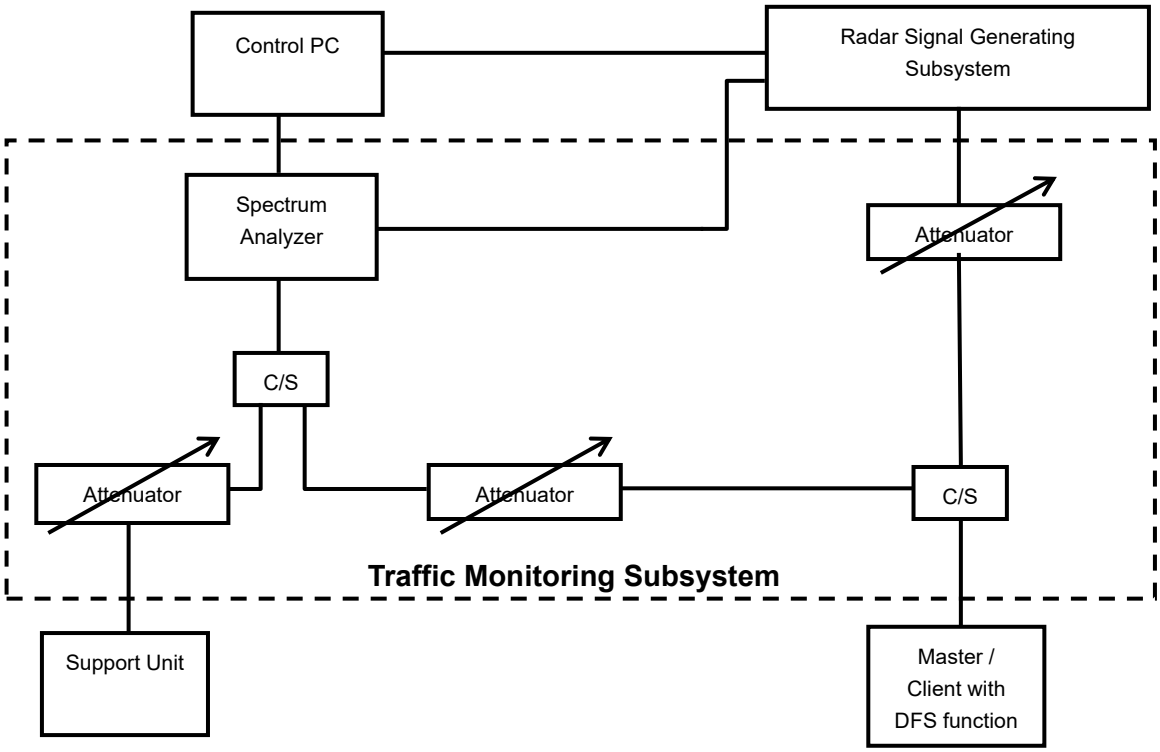

The test transmission will always be from the Master Device to the Client Device. While the Client device is set up to associate with the Master device and play the MPEG file (6 ⊖ Magic Hours) from Master device, the designated MPEG test file and instructions are located at: http://ntiacsd.ntia.doc.gov/dfs/.

CALIBRATION OF DFS DETECTION THRESHOLD LEVEL:

The measured channel is 5500 MHz in 20MHz Bandwidth and 5530MHz in 80MHz Bandwidth. The radar signal was the same as transmitted channels, and injected into the antenna port of AP (master) or Client Device with Radar Detection, measured the channel closing transmission time and channel move time. The Master antenna gain is 6.57dBi and required detection threshold is-54.43dBm (= -62 +1 +6.57)dBm. The calibrated conducted detection threshold level is set to -54.43 dBm.

Conducted setup configuration of Calibration of DFS Detection Threshold Level

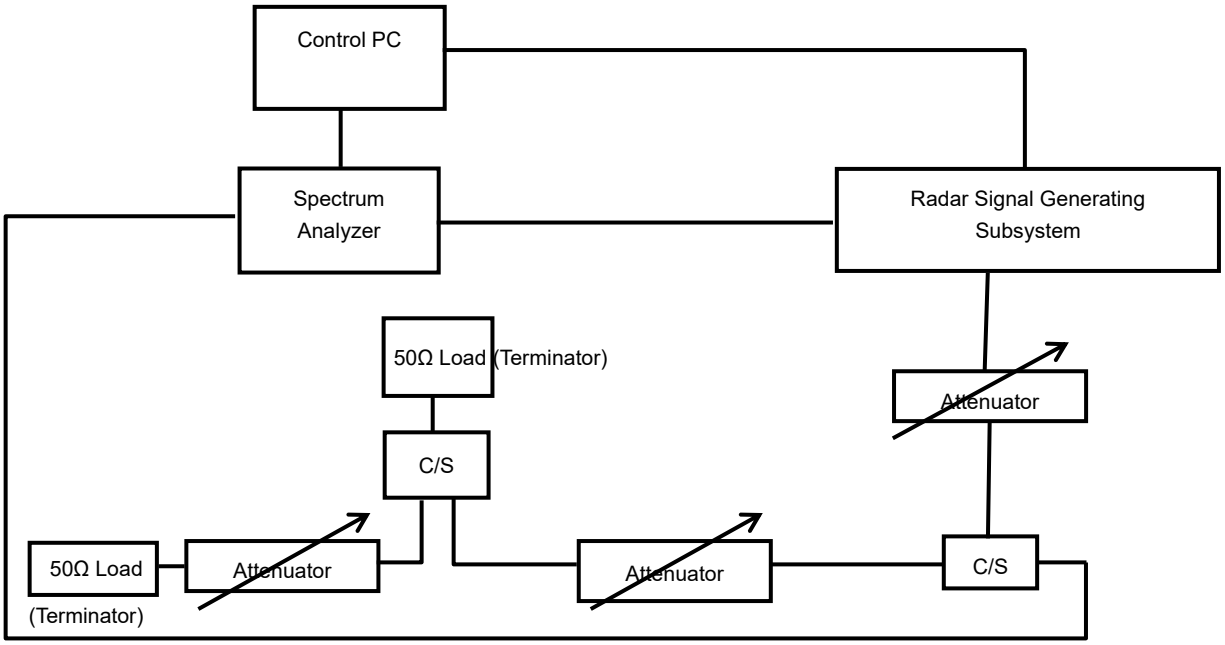

Radar Waveform Calibration Result

Radar Type 0 Calibration Plot (5290MHz)

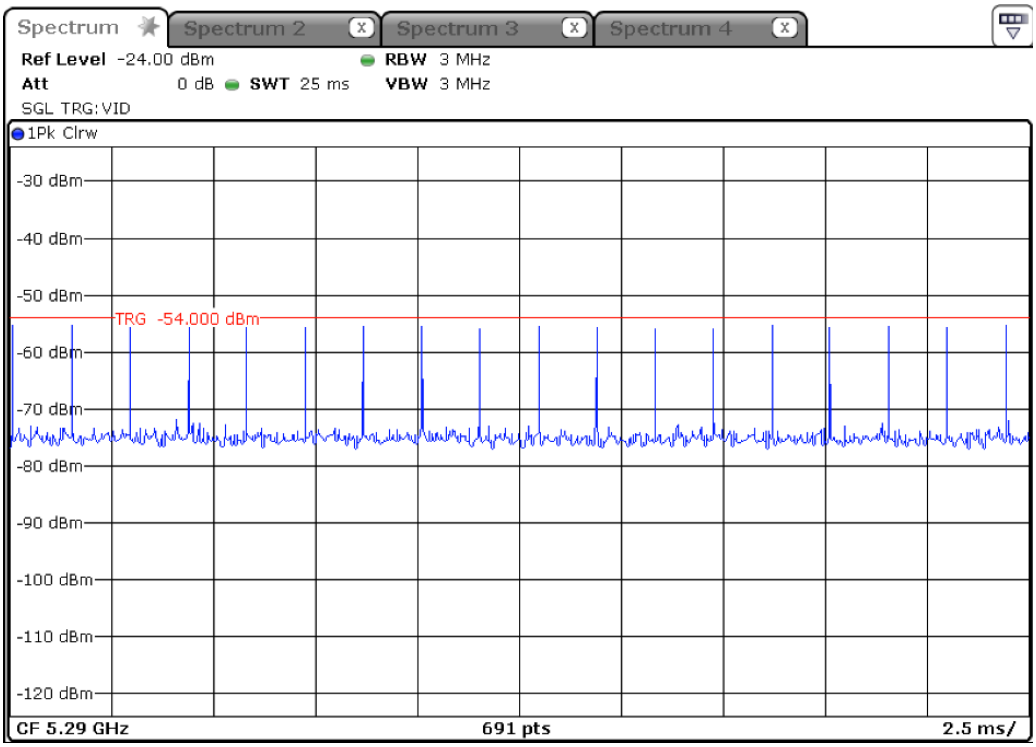

Radar Type 1 test A Calibration Plot (5290MHz)

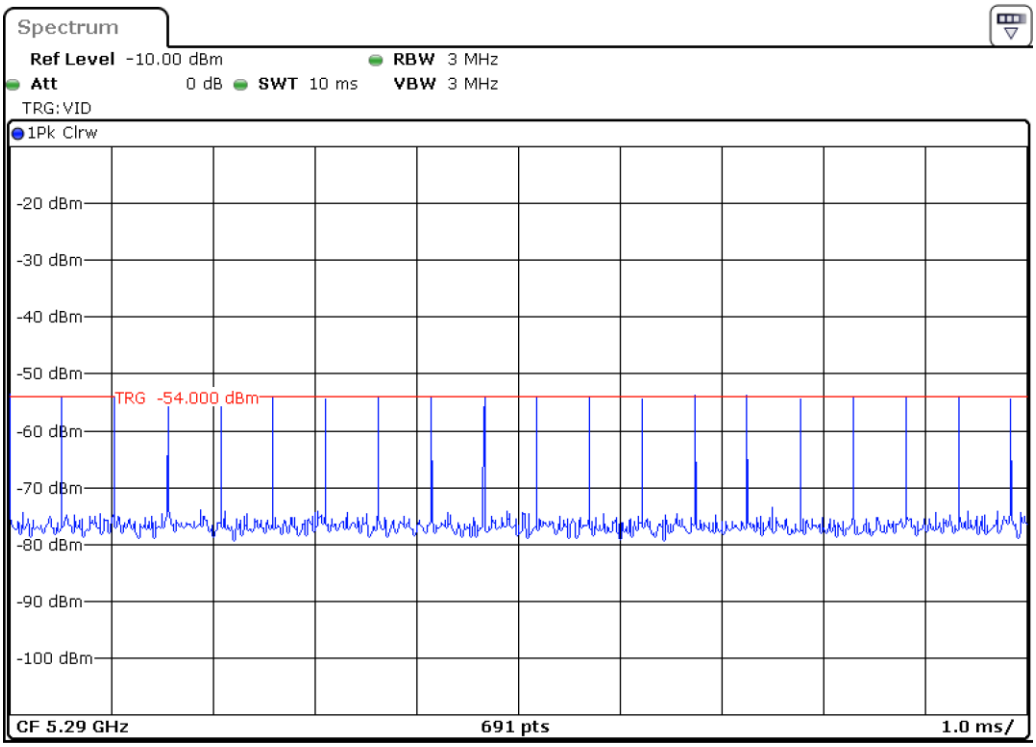

5.1.2.3 Test Result

Please refer to ANNEX A.

ANNEX A TEST RESULT

A.1 CHANNEL CLOSING TRANSMISSION AND CHANNEL MOVE TIME

Result of DFS Channel Shutdown

Note: The radar test signals are injected into the Master Device.

This test was investigated for different bandwidth (the lowest and the highest bandwidth). The following plots was done on 80MHz as a representative

Description	Operation Mode	Operation Channel	Value (s)	Limit
Channel Move Time	802.11a	52	2.048	10 s
Channel Closing Transmission Time	802.11a	52	0.026	200 milliseconds + an aggregate of 60 milliseconds over remaining 10 second period.
Channel Move Time	802.11a	100	1.946	10 s
Channel Closing Transmission Time	802.11a	100	0.026	200 milliseconds + an aggregate of 60 milliseconds over remaining 10 second period.
Test Verdict	Pass			

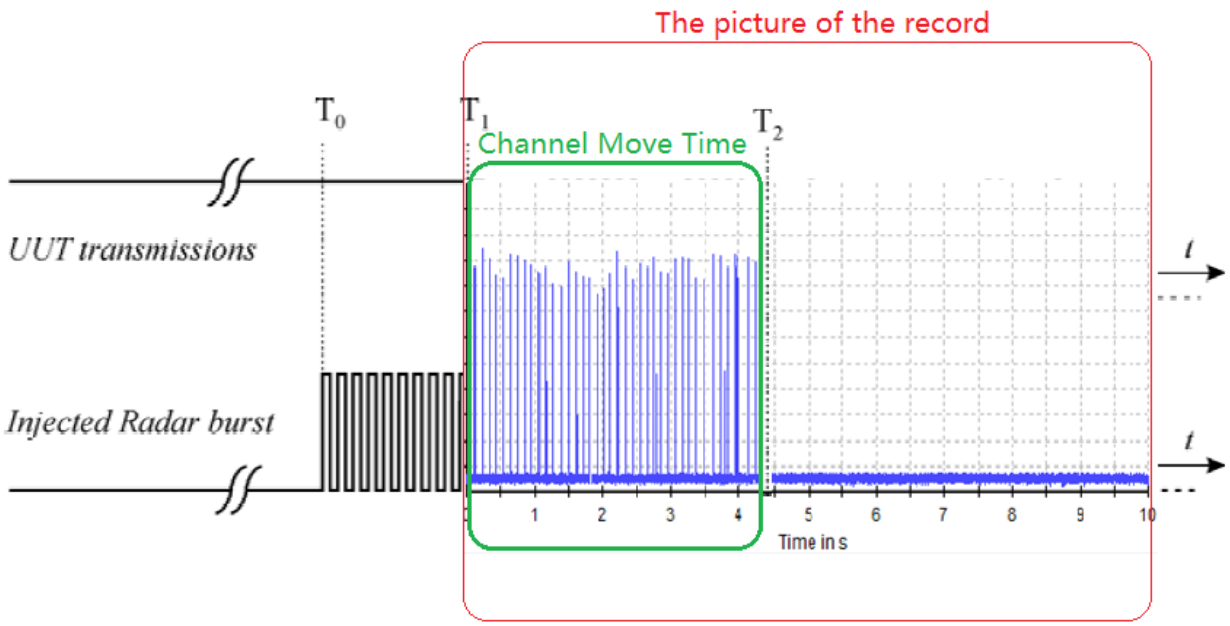

T0 denotes DFS test signal start generated on the channel.

T1 denotes the end of the radar burst.

T2 denotes the instant when the UUT has ceased all transmissions on the channel.

The time difference between T1 and T2 shall be measured. This value *(Channel Move Time*) shall be noted and compared with the limit.

The aggregate duration (*Channel Closing Transmission Time)* of all transmissions from the UUT on Ch_r during the *Channel Move Time* shall be compared to the limit.

DFS Test schematic graphic

802.11a Channel 52

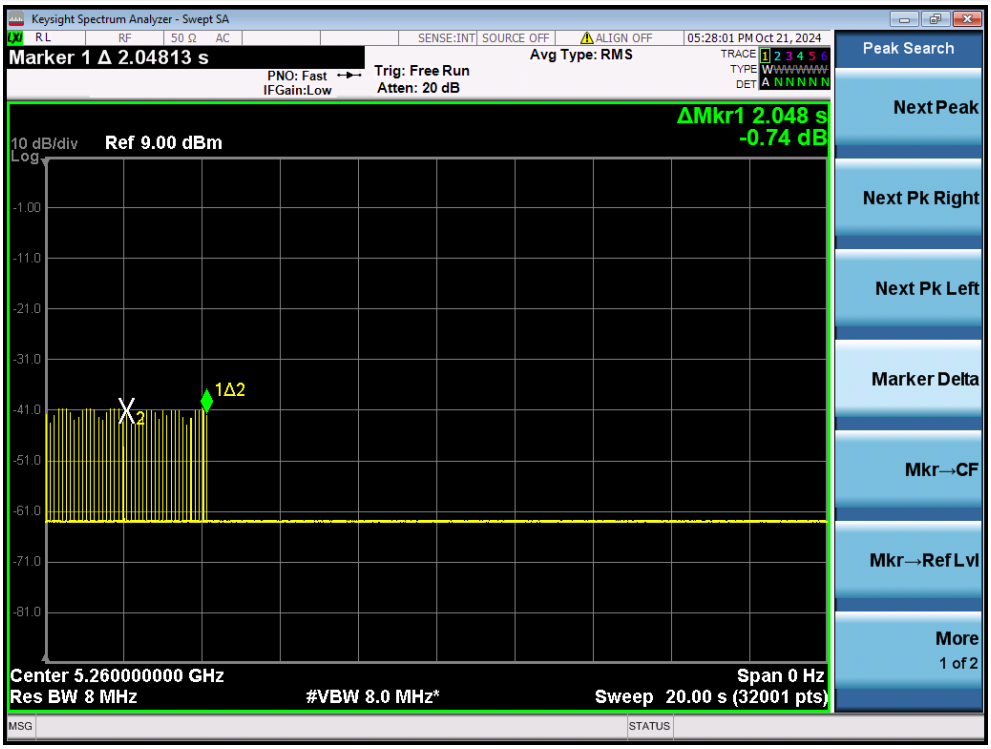

802.11a Channel 100

A.2 NON-OCCUPANCY PERIOD

Master was off.

During the 30 minutes observation time, The UUT did not make any transmissions in the DFS band after UUT power up.

802.11a Channel 52

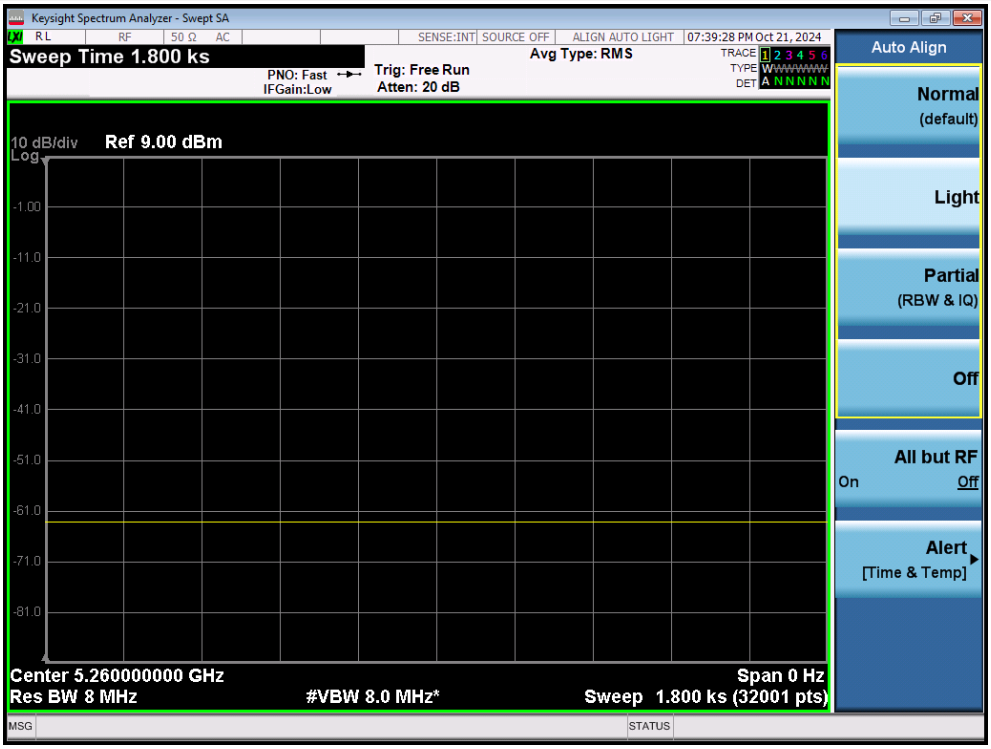

802.11a Channel 100

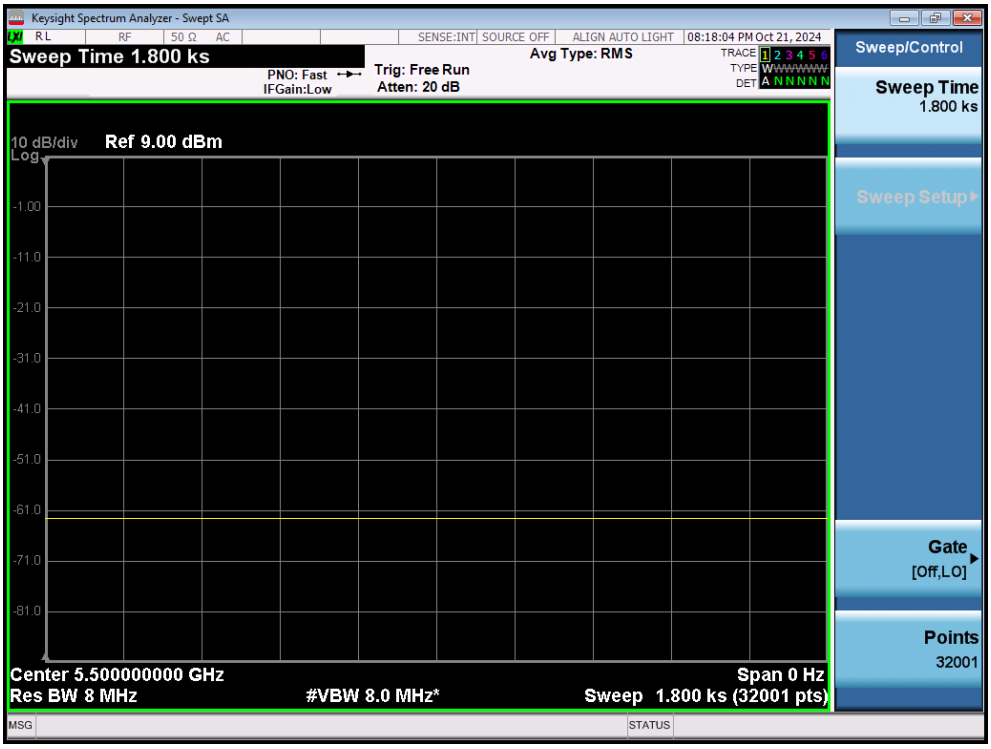

ANNEX B TEST SETUP PHOTOS

Please refer the document “BL-SH2490677-AR-1.PDF”.

ANNEX C EUT EXTERNAL PHOTOS

Please refer the document “BL-SH2490677-AW.PDF”.

ANNEX D EUT INTERNAL PHOTOS

Please refer the document “BL-SH2490677-AI.PDF”.

Statement

1. The Testing Center guarantees the scientificity, accuracy and impartiality of the test, and is responsible for all the information in the report, except the information provided by the customer. The customer is responsible for the impact of the information provided on the validity of the results.

2. For the report with Accreditation Symbol, the items marked with "☆" are not within the accredited scope.

3. This report is invalid if it is altered, without the signature of the testing and approval personnel, or without the test report stamp.

4. The test data and results are only valid for the tested samples provided by the customer.

5. This report shall not be partially reproduced without the written permission of the Testing Center.

6. Any objection shall be raised to the Testing Center within 30 days after receiving the report.

--END OF REPORT--