RF TEST REPORT

Report No.: SHATBL2412020W01

Applicant	:	Foshan Microcore Electronics Technology Co.,Ltd
Product Name	:	Wireless Shower Water Temperature Monitor
Brand Name	:	N/A
Model Name	:	MX08
Series Model	:	MX07
FCC ID	:	2BMQM-MX01
Test Standard	:	47 CFR Part 15 Subpart C, Section 15.231
Date of Sample Arrival	:	2024.12.11
Date of Test	:	2024.12.11~2024.12.18
Issue Date	:	2024.12.18

Report Prepared by : Chris Xu

(Chris Xu)

Report Approved by : Guozheng Li

(Guozheng Li)

Authorized Signatory : Terry Yang

(Terry Yang)

"Shanghai ATBL Technology Co., Ltd." hereby certifies that according to actual testing conditions. The test results or observations are provided in accordance with measured value, without taking risks caused by uncertainty into account. Without explicit stipulation in special agreements, standards or regulations, ATBL shall not assume any responsibility. The test results or observations are applicable only to tested sample. Client shall be responsible for representativeness of the sample and authenticity of the material. This report will be void without authorized signature or special seal for testing report. Do not copied without authorization.

Tel:+86(0)21-51298625 **Web:www.atbl-lab.com** **Email:atbl@atbl-lab.com**

Table of Contents

REVISION HISTORY **4**

1. SUMMARY OF TEST RESULTS **5**

2. GENERAL INFORMATION **6**

2.1 APPLICANT 6

2.2 MANUFACTURER 6

2.3 FACTORY 6

2.4 GENERAL DESCRIPTION OF THE EUT 7

2.5 ENVIRONMENTAL CONDITIONS 7

2.6 DESCRIPTION OF THE TEST MODES 8

2.7 BLOCK DIAGRAM SHOWING THE CONFIGURATION OF SYSTEM TESTED 8

2.8 DESCRIPTION OF NECESSARY ACCESSORIES AND SUPPORT UNITS 8

2.9 LABORATORY INFORMATION 9

2.10 MEASUREMENT UNCERTAINTY 9

2.11 EQUIPMENTS LIST 10

3. CONDUCTED EMISSION MEASUREMENT **11**

3.1 POWER LINE CONDUCTED EMISSION LIMITS 11

3.2 TEST PROCEDURE 11

3.3 TEST SETUP 12

3.4 EUT OPERATING CONDITIONS 12

3.5 TEST RESULTS 13

4. FIELD STRENGTH OF FUNDAMENTAL EMISSIONS ANDRADIATED EMISSION MEASUREMENT **14**

4.1 RADIATED EMISSION LIMITS 14

4.2 TEST PROCEDURE 16

4.3 TEST SETUP 17

4.4 EUT OPERATING CONDITIONS 18

4.5 FIELD STRENGTH CALCULATION 18

4.6 FIELD STRENGTH OF FUNDAMENTAL EMISSIONS 18

4.6 TEST RESULTS 19

5. 20DB BANDWIDTH TEST **24**

5.1 LIMIT 24

Table of Contents

5.2 TEST SETUP 24
5.3 EUT OPERATION CONDITIONS 24
5.4 TEST RESULTS 25
6. DUTY CYCLE 26
6.1 TEST PROCEDURE 26
6.2 TEST SETUP 26
6.3 EUT OPERATION CONDITIONS 26
6.4 TEST RESULTS 27
7. AUTOMATICALLY DEACTIVATE 28
7.1 STANDARD REQUIREMENT 28
7.2 TEST PROCEDURE 28
7.3 TEST SETUP 28
7.4 TEST RESULTS 28
8. ANTENNA REQUIREMENT 29
8.1 STANDARD REQUIREMENT 29
9. TEST SETUP PHOTOGRAPHS 30
10. EXTERNAL AND INTERNAL PHOTOS OF THE EUT 30

REVISION HISTORY

Rev.	Issue Date	Revisions	Contents
A0	2024.12.18	Initial Release	Terry Yang

1. SUMMARY OF TEST RESULTS

Test procedures according to the technical standards:

FCC Part 15.231,Subpart C			
Standard Section	Test Item	Judgment	Remark
15.207	Conducted Emission	N/A	--
15.209/ 15.231.(b)	Radiated Spurious Emission	PASS	--
15.231.(b)	Field Strength of Fundamental Emissions	PASS	--
15.231(a)(1)	Transmission requirement	PASS	--
15.231(C)	20dB&99% Bandwidth	PASS	--
15.203	Antenna Requirement	PASS	--
15.35	Duty Cycle	PASS	--

NOTE:

(1) 'N/A' denotes test is not applicable in this Test Report.

(2)All tests are according to ANSI C63.10-2020.

2. GENERAL INFORMATION

2.1 APPLICANT

Name	:	Foshan Microcore Electronics Technology Co.,Ltd
Address	:	No.401, Building 1, Shiyou Industrial City, Jun'an Town, Shunde.Foshan,Guangdong, China

2.2 MANUFACTURER

Name	:	Foshan Microcore Electronics Technology Co.,Ltd
Address	:	No.401, Building 1, Shiyou Industrial City, Jun'an Town, Shunde.Foshan,Guangdong, China

2.3 FACTORY

Name	:	Foshan Microcore Electronics Technology Co.,Ltd
Address	:	No.401, Building 1, Shiyou Industrial City, Jun'an Town, Shunde.Foshan,Guangdong, China

2.4 GENERAL DESCRIPTION OF THE EUT

Product Name	Wireless Shower Water Temperature Monitor
Trade Name	N/A
Model Name	MX08
Series Model	MX07
Model Difference	Appearance color is different
Frequency band	433.9MHz
Power supply	DC5V
Modulation Type	ASK
Antenna type:	Wire antenna
Antenna gain:	0dBi
Hardware version number	V1.0
Software version number	V1.0

Note:
For a more detailed features description, please refer to the manufacturer's specifications or the User Manual.

2.5 ENVIRONMENTAL CONDITIONS

During the measurement the environmental conditions were within the listed ranges:

Temperature	Normal Temperature:	25°C
Voltage	Normal Voltage	DC 5V
Other	Relative Humidity	55 %
	Air Pressure	101 kPa

2.6 DESCRIPTION OF THE TEST MODES

For Conducted test items and radiated spurious emissions
Each of these EUT operation mode(s) or test configuration mode(s) mentioned below was evaluated respectively.

Pretest Mode	Description
Mode 1	TX Mode

Note:
For the test results, the EUT had been tested with all conditions, but only the worst case was shown in test report.

2.7 BLOCK DIAGRAM SHOWING THE CONFIGURATION OF SYSTEM TESTED

During test, Keep EUT is in continuous transmission mode.

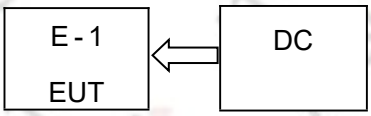

2.8 DESCRIPTION OF NECESSARY ACCESSORIES AND SUPPORT UNITS

The EUT has been tested as an independent unit together with other necessary accessories or support units. The following support units or accessories were used to form a representative test configuration during the tests.

Necessary accessories

Item	Equipment	Mfr/Brand	Model/Type No.	Length	Note
N/A	N/A	N/A	N/A	N/A	N/A

Support units

Item	Equipment	Mfr/Brand	Model	Type No.	Note
N/A	N/A	N/A	N/A	N/A	N/A

Note:

(1) The support equipment was authorized by Declaration of Confirmation.
(2) For detachable type I/O cable should be specified the length in cm in 『Length』 column.

2.9 LABORATORY INFORMATION

Company Name:	Shanghai ATBL Technology Co., Ltd.
Address:	Building 8, No. 160, Basheng Road, Waigaoqiao Free Trade Zone, Pudong New Area, Shanghai
Telephone:	+86(0)21-51298625

2.10 MEASUREMENT UNCERTAINTY

The reported uncertainty of measurement **y ±U**, where expended uncertainty **U** is based on a standard uncertainty multiplied by a coverage factor of **k=2**, providing a level of confidence of approximately **95** %.

No.	Item	Uncertainty
1	RF output power, conducted	±0.68dB
2	Unwanted Emissions, conducted	±2.988dB
3	All emissions, radiated 9K-30MHz	±2.84dB
4	All emissions, radiated 30M- 1GHz	±4.39dB
5	All emissions, radiated 1G-6GHz	±5.10dB
6	All emissions, radiated>6G	±5.48dB
7	Conducted Emission (9kHz- 150kHz)	±2.79dB
8	Conducted Emission (150kHz-30MHz)	±2.80dB

2.11 EQUIPMENTS LIST

2.11.1 Radiation Test equipment

kind of Equipment	Manufacturer	Type No.	Serial No.	Management number	Calibrated until
Test Receiver	R&S	ESCI	100469	SHATBL-E003	2025.05.08
Spectrum Analyzer	Agilent	N9020A	MY50200811	SHATBL-E017	2025.05.08
Loop Antenna	Daze	ZN30900C	20077	SHATBL-E042	2025.05.08
Bilog Antenna	SCHWARZBECk	VLUB 9168	01174	SHATBL-E008	2025.05.08
Horn Antenna	SCHWARZBECk	BBHA 9120D	02014	SHATBL-E009	2025.05.08
Pre-Amplifier (0.1M-3GHz)	JPT	JPA-10M1G35	21010100035001	SHATBL-E005	2025.05.08
Pre-Amplifier (1G-18GHz)	JPT	JPA0118-55-303A	1910001800055000	SHATBL-E006	2025.05.08
Temperature & Humidity	DeLi	DeLi	N/A	SHATBL-E016	2025.09.18
Antenna/Turntable Controller	Brilliant	N/A	N/A	SHATBL-E007	N/A
Test SW	FALA	EMC-RI(Ver.4A2)		SHATBL-E046	N/A

2.11.2 Conduction Test equipment

kind of Equipment	Manufacturer	Type No.	Serial No.	Management number	Calibration date
Test Receiver	R&S	ESPI	101679	SHATBL-E012	2025.05.08
LISN	R&S	ENV216	101300	SHATBL-E013	2025.05.08
LISN	R&S	ENV216	100333	SHATBL-E041	2025.05.08
Temperature & Humidity	DeLi	DeLi	N/A	SHATBL-E015	2025.09.18
Test SW	FALA	EZ-EMC(Ver.EMC-CON3A1.1)		SHATBL-E044	N/A

3. CONDUCTED EMISSION MEASUREMENT

3.1 POWER LINE CONDUCTED EMISSION LIMITS

The radio frequency voltage that is conducted back onto the AC power line on any frequency or frequencies, within the band 150 kHz to 30 MHz, shall not exceed the limits in the following table .

FREQUENCY (MHz)	Class B (dBuV)		Standard
	Quasi- peak	Average	
0.15 -0.5	66 - 56 *	56 - 46 *	15.207
0.50 -5.0	56.00	46.00	15.207
5.0 -30.0	60.00	50.00	15.207

Note:

(1) The tighter limit applies at the band edges.

(2) The limit of " * " marked band means the limitation decreases linearly with the logarithm of the frequency in the range.

The following table is the setting of the receiver

Receiver Parameters	Setting
Attenuation	10 dB
Start Frequency	0.15 MHz
Stop Frequency	30 MHz
IF Bandwidth	9 kHz

3.2 TEST PROCEDURE

a. The EUT is 0.8 m from the horizontal ground plane and 0.4 m from the vertical ground plane with EUT being connected to the power mains through a line impedance stabilization network (LISN). All other support equipment are powered from additional LISN(s). The LISN provides 50 Ohm/ 50uH of coupling impedance for the measuring instrument.

b. Interconnecting cables that hang closer than 40 cm to the ground plane shall be folded back and forth in the center forming a bundle 30 to 40 cm long.

c. I/O cables that are not connected to a peripheral shall be bundled in the center. The end of the cable may be terminated, if required, using the correct terminating impedance. The overall length shall not exceed 1 m.

d. LISN is at least 80 cm from the nearest part of EUT chassis.

e. For the actual test configuration, please refer to the related Item –EUT Test Photos.

3.3 TEST SETUP

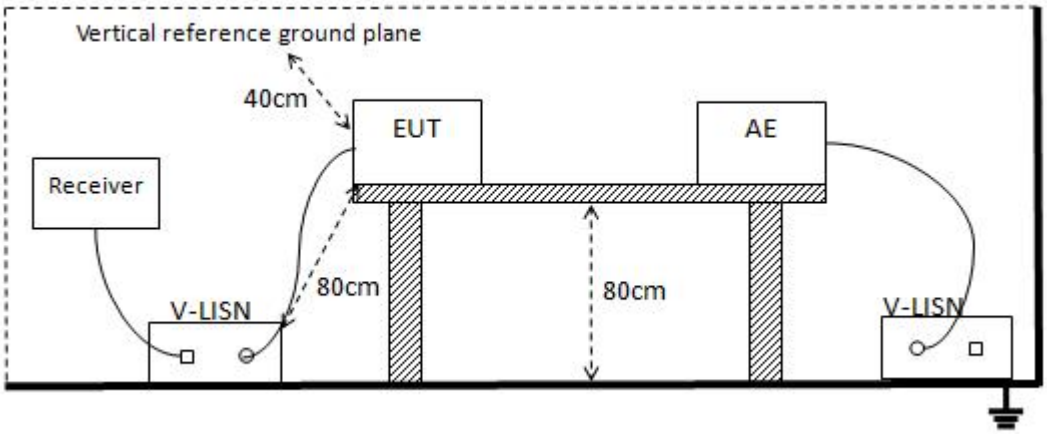

3.4 EUT OPERATING CONDITIONS

The EUT was configured for testing in a typical fashion (as a customer would normally use it). The EUT has been programmed to continuously transmit during test. This operating condition was tested and used to collect the included data.

3.5 TEST RESULTS

This test item is not applicable , the product has no power port.

4. FIELD STRENGTH OF FUNDAMENTAL EMISSIONS ANDRADIATED EMISSION MEASUREMENT

4.1 RADIATED EMISSION LIMITS

In case the emission fall within the restricted band specified on Part 15.205(a), then the Part 15.209(a)and Part 15.231(b) limit in the table below has to be followed.

FREQUENCIES (MHz)	FIELD STRENGTH (microvolts/meter)	MEASUREMENT DISTANCE (meters)
0.009 ~ 0.490	2400/F(kHz)	300
0.490 ~ 1.705	24000/F(kHz)	30
1.705 ~ 30.0	30	30
30 ~ 88	100	3
88 ~ 216	150	3
216 ~ 960	200	3
Above 960	500	3

According to §15.231(b), the field strength of emissions from intentional radiators operated within these frequency bands shall comply with the following:

Fundamental frequency (MHz)	Field strength of fundamental (microvolts/meter)	Field strength of spurious emission (microvolts/meter)
40.66–40.70	2,250	225
70–130	1,250	125
130–174	11,250 to 3,750	1125 to 375
174–260	3,750	375
260–470	13,750 to 12,500	1375 to 1,250
Above 470	12,500	1,250

NOTE:

1. 1 Linear interpolations.
2. The lower limit shall apply at the transition frequencies.
3. Emission level (dBuV/m) = 20 log Emission level (uV/m).
4. As shown in 15.35(b), for frequencies above 1000MHz, the field strength limits are based on average detector, however, the peak field strength of any emission shall not exceed the maximum permitted average limits, specified above by more than 20dB under any condition of modulation.

LIMITS OF RESTRICTED FREQUENCY BANDS

FREQUENCY (MHz)	FREQUENCY (MHz)	FREQUENCY (MHz)	FREQUENCY (GHz)
0.090-0.110	16.42-16.423	399.9-410	4.5-5.15
0.495-0.505	16.69475-16.69525	608-614	5.35-5.46
2.1735-2.1905	16.80425-16.80475	960-1240	7.25-7.75
4.125-4.128	25.5-25.67	1300-1427	8.025-8.5
4.17725-4.17775	37.5-38.25	1435-1626.5	9.0-9.2
4.20725-4.20775	73-74.6	1645.5-1646.5	9.3-9.5
6.215-6.218	74.8-75.2	1660-1710	10.6-12.7
6.26775-6.26825	108-121.94	1718.8-1722.2	13.25-13.4
6.31175-6.31225	123-138	2200-2300	14.47-14.5
8.291-8.294	149.9-150.05	2310-2390	15.35-16.2
8.362-8.366	156.52475-156.52525	2483.5-2500	17.7-21.4
8.37625-8.38675	156.7-156.9	2690-2900	22.01-23.12
8.41425-8.41475	162.0125-167.17	3260-3267	23.6-24.0
12.29-12.293	167.72-173.2	3332-3339	31.2-31.8
12.51975-12.52025	240-285	3345.8-3358	36.43-36.5
12.57675-12.57725	322-335.4	3600-4400	Above 38.6
13.36-13.41			

Spectrum Parameter	Setting
Detector	Peak
Attenuation	Auto
Start Frequency	1000 MHz
Stop Frequency	10th carrier harmonic
RB / VB (emission in restricted band)	1MHz / 3MHz

Receiver Parameter	Setting
Attenuation	Auto
Start ~ Stop Frequency	9kHz~90kHz / RB 200Hz for PK & AV
Start ~ Stop Frequency	90kHz~110kHz / RB 200Hz for QP
Start ~ Stop Frequency	110kHz~490kHz / RB 200Hz for PK & AV
Start ~ Stop Frequency	490kHz~30MHz / RB 9kHz for QP
Start ~ Stop Frequency	30MHz~1000MHz / RB 120kHz for QP

4.2 TEST PROCEDURE

a. The measuring distance of at 3 m shall be used for measurements at frequency 0.009MHz up to 1GHz,and above 1GHz.
b. The EUT was placed on the top of a rotating table 0.8 meters(above 1GHz is 1.5 m) above the ground at a 3 meter anechoic chamber. The table was rotated 360 degrees to determine the position of the highest radiation.
c. The height of the equipment shall be 0.8 m(above 1GHz is 1.5 m); the height of the test antenna shall vary between 1 m to 4 m. Horizontal and vertical polarization of the antenna are set to make the measurement.
d. The initial step in collecting conducted emission data is a spectrum analyzer peak detector mode pre-scanning the measurement frequency range. Significant peaks are then marked and then Quasi Peak detector mode re-measured.
e. If the Peak Mode measured value compliance with and lower than Quasi Peak Mode Limit, the EUT shall be deemed to meet QP Limits and then no additional QP Mode measurement performed.
f. For the actual test configuration, please refer to the related Item –EUT Test Photos.

Note:

Both horizontal and vertical antenna polarities were tested and performed pretest to three orthogonal axis. The worst case emissions were reported.

4.3 TEST SETUP

(A) Radiated Emission Test-Up Frequency Below 30MHz

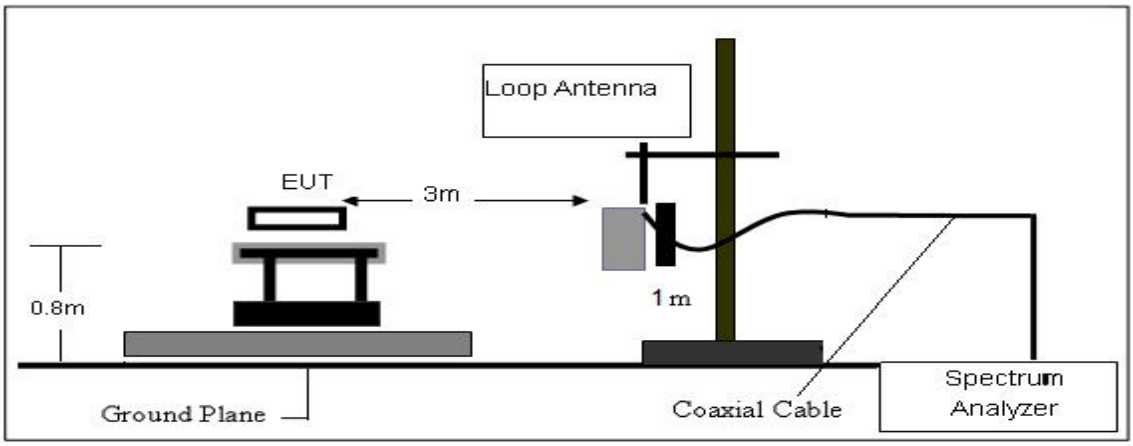

(B) Radiated Emission Test-Up Frequency 30MHz~1GHz

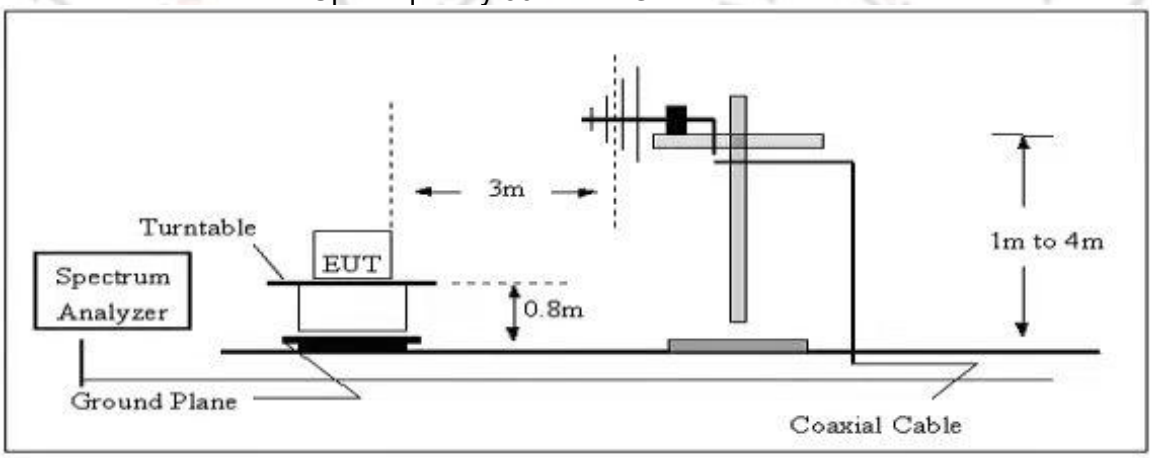

(C) Radiated Emission Test-Up Frequency Above 1GHz

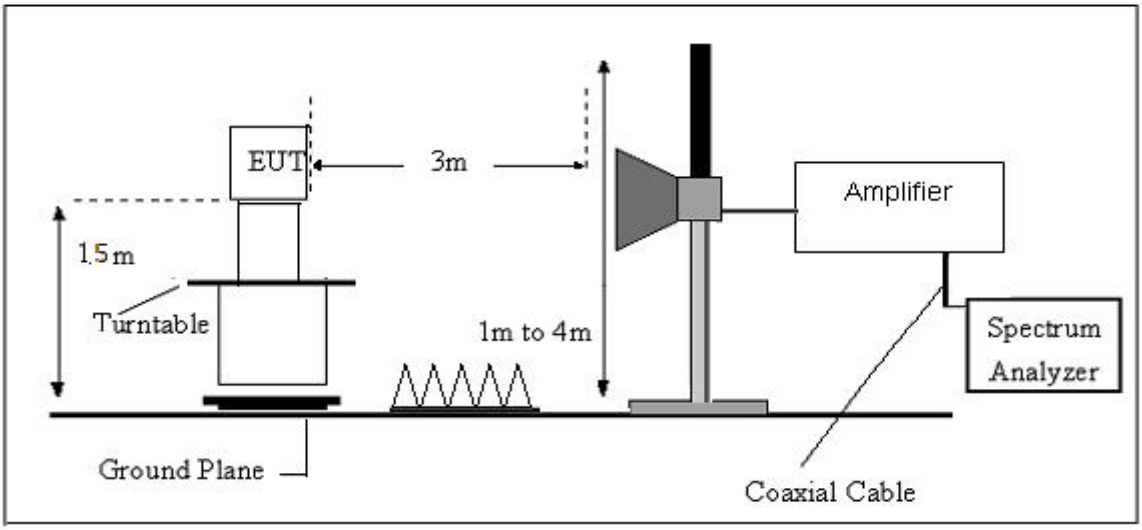

4.4 EUT OPERATING CONDITIONS

The EUT tested system was configured as the statements of 2.3 Unless otherwise a special operating condition is specified in the follows during the testing.

4.5 FIELD STRENGTH CALCULATION

The field strength is calculated by adding the Antenna Factor and Cable Factor and subtracting the Amplifier Gain and Duty Cycle Correction Factor (if any) from the measured reading. The basic equation with a sample calculation is as follows:

FS = RA + AF + CL - AG

Where

FS = Field Strength

CL = Cable Attenuation Factor (Cable Loss)

RA = Reading Amplitude

AG = Amplifier Gain

AF = Antenna Factor

Factor=AF+CL-AG

4.6 FIELD STRENGTH OF FUNDAMENTAL EMISSIONS

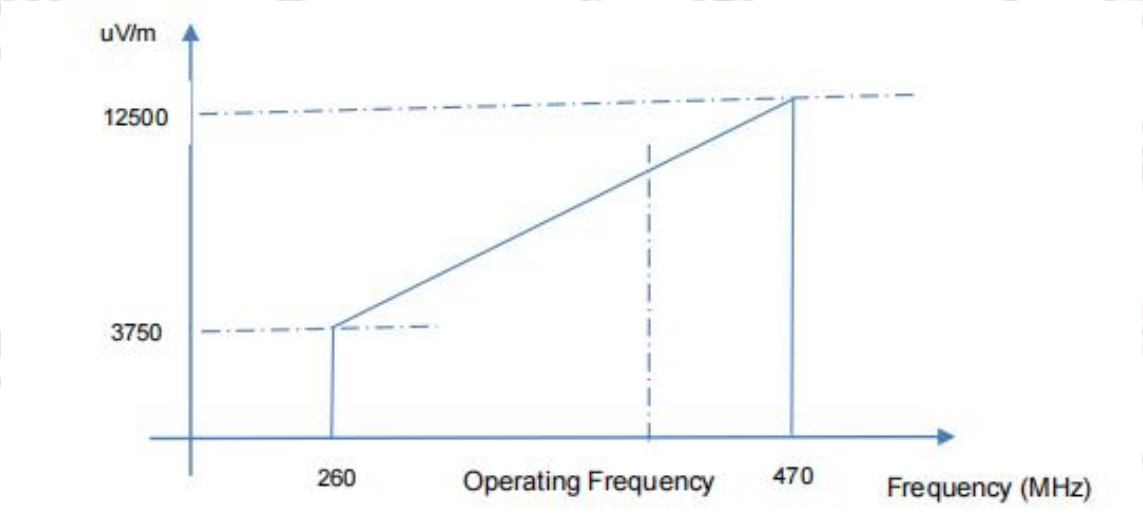

The Field Strength of Fundamental Emissions (Operating Frequency) is:

3750 uV/m = 20*log (3750) dBuV/m = 71.48 dBuV/m

12500 uV/m = 20*log (12500) dBuV/m = 81.94 dBuV/m

4.6 TEST RESULTS

Field Strength of Fundamental Emissions and Field strength of spurious emissions Value					
Operating Frequency (MHz)	Field Strength (dBuV/m)	Detector	Limit @3m (dBuV/m)	Margin (dB)	Antenna
433.9	47.60	Peak	100.8	-53.2	Horizontal
	47.55	Peak	100.8	-53.25	Vertical
867.83	27.60	Peak	80.8	-53.2	Horizontal
	28.44	Peak	80.8	-52.36	Vertical
433.9	29.27	Avg	80.8	-51.53	Horizontal
	29.22	Avg	80.8	-51.58	Vertical
867.83	9.27	Avg	60.8	-51.53	Horizontal
	10.11	Avg	60.8	-50.69	Vertical

(Radiated Emission<30MHz (9kHz-30MHz, H-field))

Temperature:	25℃	Relative Humidity	55%RH
Test Voltage:	DC5V	Polarization:	N/A
Test Mode:	TX Mode		

Note:
1.The amplitude of spurious emissions which are attenuated by more than 20dB below the permissible value has no need to be reported.
2.Distance extrapolation factor =40 log (specific distance/test distance)(dB);
Limit line = specific limits(dBuv) + distance extrapolation factor.
3. The verdict please refer to the A.6 field strength of fundamental emissions and field strength of spurious emissions value.
4.Limit field strength of fundamental: 20*log((12500-3750)/(470-260)+(fc-260)+3750)dBuV/m+20dB =100.8dBuV/m@3m (PK).
5. Limit field strength of harmonics: 20*log((1250-375)/(470-260)+(fc-260)+375)dBuV/m+20dB =80.8dBuV/m@3m (PK).

(30MHz -1000MHz)

Temperature:	25℃	Relative Humidity:	55%RH
Test Voltage:	DC5V	Phase:	Horizontal
Test Mode:	TX Mode		

Remark:
1. Margin = Result (Result =Reading + Factor)–Limit

Antenna Horizontal

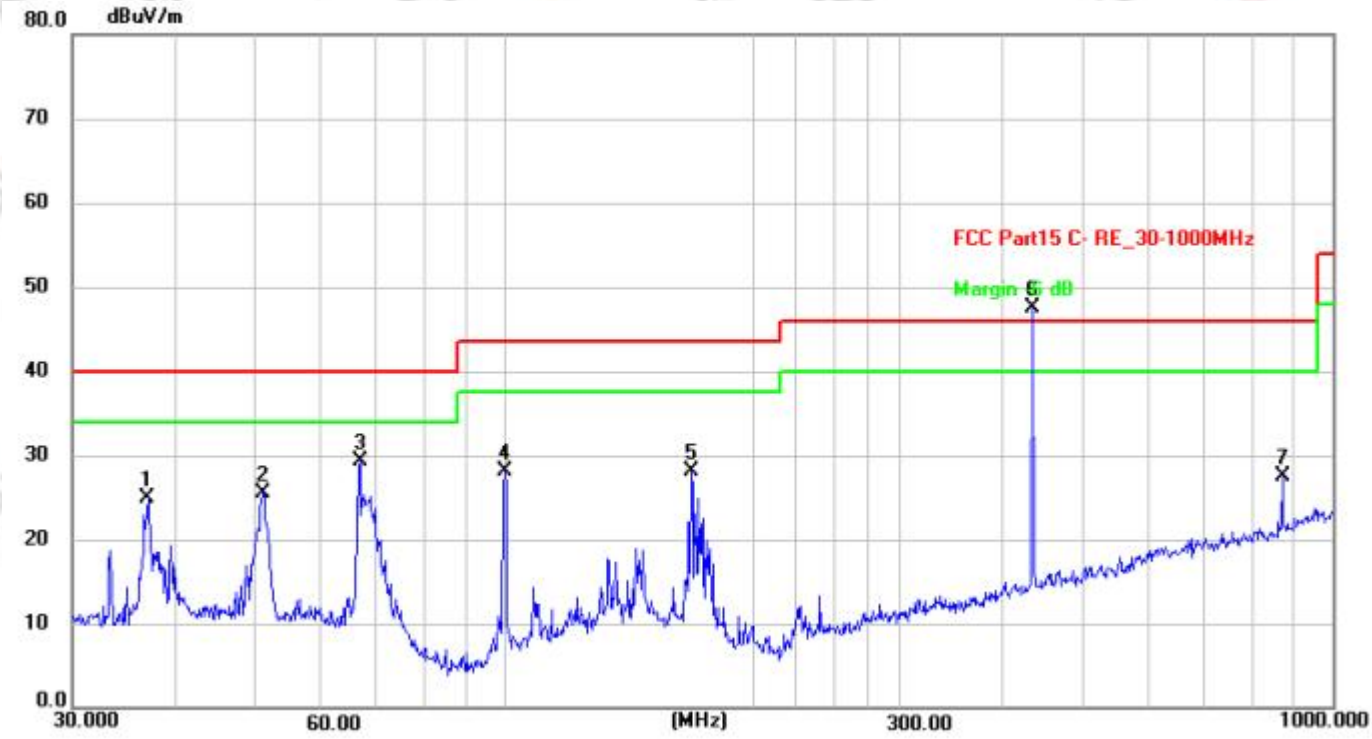

No.	Frequency (MHz)	Reading (dBuV)	Factor (dB/m)	Level (dBuV/m)	Limit (dBuV/m)	Margin (dB)	Detector
1	37.0248	54.42	-29.49	24.93	40.00	-15.07	peak
2	50.9420	54.51	-28.99	25.52	40.00	-14.48	peak
3	66.7325	59.80	-30.48	29.32	40.00	-10.68	peak
4	99.8777	61.57	-33.56	28.01	43.50	-15.49	peak
5	167.8243	57.69	-29.59	28.10	43.50	-15.40	peak
6 *	433.9051	72.53	-24.93	47.60	100.8	-53.20	peak
7	867.830	44.50	-16.90	27.60	80.80	-53.20	peak

Temperature:	25℃	Relative Humidity:	55%RH
Test Voltage:	DC5V	Phase:	Horizontal
Test Mode:	TX Mode		

Remark:
1. Margin = Result (Result =Reading + Factor)–Limit

Antenna Vertical

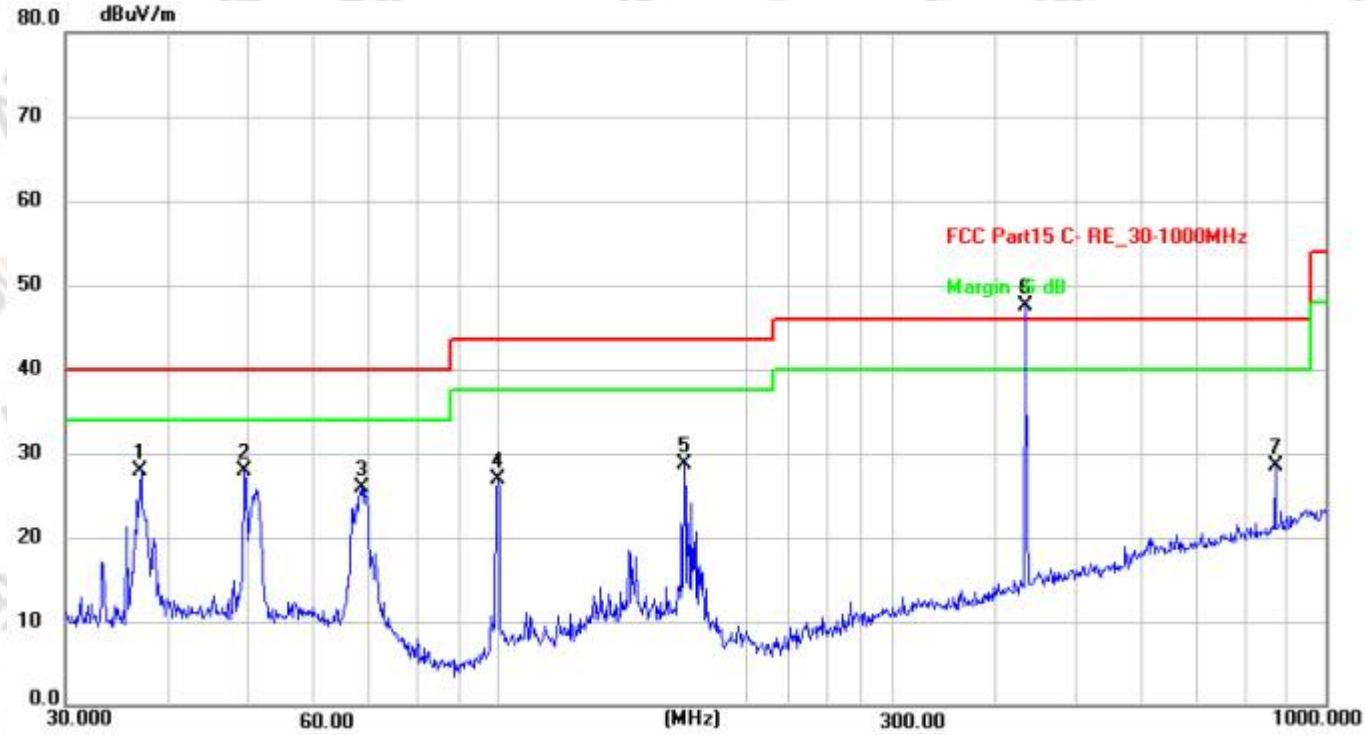

No.	Frequency (MHz)	Reading (dBuV)	Factor (dB/m)	Level (dBuV/m)	Limit (dBuV/m)	Margin (dB)	Detector
1	37.0248	57.30	-29.49	27.81	40.00	-12.19	peak
2	49.3594	56.97	-28.97	28.00	40.00	-12.00	peak
3	68.3908	56.71	-30.77	25.94	40.00	-14.06	peak
4	99.8777	60.51	-33.56	26.95	43.50	-16.55	peak
5	167.8243	58.31	-29.59	28.72	43.50	-14.78	peak
6 *	433.901	72.48	-24.93	47.55	100.80	-53.25	peak
7	867.830	45.34	-16.90	28.44	80.80	-52.36	peak

(1000MHz -6000MHz)

Temperature:	25℃	Relative Humidity:	55%RH
Test Voltage:	DC 5V	Phase:	Horizontal
Test Mode:	TX Mode		

Remark:
1. Margin = Result (Result =Reading + Factor)–Limit

Antenna Horizontal

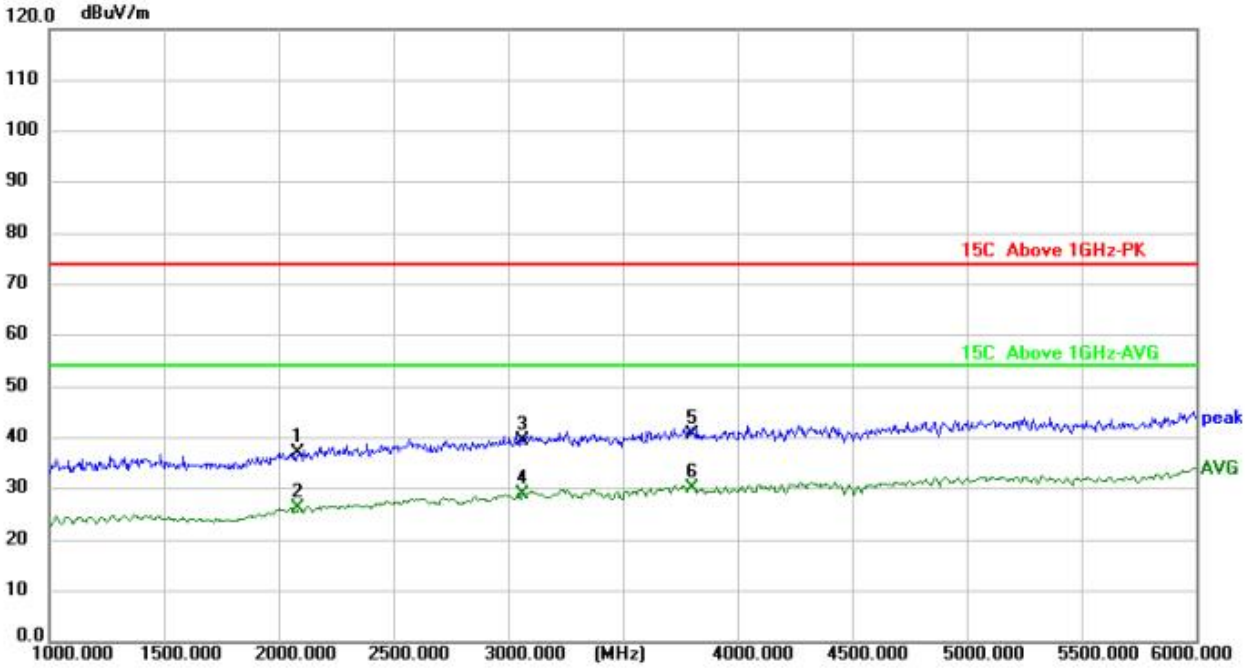

No.	Frequency (MHz)	Reading (dBuV)	Factor (dB/m)	Level (dBuV/m)	Limit (dBuV/m)	Margin (dB)	Detector
1	2088.000	54.05	-16.86	37.19	74.00	-36.81	peak
2	2088.000	43.02	-16.86	26.16	54.00	-27.84	AVG
3	3064.000	51.78	-12.22	39.56	74.00	-34.44	peak
4	3064.000	41.13	-12.22	28.91	54.00	-25.09	AVG
5	3808.000	49.89	-9.38	40.51	74.00	-33.49	peak
6 *	3808.000	39.42	-9.38	30.04	54.00	-23.96	AVG

Temperature:	25℃	Relative Humidity:	55%RH
Test Voltage:	DC 5V	Phase:	Horizontal
Test Mode:	TX Mode		

Remark:
1. Margin = Result (Result =Reading + Factor)–Limit

Antenna Vertical

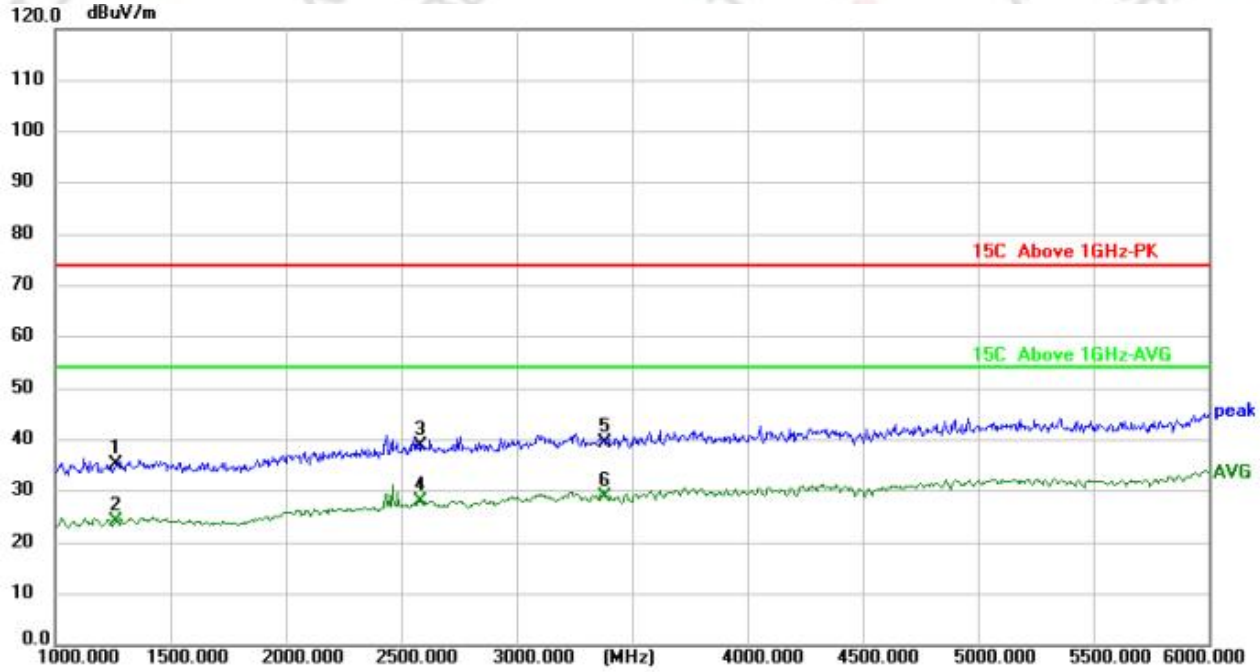

No.	Frequency (MHz)	Reading (dBuV)	Factor (dB/m)	Level (dBuV/m)	Limit (dBuV/m)	Margin (dB)	Detector
1	1260.000	55.50	-20.16	35.34	74.00	-38.66	peak
2	1260.000	44.23	-20.16	24.07	54.00	-29.93	AVG
3	2580.000	53.62	-14.65	38.97	74.00	-35.03	peak
4	2580.000	42.65	-14.65	28.00	54.00	-26.00	AVG
5	3388.000	51.17	-11.83	39.34	74.00	-34.66	peak
6 *	3388.000	40.89	-11.83	29.06	54.00	-24.94	AVG

5. 20DB BANDWIDTH TEST

5.1 LIMIT

FCC Part15.231,Subpart C			
Section	Test Item	Limit	Result
15.231(C)	20 Bandwidth	The 20dB bandwidth of the emissions shall not exceed 0.25% of the center frequency	PASS

Spectrum Parameter	Setting
Attenuation	Auto
Span Frequency	> Measurement Bandwidth
RB	10 kHz (20dB Bandwidth)
VB	30 kHz (20dB Bandwidth)
Detector	Peak
Trace	Max Hold
Sweep Time	Auto

5.2 TEST SETUP

The bandwidth of the emission shall be no wider than 0.25% of the center frequency for devices operating above 70 MHz and below 900 MHz. For devices operating above 900 MHz, the emission shall be no wider than 0.5% of the center frequency. Bandwidth is determined at the points 20 dB down from the modulated carrier.

5.3 EUT OPERATION CONDITIONS

TX mode.

5.4 TEST RESULTS

Centre Frequency (MHz)	20dB Bandwidth (kHz)	99%Bandwidth (kHz)	Limit(kHz)	Verdict
433.90	55.20	124.55	1084.75	Pass

Test figure

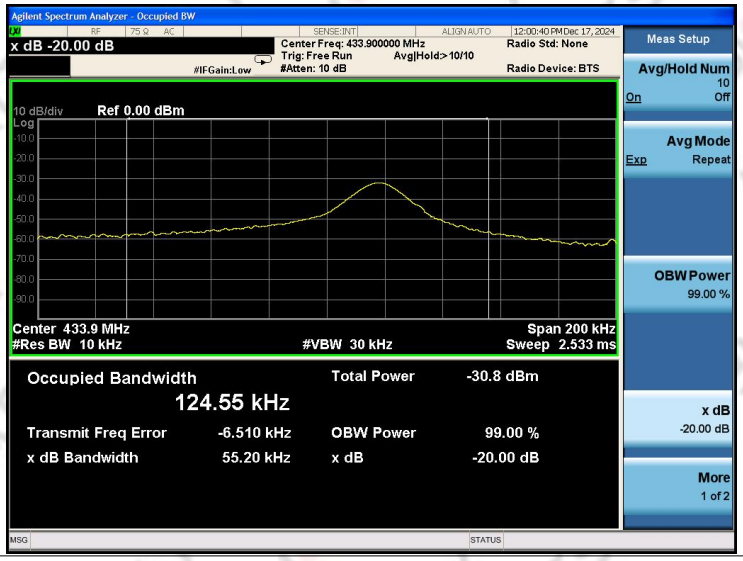

6. DUTY CYCLE

6.1 TEST PROCEDURE

The EUT was directly connected to the spectrum analyzer and antenna output port as show in the block diagram below.

The Duty Cycle Was Determined By The Following Equation: To Calculate The Actual Field Intensity,The Duty Cycle Correction Factor In Decibel Is Needed For Later Use And Can Be Obtained From Following Conversion

Duty Cycle(%)=Total On Interval In A Complete Pulse Train/ Length Of A Complete Pulse Train * %

Duty Cycle Correction Factor(Db)=20 * Log10(Duty Cycle(%)

6.2 TEST SETUP

6.3 EUT OPERATION CONDITIONS

TX mode.

6.4 TEST RESULTS

FCC Part 15.231	
433.9MHz	
Duty Cycle Correction Factor(dB)	20*Log(0.3227/1.319)=-12.23dB
Test figure	

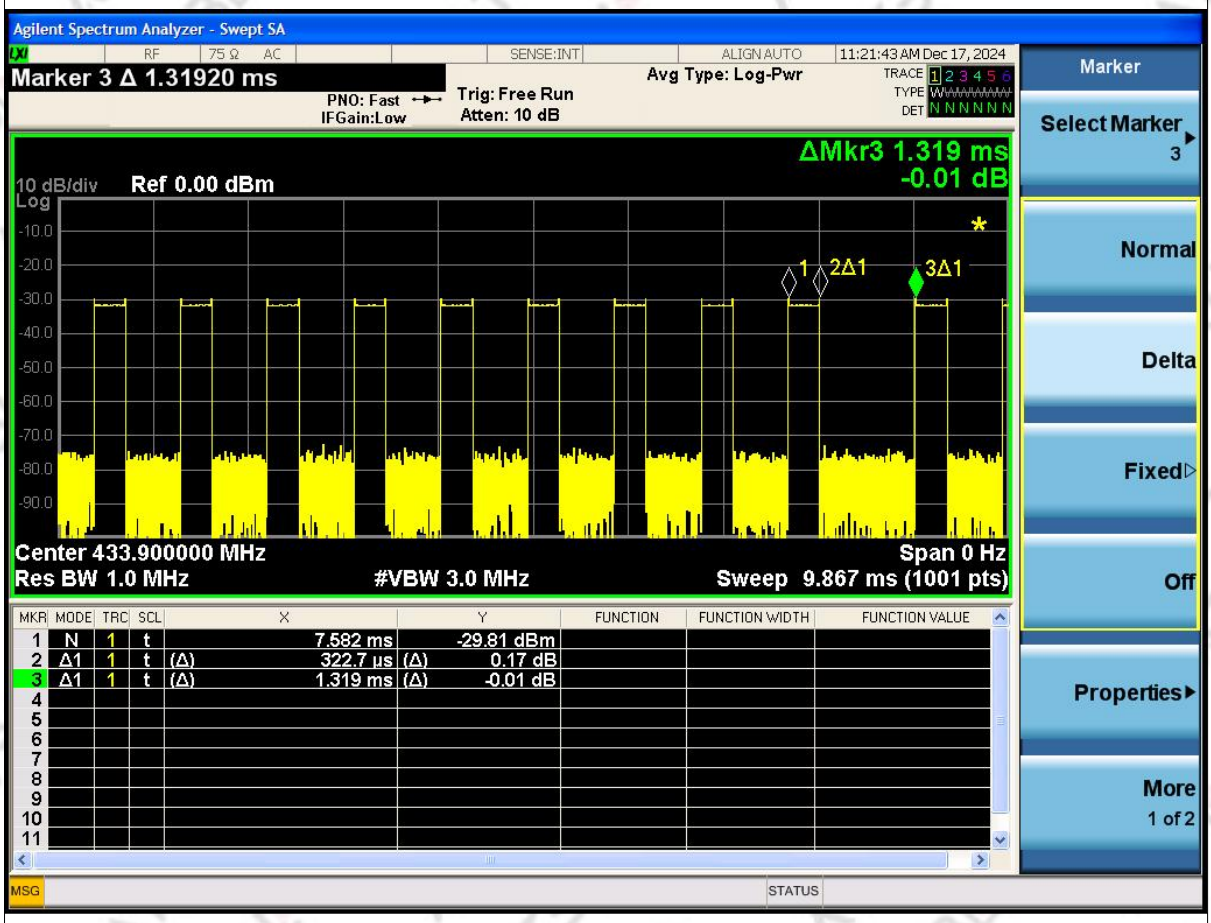

7. AUTOMATICALLY DEACTIVATE

7.1 STANDARD REQUIREMENT

A manually operated transmitter shall employ a switch that will automatically deactivate the transmitter within not more than 5 seconds of being released.

7.2 TEST PROCEDURE

The EUT was directly connected to the spectrum analyzer and antenna output port as show in the block diagram below.
Spectrum Setting: RBW= 1MHz, VBW=3MHz.
Set the EUT to transmit by manually operated. Use the “View” function of SPA to find the transmission time of being released.

7.3 TEST SETUP

7.4 TEST RESULTS

433.9MHz		
Activation time	Limit(Sec)	Result
0.032s	5 s	Pass

Test figure

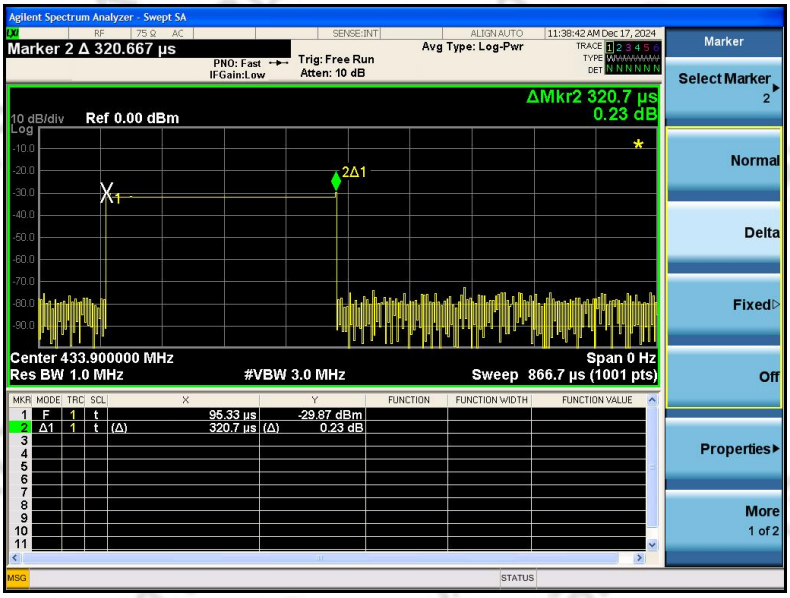

8. ANTENNA REQUIREMENT

8.1 STANDARD REQUIREMENT

FCC Part 15 Paragraph 15.203, an intentional radiator shall be designed to ensure that no antenna other than that furnished by the responsible party shall be used with the device. The use of a permanently attached antenna to the intentional radiator shall be considered sufficient to comply with the provisions of this section.

8.2 EUT ANTENNA

The EUT antenna is wire Antenna.It conforms to the standard requirements.

9. TEST SETUP PHOTOGRAPHS

Please refer to the Appendix F.

10. EXTERNAL AND INTERNAL PHOTOS OF THE EUT

Please refer to Annex G for EUT photos

※※※※※END OF THE REPORT※※※※※