RF Test Report

FCC ID: 2BMR3-DC420

Test Report No……..:	RF240911007-01-004
Product(s) Name……...:	MINI PC
Model(s)……..:	DC420, DC520, DC530, DC540, X1800M, X1900M, X2840M, X4010M, X4125M, X5095M, X59130M, X59140M, X53130M, X53140M, X55130M, X55140M, X57130M, X57140M, X8100M, X8300M, X8350M, X8400M, X8500M, X8600M, X8700M, X9100M, X9300M, X9350M, X9400M, X9500M, X9600M, X9700M, X9900M, X5380M, X5390M, X53100M, X53110M, X53120M, X5580M, X5590M, X55100M, X55110M, X55120M, X5780M, X5790M, X57100M, X57110M, X57120M, X5980M, X5990M, X59100M, X59110M, X59120M
Trade Mark……...:	N/A
Applicant……..:	Shenzhen Share Technology Co.,Ltd
Address……..…...:	Room301-302 ChuangZhao Industrial Park NO.49 Ziheng West Rd Kengzi Town Pingshan New Area, Shenzhen
Receipt Date……..:	2024.12.18
Test Date……...:	2024.12.19~2024.12.30
Issued Date……..:	2024.12.30
Standards……..:	47 CFR FCC Part 15, Subpart C(Section 15.247) ANSI C63.10:2013
Testing Laboratory……:	Shenzhen Haiyun Standard Technical Co., Ltd.

Prepared By:	Checked By:	Approved By:	
Jason Huang	Black Ding	Tim Zhang	
Jason huang	Black Ding	Tim.zhang	

Table of Contents

1 . SUMMARY OF TEST RESULTS 6

1.1 TEST FACILITY 7

1.2 MEASUREMENT UNCERTAINTY 7

1.3 TEST ENVIRONMENT CONDITIONS 7

2 . GENERAL INFORMATION 8

2.1 GENERAL DESCRIPTION OF EUT 8

2.2 DESCRIPTION OF TEST MODES 10

2.3 PARAMETERS OF TEST SOFTWARE 11

2.4 SUPPORT UNITS 11

3 . AC POWER LINE CONDUCTED EMISSIONS 12

3.1 LIMIT 12

3.2 TEST PROCEDURE 12

3.3 DEVIATION FROM TEST STANDARD 12

3.4 TEST SETUP 13

3.5 EUT OPERATING CONDITIONS 13

3.6 TEST RESULTS 13

4 . RADIATED EMISSIONS 14

4.1 LIMIT 14

4.2 TEST PROCEDURE 15

4.3 DEVIATION FROM TEST STANDARD 16

4.4 TEST SETUP 16

4.5 EUT OPERATING CONDITIONS 17

4.6 TEST RESULTS - 9 KHZ TO 30 MHZ 17

4.7 TEST RESULTS - 30 MHZ TO 1000 MHZ 17

4.8 TEST RESULTS - ABOVE 1000 MHZ 17

5 . NUMBER OF HOPPING FREQUENCY 18

5.1 LIMIT 18

5.2 TEST PROCEDURE 18

5.3 DEVIATION FROM STANDARD 18

5.4 TEST SETUP 18

5.5 EUT OPERATION CONDITIONS 18

5.6 TEST RESULTS 18

6 . AVERAGE TIME OF OCCUPANCY 19

6.1 LIMIT 19

6.2 TEST PROCEDURE 19
6.3 DEVIATION FROM STANDARD 19
6.4 TEST SETUP 19
6.5 EUT OPERATION CONDITIONS 19
6.6 TEST RESULTS 19
7 . HOPPING CHANNEL SEPARATION 20
7.1 LIMIT 20
7.2 TEST PROCEDURE 20
7.3 DEVIATION FROM STANDARD 20
7.4 TEST SETUP 20
7.5 EUT OPERATION CONDITIONS 20
7.6 TEST RESULTS 20
8 . BANDWIDTH 21
8.1 LIMIT 21
8.2 TEST PROCEDURE 21
8.3 DEVIATION FROM STANDARD 21
8.4 TEST SETUP 21
8.5 EUT OPERATION CONDITIONS 21
8.6 TEST RESULTS 21
9 . MAXIMUM OUTPUT POWER 22
9.1 LIMIT 22
9.2 TEST PROCEDURE 22
9.3 DEVIATION FROM STANDARD 22
9.4 TEST SETUP 22
9.5 EUT OPERATION CONDITIONS 22
9.6 TEST RESULTS 22
10 . CONDUCTED SPURIOUS EMISSION 23
10.1 LIMIT 23
10.2 TEST PROCEDURE 23
10.3 DEVIATION FROM STANDARD 23
10.4 TEST SETUP 23
10.5 EUT OPERATION CONDITIONS 23
10.6 TEST RESULTS 23
11 . MEASUREMENT INSTRUMENTS LIST 24
12 . ANTENNA REQUIREMENT 25

APPENDIX A - AC POWER LINE CONDUCTED EMISSIONS 26
APPENDIX B - RADIATED EMISSION - 9 KHZ TO 30 MHZ 29
APPENDIX C - RADIATED EMISSION - 30 MHZ TO 1000 MHZ 30
APPENDIX D - RADIATED EMISSION - ABOVE 1000 MHZ 33
APPENDIX E - NUMBER OF HOPPING FREQUENCY 39
APPENDIX F - AVERAGE TIME OF OCCUPANCY 42
APPENDIX G - HOPPING CHANNEL SEPARATION 53
APPENDIX H - BANDWIDTH 56
APPENDIX I - MAXIMUM OUTPUT POWER 67
APPENDIX J - CONDUCTED SPURIOUS EMISSION 73
APPENDIX K - DECLARATION FOR BLUETOOTH DEVICE 94

HISTORY OF THIS TEST REPORT

Original Report Issue Date: 2024.12.30

● No additional attachment

○ Additional attachments were issued following record

Attachment No.	Issue Date	Description

1.. SUMMARY OF TEST RESULTS

Test procedures according to the technical standard(s):

FCC CFR Title 47, Part 15, Subpart C				
Standard(s) Section	**Test Item**	**Test Result**	**Judgment**	**Remark**
15.207	AC Power Line Conducted Emissions	APPENDIX A	PASS	------
15.247(d) 15.205(a) 15.209(a)	Radiated Emission	APPENDIX B APPENDIX C APPENDIX D	PASS	------
15.247 (a)(1)(iii)	Number of Hopping Frequency	APPENDIX E	PASS	------
15.247 (a)(1)(iii)	Average Time of Occupancy	APPENDIX F	PASS	------
15.247(a)(1)	Hopping Channel Separation	APPENDIX G	PASS	------
15.247(a)(1)	Bandwidth	APPENDIX H	PASS	------
15.247(a)(1)	Maximum Output Power	APPENDIX I	PASS	------
15.247(d)	Conducted Spurious Emission	APPENDIX J	PASS	------
15.203	Antenna Requirement	------	PASS	Note(2)

Note:

(1) “N/A” denotes test is not applicable in this test report

(2) The device what use a RP-SMA antenna interface design was considered sufficient to comply with the provisions of 15.203.

1.1. TEST FACILITY

Company:	Shenzhen Haiyun Standard Technical CO., Ltd.
Address:	No. 110-113, 115, 116, Block B, Jinyuan Business Building, Bao'an District, Shenzhen, China
CNAS Registration Number:	CNAS L18252
CAB identifier:	CN0145
A2LA Certificate Number:	6823.01
Telephone:	0755-26024411

1.2. MEASUREMENT UNCERTAINTY

ISO/IEC 17025 requires that an estimate of the measurement uncertainties associated with the emissions test results be included in the report. The measurement uncertainties given below are based on a 95% confidence level (based on a coverage factor (k=2))

Uncertainty	
Parameter	Uncertainty
Occupied Channel Bandwidth	±102kHz
RF power conducted	±0.377dB
Power Spectral Density	±0.743dB
Conducted Spurious Emission	±1.328dB
Time	±0.19%
Conducted emission(9kHz~30MHz) AC main	±2.68dB
Radiated emission(9kHz~30MHz)	±2.74dB
Radiated emission (30MHz~1GHz)	±4.22dB
Radiated emission (1GHz~18GHz)	±5.06dB
Radiated emission (18GHz~40GHz)	±4.98dB

Note: Unless specifically mentioned, the uncertainty of measurement has not been taken into account to declare the compliance or non-compliance to the specification.

1.3. TEST ENVIRONMENT CONDITIONS

Test Item	Temperature	Humidity	Test Voltage	Tested By
AC Power Line Conducted Emissions	23.3°C	49%	AC 120V/60Hz	Freedom Zhuo
Radiated Emissions-9 kHz to 30 MHz	23.4°C	52%	AC 120V/60Hz	Lemon He
Radiated Emissions-30 MHz to 1000 MHz	23.4°C	52%	AC 120V/60Hz	Lemon He
Radiated Emissions-Above 1000 MHz	23.4°C	52%	AC 120V/60Hz	Lemon He
Bandwidth	23.5°C	52%	DC 12V	Albert Fan
Maximum Output Power	23.5°C	52%	DC 12V	Albert Fan
Conducted Spurious Emission	23.5°C	52%	DC 12V	Albert Fan
Number of Hopping Frequency	23.5°C	52%	DC 12V	Albert Fan
Average Time of Occupancy	23.5°C	52%	DC 12V	Albert Fan
Hopping Channel Separation	23.5°C	52%	DC 12V	Albert Fan

Note: Adapter supply voltage AC 120V/60Hz.

2.. GENERAL INFORMATION

2.1. GENERAL DESCRIPTION OF EUT

Sample No.	POC240911007-S001
Equipment Name	MINI PC
Model Name	DC420, DC520, DC530, DC540, X1800M, X1900M, X2840M, X4010M, X4125M, X5095M, X59130M, X59140M, X53130M, X53140M, X55130M, X55140M, X57130M, X57140M, X8100M, X8300M, X8350M, X8400M, X8500M, X8600M, X8700M, X9100M, X9300M, X9350M, X9400M, X9500M, X9600M, X9700M, X9900M, X5380M, X5390M, X53100M, X53110M, X53120M, X5580M, X5590M, X55100M, X55110M, X55120M, X5780M, X5790M, X57100M, X57110M, X57120M, X5980M, X5990M, X59100M, X59110M, X59120M
Test Model	DC420
Model difference	Only the model name is different
Trade Mark	N/A
Power Supply	DC 12V from adapter
Adapter Information	Model: HKA03612030-7K Input: 100-240V~ 50/60Hz, 1.0A Output: 12V⎓3.0A, 36.0W Manufacturer: Shenzhen Hangjia Chiyuan Electric Co., Ltd.
Operation Frequency	2402 MHz ~ 2480 MHz
Modulation Type	GFSK, π/4-DQPSK, 8DPSK
Bit Rate of Transmitter	1Mbps, 2Mbps, 3Mbps
Max. Output Power	2Mbps: 8.66dBm (0.001W)
Antenna gain	0.82dBi
Antenna type	External Antenna

Note:

1. For a more detailed features description, please refer to the manufacturer’s specifications or the user's manual.

2. Channel List:

Channel	Frequency (MHz)	Channel	Frequency (MHz)	Channel	Frequency (MHz)
00	2402	27	2429	54	2456
01	2403	28	2430	55	2457
02	2404	29	2431	56	2458
03	2405	30	2432	57	2459
04	2406	31	2433	58	2460
05	2407	32	2434	59	2461
06	2408	33	2435	60	2462
07	2409	34	2436	61	2463
08	2410	35	2437	62	2464
09	2411	36	2438	63	2465
10	2412	37	2439	64	2466
11	2413	38	2440	65	2467
12	2414	39	2441	66	2468
13	2415	40	2442	67	2469
14	2416	41	2443	68	2470
15	2417	42	2444	69	2471
16	2418	43	2445	70	2472
17	2419	44	2446	71	2473
18	2420	45	2447	72	2474
19	2421	46	2448	73	2475
20	2422	47	2449	74	2476
21	2423	48	2450	75	2477
22	2424	49	2451	76	2478
23	2425	50	2452	77	2479
24	2426	51	2453	78	2480
25	2427	52	2454		
26	2428	53	2455		

2.2. DESCRIPTION OF TEST MODES

The test system was pre-tested based on the consideration of all possible combinations of EUT operation mode.

Pretest Mode	Description
Mode 1	TX Mode_1Mbps Channel 00/39/78
Mode 2	TX Mode_2Mbps Channel 00/39/78
Mode 3	TX Mode_3Mbps Channel 00/39/78
Mode 4	TX Mode_2Mbps Channel 78

Following mode(s) was (were) found to be the worst case(s) and selected for the final test.

AC power line conducted emissions test	
Final Test Mode	Description
Mode 4	TX Mode_2Mbps Channel 78

Radiated emissions test - Below 1GHz	
Final Test Mode	Description
Mode 4	TX Mode_2Mbps Channel 78

Radiated emissions test - Above 1GHz	
Final Test Mode	Description
Mode 2	TX Mode_2Mbps Channel 00/39/78

Maximum Output Power	
Final Test Mode	Description
Mode 1	TX Mode_1Mbps Channel 00/39/78
Mode 2	TX Mode_2Mbps Channel 00/39/78
Mode 3	TX Mode_3Mbps Channel 00/39/78

Other Conducted test	
Final Test Mode	Description
Mode 1	TX Mode_1Mbps Channel 00/39/78
Mode 2	TX Mode_2Mbps Channel 00/39/78
Mode 3	TX Mode_3Mbps Channel 00/39/78

Note:

(1) The measurements for Output Power were tested with DH1/3/5 during 1Mbps and 2Mbps, the worst case were 1Mbps (DH5), 2Mbps (DH5) and 3Mbps (DH5), only worst case were documented for other test items except Average Time of Occupancy.

(2) For radiated emission above 1 GHz test, the spurious points of 1GHz~26.5GHz have been pre-tested and in this report only recorded the worst case. The remaining spurious points are all

below the limit value of 20dB.

(3) This product has the mode of BT AFH, which was considered during testing.
800/20/X(X = 2 of DH1, X = 4 of DH3 or X = 6 of DH5) with 20, 10 or 6.67 hops per second in a channel, and then multiply 0.4*20 (20 # of hopping). But this mode is not the worst case mode as duration of the packet is same, and this report only shows the worst case mode.

(4) For AC power line conducted emissions and radiated spurious emissions below 1 GHz test, the 1Mbps Channel 00 are found to be the worst case and recorded.

2.3. PARAMETERS OF TEST SOFTWARE

During testing, channel & power controlling software provided by the customer was used to control the operating channel as well as the output power level.

Test Software Version	RTLBTAPP		
Frequency (MHz)	2402	2441	2480
1Mbps	default	default	default
2Mbps	default	default	default
3Mbps	default	default	default

2.4. SUPPORT UNITS

No.	Equipment	Model	Manufacturer	Series No
1	Flat Panel Monitor	S2721QS	DELL	/
2	Mouse	DOK-680U	LENOVO	701E8328
3	Earphone	E1	LENOVO	/
4	USB Disk	32GB	Kingston	/
5	Keyboard	SK-8827	LENOVO	21R1ADL
6	Printer	MJPMYTJHT01	Xiaomi	/

3.. AC POWER LINE CONDUCTED EMISSIONS

3.1. LIMIT

Frequency of Emission (MHz)	Limit (dBμV)	
	Quasi-peak	Average
0.15 - 0.5	66 to 56*	56 to 46*
0.5 - 5.0	56	46
5.0 - 30.0	60	50

Note:

(1) The tighter limit applies at the band edges.
(2) The limit of " * " marked band means the limitation decreases linearly with the logarithm of the frequency in the range.

3.2. TEST PROCEDURE

a. The EUT was placed 0.8 meters from the horizontal ground plane with EUT being connected to the power mains through a line impedance stabilization network (LISN). All other support equipment powered from additional LISN(s). The LISN provide 50 Ohm/ 50uH of coupling impedance for the measuring instrument.
b. Interconnecting cables that hang closer than 40 cm to the ground plane shall be folded back and forth in the center forming a bundle 30 to 40 cm long.
c. I/O cables that are not connected to a peripheral shall be bundled in the center. The end of the cable may be terminated, if required, using the correct terminating impedance. The overall length shall not exceed 1 m.
d. LISN at least 80 cm from nearest part of EUT chassis.
e. For the actual test configuration, please refer to the related Item –EUT Test Photos.

The following table is the setting of the receiver:

Receiver Parameters	Setting
Start Frequency	0.15 MHz
Stop Frequency	30 MHz
IF Bandwidth	9 kHz

3.3. DEVIATION FROM TEST STANDARD

No deviation.

3.4. TEST SETUP

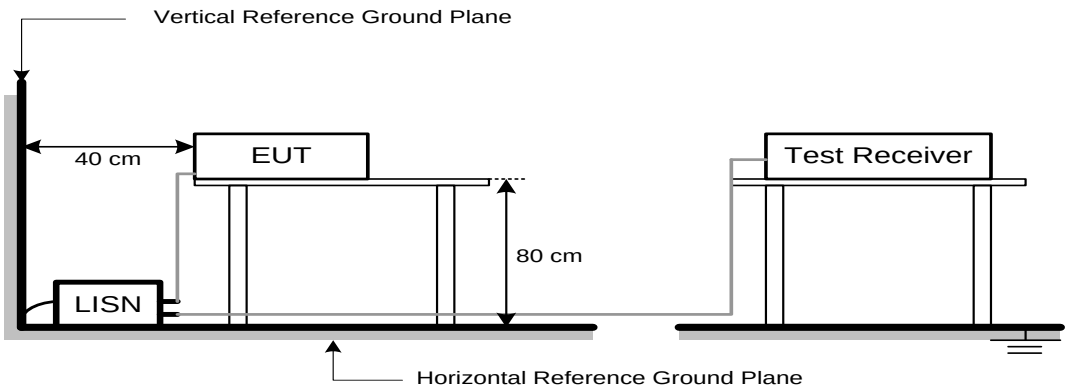

3.5. EUT OPERATING CONDITIONS

The EUT was configured for testing in a typical function (as a customer would normally use it), EUT was programmed to be in continuously transmitting data or hopping on mode.

3.6. TEST RESULTS

Please refer to the APPENDIX A.

Remark:

(1) All readings are QP Mode value unless otherwise stated AVG in column of『Note』. If the QP Mode Measured value compliance with the QP Limits and lower than AVG Limits, the EUT shall be deemed to meet both QP & AVG Limits and then only QP Mode was measured, but AVG Mode didn't perform in this case, a "*" marked in AVG Mode column of Interference Voltage Measured.

(2) Measuring frequency range from 150 kHz to 30 MHz.

4.. RADIATED EMISSIONS

4.1. LIMIT

In case the emission fall within the restricted band specified on 15.205(a), then the 15.209(a) limit in the table below has to be followed.

LIMITS OF RADIATED EMISSION MEASUREMENT (9 kHz-1000 MHz)

Frequency (MHz)	Field Strength (microvolts/meter)	Measurement Distance (meters)
0.009-0.490	2400/F(kHz)	300
0.490-1.705	24000/F(kHz)	30
1.705-30.0	30	30
30-88	100	3
88-216	150	3
216-960	200	3
Above 960	500	3

LIMITS OF RADIATED EMISSION MEASUREMENT (Above 1000 MHz)

Frequency (MHz)	(dBuV/m at 3 m)	
	Peak	Average
Above 1000	74	54

Note:

(1) The limit for radiated test was performed according to FCC CFR Title 47, Part 15, Subpart C.

(2) The tighter limit applies at the band edges.

(3) Emission level (dBuV/m)=20log Emission level (uV/m).

4.2. TEST PROCEDURE

a. The measuring distance of 3 m shall be used for measurements. The EUT was placed on the top of a rotating table 0.8 meter above the ground at a 3 meter semi-anechoic chamber. The table was rotated 360 degrees to determine the position of the highest radiation.(below 1 GHz)
b. The measuring distance of 3 m shall be used for measurements. The EUT was placed on the top of a rotating table 1.5 meter above the ground at a 3 meter semi-anechoic chamber. The table was rotated 360 degrees to determine the position of the highest radiation.(above 1 GHz)
c. The height of the equipment or of the substitution antenna shall be 0.8m or 1.5m; the height of the test antenna shall vary between 1 m to 4 m. Both horizontal and vertical polarizations of the antenna are set to make the measurement.
d. For each suspected emission, the EUT was arranged to its worst case and then the antenna was tuned to heights find the maximum reading (used Bore sight function).
e. The receiver system was set to peak and average detect function and specified bandwidth with maximum hold mode when the test frequency is above 1 GHz.
f. The initial step in collecting radiated emission data is a receiver peak detector mode pre-scanning the measurement frequency range. Significant peaks are then marked and then Quasi Peak detector mode re-measured.
g. All readings are Peak unless otherwise stated QP in column of Note. Peak denotes that the Peak reading compliance with the QP Limits and then QP Mode measurement didn't perform. (below 1 GHz)
h. All readings are Peak Mode value unless otherwise stated AVG in column of Note. If the Peak Mode Measured value compliance with the Peak Limits and lower than AVG Limits, the EUT shall be deemed to meet both Peak & AVG Limits and then only Peak Mode was measured, but AVG Mode didn't perform. (above 1 GHz)
i. For the actual test configuration, please refer to the related Item –EUT Test Photos.

The following table is the setting of the receiver:

Spectrum Parameters	Setting
Start ~ Stop Frequency	9 kHz~150 kHz for RBW 200 Hz
Start ~ Stop Frequency	0.15 MHz~30 MHz for RBW 9 kHz
Start ~ Stop Frequency	30 MHz~1000 MHz for RBW 100 kHz

Spectrum Parameters	Setting
Start Frequency	1000 MHz
Stop Frequency	10th carrier harmonic
RBW / VBW (Emission in restricted band)	1 MHz / 3 MHz for PK value 1 MHz / 1/T Hz for AVG value

Spectrum Parameters	Setting
Start ~ Stop Frequency	9 kHz~90 kHz for PK/AVG detector
Start ~ Stop Frequency	90 kHz~110 kHz for QP detector
Start ~ Stop Frequency	110 kHz~490 kHz for PK/AVG detector
Start ~ Stop Frequency	490 kHz~30 MHz for QP detector
Start ~ Stop Frequency	30 MHz~1000 MHz for QP detector
Start ~ Stop Frequency	1 GHz~26.5 GHz for PK/AVG detector

4.3. DEVIATION FROM TEST STANDARD

No deviation.

4.4. TEST SETUP

9 kHz to 30 MHz

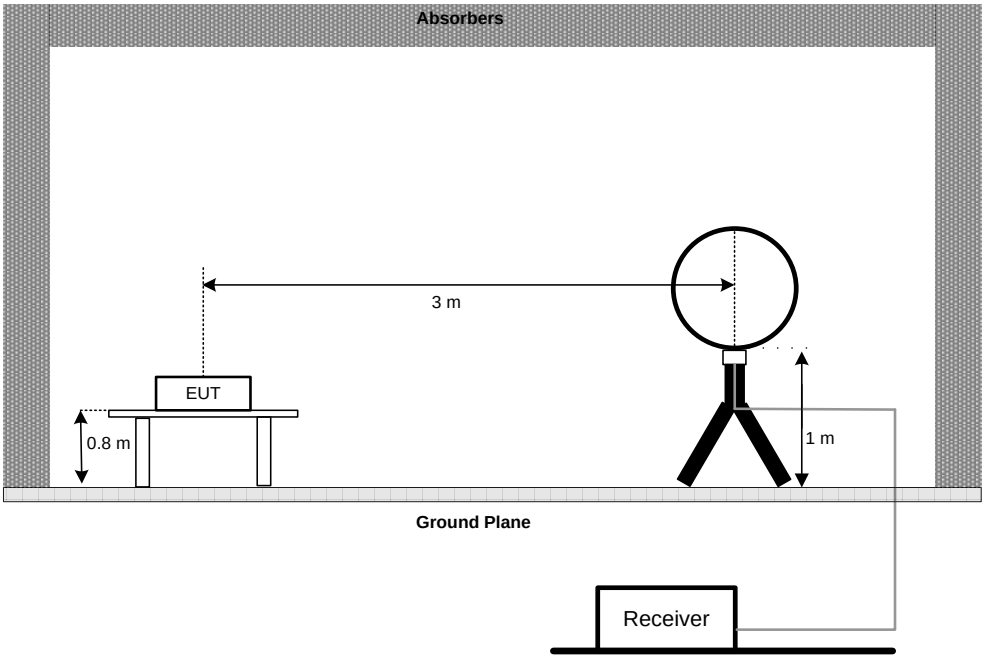

30 MHz to 1 GHz

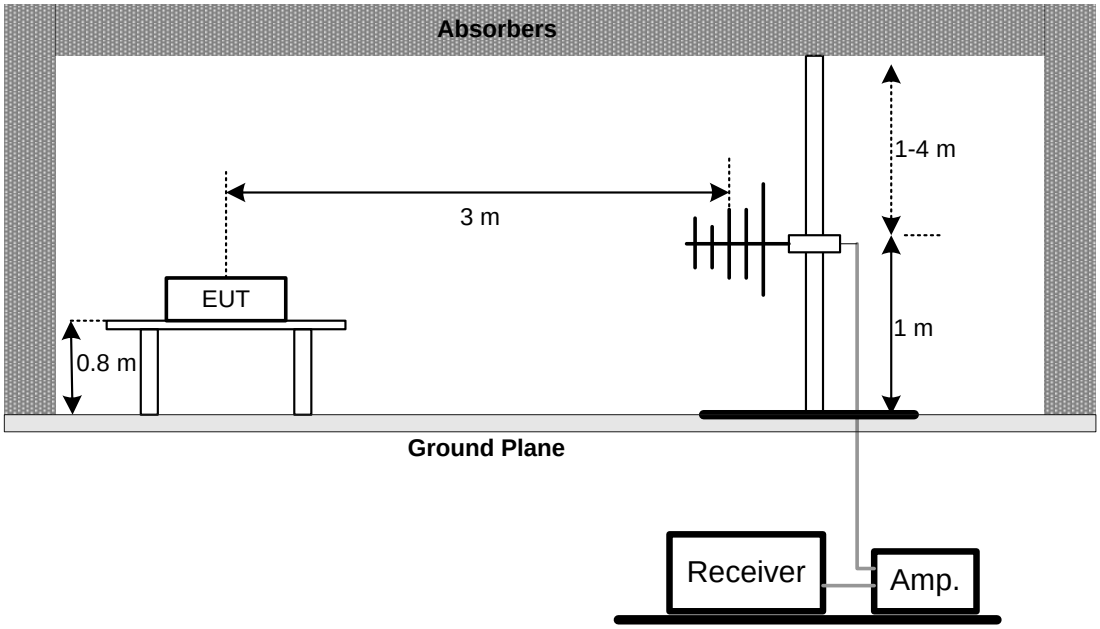

Above 1 GHz

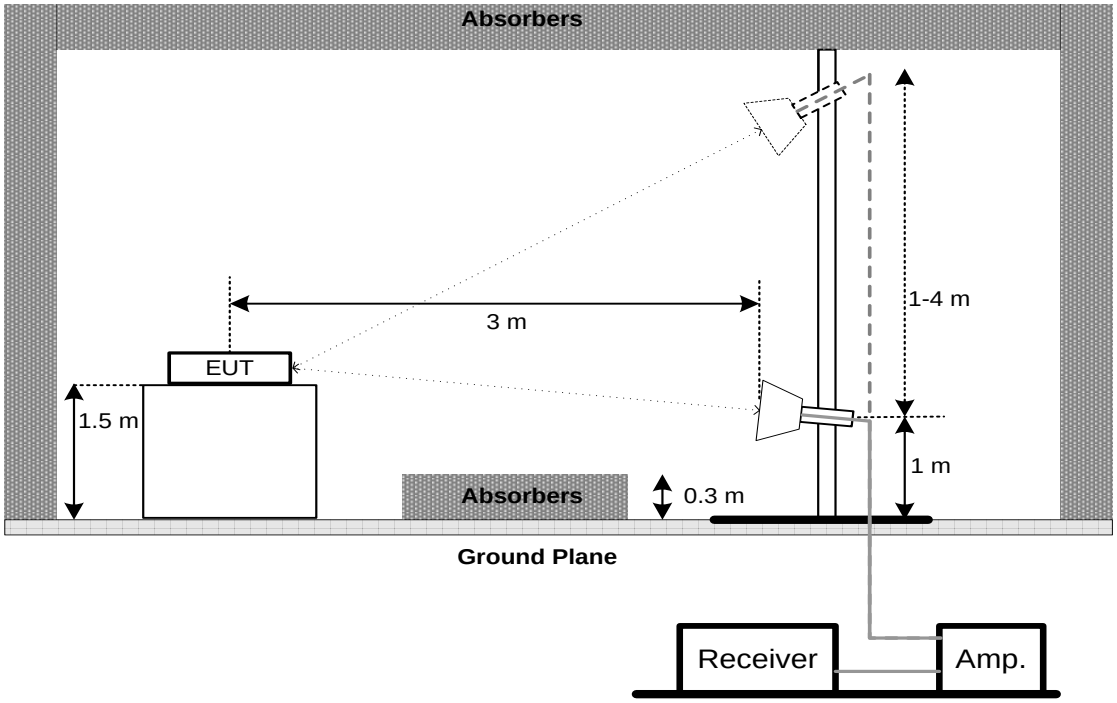

4.5. EUT OPERATING CONDITIONS

The EUT was programmed to be in continuously transmitting mode.

4.6. TEST RESULTS - 9 kHz TO 30 MHz

Please refer to the APPENDIX B.

Remark:

(1) Distance extrapolation factor = 40 log (specific distance / test distance) (dB).
(2) Limit line = specific limits (dBuV) + distance extrapolation factor.

4.7. TEST RESULTS - 30 MHz TO 1000 MHz

Please refer to the APPENDIX C.

4.8. TEST RESULTS - ABOVE 1000 MHz

Please refer to the APPENDIX D.

Remark:

(1) No limit: This is fundamental signal, the judgment is not applicable.
For fundamental signal judgment was referred to Peak output test.

5.. NUMBER OF HOPPING FREQUENCY

5.1. LIMIT

Section	Test Item	Limit
FCC 15.247(a)(1)(iii)	Number of Hopping Frequency	15

5.2. TEST PROCEDURE

a. The EUT was directly connected to the tonscend test system and antenna output port as show in the block diagram below.
b. The following table is the setting of the spectrum analyzer:

Spectrum Parameters	Setting
Span Frequency	> Operating Frequency Range
RBW	300 kHz
VBW	300 kHz
Detector	Peak
Trace	Max Hold
Sweep Time	Auto

5.3. DEVIATION FROM STANDARD

No deviation.

5.4. TEST SETUP

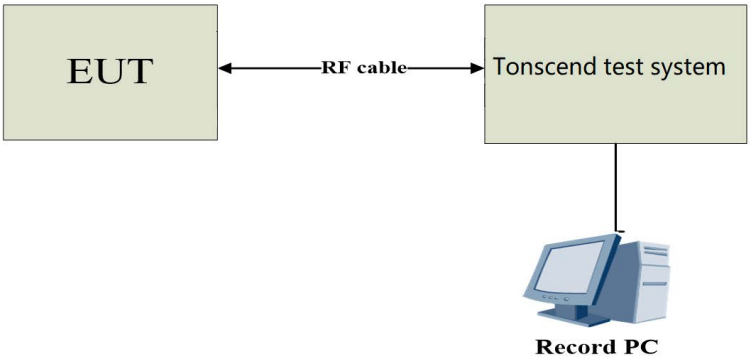

5.5. EUT OPERATION CONDITIONS

The EUT was programmed to be in continuously transmitting mode.

5.6. TEST RESULTS

Please refer to the APPENDIX E.

6.. AVERAGE TIME OF OCCUPANCY

6.1. LIMIT

Section	Test Item	Limit
FCC 15.247(a)(1)(iii)	Average Time of Occupancy	0.4sec

6.2. TEST PROCEDURE

a. Set the EUT for DH1, DH3 and DH5 packet transmitting.
b. Measure the maximum time duration of one single pulse.
c. DH1 Packet permit maximum 1600 / 79 /2 = 10.12 hops per second in each channel (1 time slot TX, 1 time slot RX). So, the dwell time is the time duration of the pulse times 10.12 x 31.6 = 320 within 31.6 seconds.
d. DH3 Packet permit maximum 1600 / 79 / 4 = 5.06 hops per second in each channel (3 time slots TX, 1 time slot RX). So, the dwell time is the time duration of the pulse times 5.06 x 31.6 = 160 within 31.6 seconds.
e. DH5 Packet permit maximum 1600/ 79 / 6 = 3.37 hops per second in each channel (5 time slots TX, 1 time slot RX). So, the dwell time is the time duration of the pulse times 3.37 x 31.6 = 106.6 within 31.6 seconds.
f. The EUT was directly connected to the tonscend test system and antenna output port as show in the block diagram below.
g. The following table is the setting of the spectrum analyzer:

Spectrum Parameters	Setting
Span Frequency	0 MHz
RBW	1 MHz
VBW	1 MHz
Detector	Peak
Trace	Max Hold
Sweep Time	As necessary to capture the entire dwell time per hopping channel

6.3. DEVIATION FROM STANDARD

No deviation.

6.4. TEST SETUP

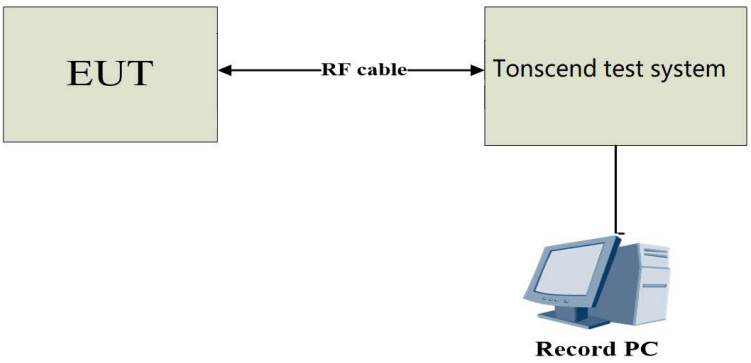

6.5. EUT OPERATION CONDITIONS

The EUT was programmed to be in continuously transmitting mode.

6.6. TEST RESULTS

Please refer to the APPENDIX F.

7.. HOPPING CHANNEL SEPARATION

7.1. LIMIT

Frequency hopping systems operating in the 2400-2483.5 MHz band may have hopping channel carrier frequencies that are separated by 25 kHz or two-thirds of the 20 dB bandwidth of the hopping channel, whichever is greater, provided the systems operate with an output power no greater than 125 mW.

7.2. TEST PROCEDURE

a. The EUT was directly connected to the tonscend test system and antenna output port as show in the block diagram below.

b. The following table is the setting of the spectrum analyzer:

Spectrum Parameters	Setting
Span Frequency	Wide enough to capture the peaks of two adjacent channels
RBW	30 kHz
VBW	100 kHz
Detector	Peak
Trace	Max Hold
Sweep Time	Auto

7.3. DEVIATION FROM STANDARD

No deviation.

7.4. TEST SETUP

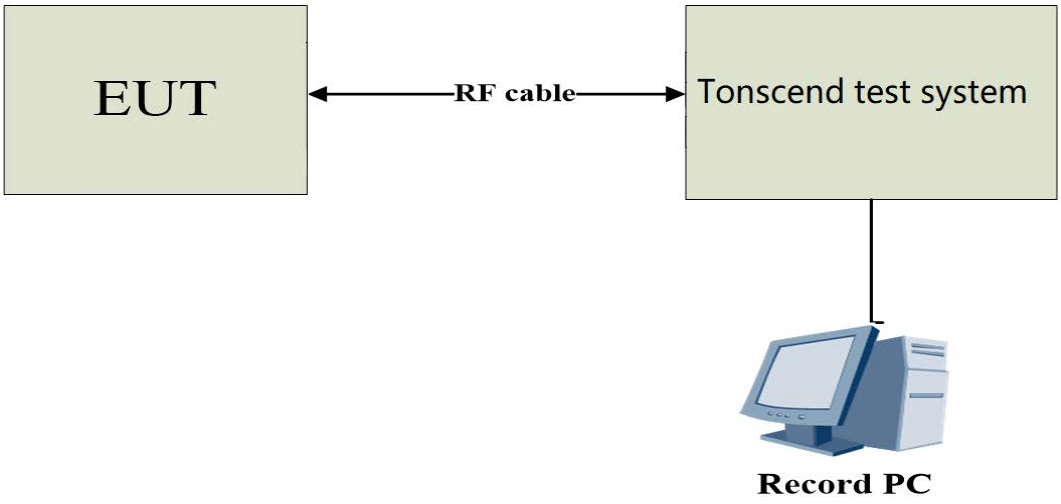

7.5. EUT OPERATION CONDITIONS

The EUT was programmed to be in continuously transmitting mode.

7.6. TEST RESULTS

Please refer to the APPENDIX G.

8.. BANDWIDTH

8.1. LIMIT

Section	Test Item
FCC 15.247(a)(1)	Bandwidth

8.2. TEST PROCEDURE

a. The EUT was directly connected to the tonscend test system and antenna output port as show in the block diagram below.
b. The following table is the setting of the spectrum analyzer:

Spectrum Parameters	Setting
Span Frequency	> Measurement Bandwidth
RBW	30 kHz
VBW	100 kHz
Detector	Peak
Trace	Max Hold
Sweep Time	Auto

8.3. DEVIATION FROM STANDARD

No deviation.

8.4. TEST SETUP

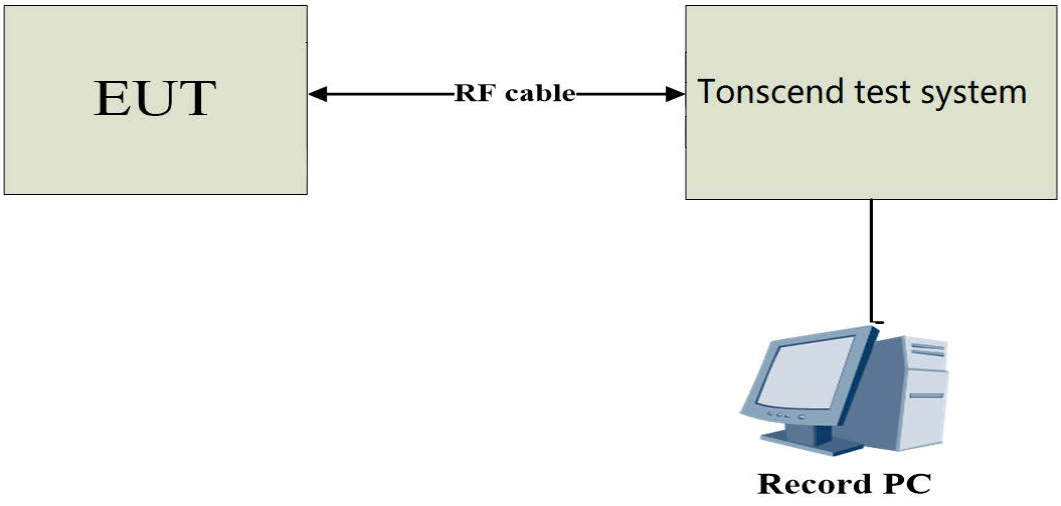

8.5. EUT OPERATION CONDITIONS

The EUT was programmed to be in continuously transmitting mode.

8.6. TEST RESULTS

Please refer to the APPENDIX H.

9.. MAXIMUM OUTPUT POWER

9.1. LIMIT

Section	Test Item	Limit
FCC 15.247(a)(1)	Maximum Output Power	0.1250 Watt or 20.97 dBm

Note: Frequency hopping systems operating in the 2400-2483.5 MHz band may have hopping channel carrier frequencies that are separated by 25 kHz or two-thirds of the 20 dB bandwidth of the hopping channel, whichever is greater, provided the systems operate with an output power no greater than 125 mW.

9.2. TEST PROCEDURE

a. The EUT was directly connected to the tonscend test system and antenna output port as show in the block diagram below.
b. The following table is the setting of the spectrum analyzer:

Spectrum Parameters	Setting
Span Frequency	Approximately five times the 20 dB bandwidth, centered on a hopping channel.
RBW	3 MHz
VBW	8 MHz
Detector	Peak
Trace	Max Hold
Sweep Time	Auto

9.3. DEVIATION FROM STANDARD

No deviation.

9.4. TEST SETUP

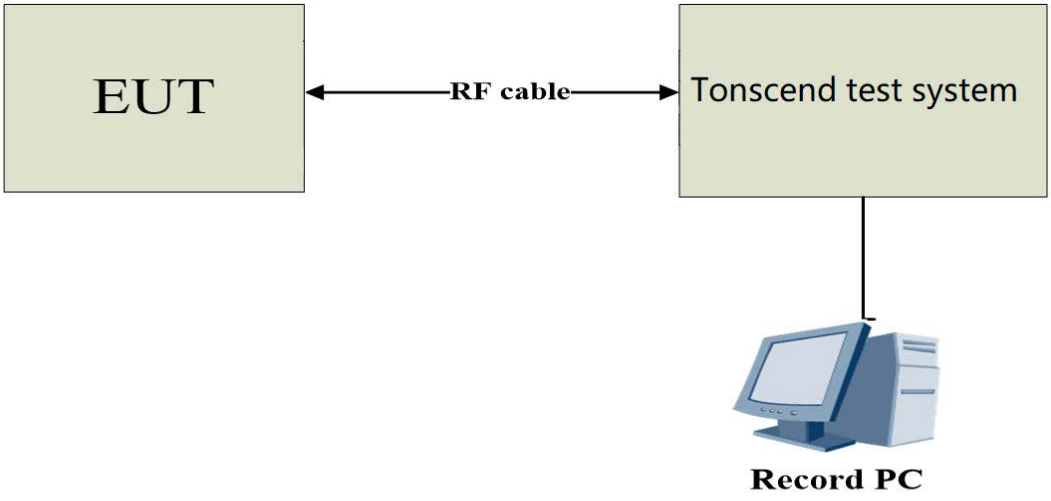

9.5. EUT OPERATION CONDITIONS

The EUT was programmed to be in continuously transmitting mode.

9.6. TEST RESULTS

Please refer to the APPENDIX I.

10.. CONDUCTED SPURIOUS EMISSION

10.1. LIMIT

In any 100 kHz bandwidth outside the frequency band in which the spread spectrum or digitally modulated intentional radiator is operating, the radio frequency power that is produced by the intentional radiator shall be at least 20 dB below that in the 100 kHz bandwidth within the band that contains the highest level of the desired power, based on either an RF conducted or a radiated measurement, provided the transmitter demonstrates compliance with the peak Output Power limits. If the transmitter complies with the Output Power limits based on the use of RMS averaging over a time interval, as permitted under paragraph (b)(3) of this section, the attenuation required under this paragraph shall be 30 dB instead of 20 dB. Attenuation below the general limits specified in Section 15.209(a) is not required.

10.2. TEST PROCEDURE

a. The EUT was directly connected to the tonscend test system and antenna output port as show in the block diagram below.
b. The following table is the setting of the spectrum analyzer:

Spectrum Parameters	Setting
Start Frequency	30 MHz
Stop Frequency	26.5 GHz
RBW	100 kHz
VBW	300 kHz
Detector	Peak
Trace	Max Hold
Sweep Time	Auto

10.3. DEVIATION FROM STANDARD

No deviation.

10.4. TEST SETUP

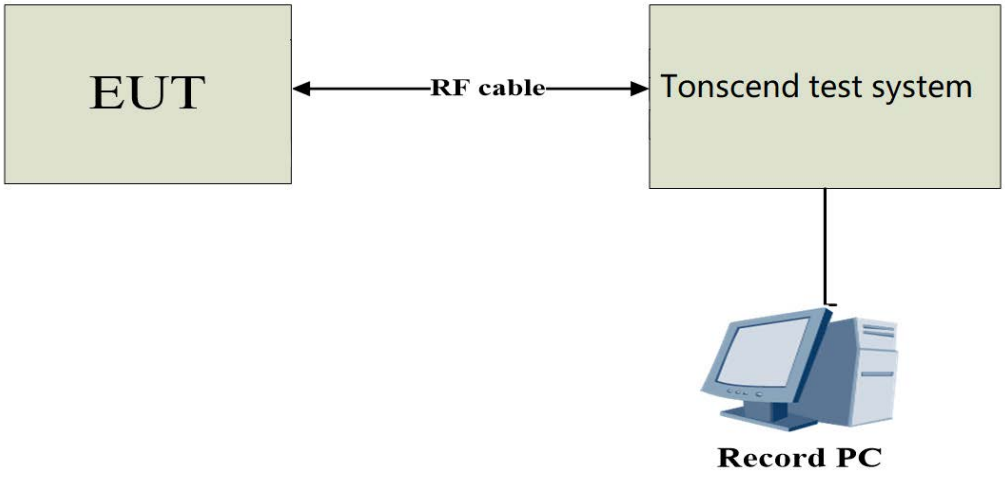

10.5. EUT OPERATION CONDITIONS

The EUT was programmed to be in continuously transmitting mode.

10.6. TEST RESULTS

Please refer to the APPENDIX J.

11.. MEASUREMENT INSTRUMENTS LIST

Radiated Emissions							
No.	Equipment	Manufacturer	Type No.	Serial No.	Inventory No.	Cal. date (yyyy/mm/dd)	Cal. Due date (yyyy/mm/dd)
1	Test receiver	Rohde&Schwarz	ESU	100184	JLE011	2024/4/24	2025/4/23
2	Log periodic antenna	Schwarzbeck	VULB 9168	1151	JLE012	2024/4/20	2025/4/19
3	Low frequency amplifier	/	LNA 0920N	2014	JLE023	2024/4/24	2025/4/23
4	High frequency amplifier	Schwarzbeck	BBV 9718	284	JLE024	2024/4/24	2025/4/23
5	Horn Antenna	SCHWARZBECK	BBHA 9120 D	9120D-1273	JLE028	2024/4/20	2025/4/19
6	Temp&Humidity Recorder	Meideshi	JR900	/	JLE021	2024/4/24	2025/4/23
7	Horn Antenna	SCHWARZBECK	BBHA 9170	9170#685	JLE029	2024/7/15	2025/7/14
8	Loop Antenna	SCHWARZBECK	FMZB1519B	00029	JLE030	2024/7/15	2025/7/14
9	Broadband preamplifier	Schwarzbeck	BBV9721	9721-019	JLE025	2024/4/24	2025/4/23
10	Test software	Farad Technology Co., Ltd	EZ-EMC Ver.TW-03A2				
Conducted Emission							
1	LISN	Rohde&Schwarz	ENV216	100075	JLE002	2024/4/24	2025/4/23
2	ISN	Schwarzbeck	CATE 5 8158	#171	JLE003	2024/4/24	2025/4/23
3	Test receiver	Rohde&Schwarz	ESCI	100718	JLE010	2024/4/24	2025/4/23
4	Pulse limiter	Rohde&Schwarz	ESH3-Z2	102299	JLE047	2024/4/24	2025/4/23
5	Temp&Humidity Recorder	Meideshi	JR900	/	JLE020	2024/4/24	2025/4/23
6	Test software	Farad Technology Co., Ltd	EZ-EMC Ver.TW-03A2				
RF Conducted Emission							
1	MXA Signal Analyzer	Keysight	N9021B	MY60080169	JLE050	2024/4/20	2025/4/19
2	RF Control Unit	dsusoft	JS0806-2	21G8060449	JLE053	2024/4/20	2025/4/19
3	power supply unit	dsusoft	JS0806-4 ADC	N/A	JLE055	2024/4/20	2025/4/19
4	VXG Signal Generator	Keysight	M9384B	MY61270787	JLE051	2024/4/20	2025/4/19
5	EXG Analog Signal Generator	Keysight	N5173B	MY59101282	JLE052	2024/4/20	2025/4/19
6	Wideband Radio Communication Tester	Rohde&Schwarz	CMW500	1201.0002K50-116064-Dt	JLE054	2024/4/20	2025/4/19
7	Test software	dsusoft	JS1120-3 Ver.3.2.22.0				

12.. ANTENNA REQUIREMENT

Test standard: FCC part 15.203

According to the manufacturer declared, the EUT has an external antenna, the antenna gain is 0.82dBi and the antenna connector is designed RP-SMA antenna interface.

Therefore the EUT is considered sufficient to comply with the provision.

Refer to EUT Photo for further details.

APPENDIX A - AC POWER LINE CONDUCTED EMISSIONS

Test Mode	TX Mode_2Mbps Channel 78	Phase	Line

Conducted Emission Measurement

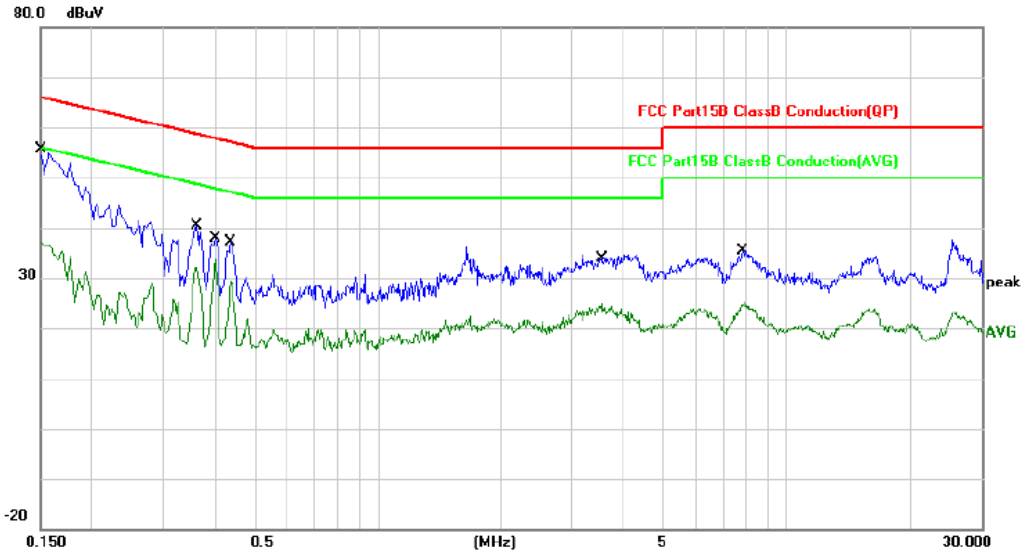

No.	Mk.	Freq.	Reading Level	Correct Factor	Measure-ment	Limit	Over		
		MHz	dBuV	dB	dBuV	dBuV	dB	Detector	Comment
1	*	0.1500	31.63	20.07	51.70	66.00	-14.30	QP	
2		0.1500	14.74	20.07	34.81	56.00	-21.19	AVG	
3		0.3620	16.71	20.10	36.81	58.68	-21.87	QP	
4		0.3620	10.33	20.10	30.43	48.68	-18.25	AVG	
5		0.4020	15.01	20.37	35.38	57.81	-22.43	QP	
6		0.4020	11.99	20.37	32.36	47.81	-15.45	AVG	
7		0.4380	13.15	20.28	33.43	57.10	-23.67	QP	
8		0.4380	7.38	20.28	27.66	47.10	-19.44	AVG	
9		3.5420	9.43	20.15	29.58	56.00	-26.42	QP	
10		3.5420	1.96	20.15	22.11	46.00	-23.89	AVG	
11		7.8420	9.48	20.20	29.68	60.00	-30.32	QP	
12		7.8420	3.46	20.20	23.66	50.00	-26.34	AVG	

REMARKS:
(1) Measurement Value = Reading Level + Correct Factor.
(2) Margin Level = Measurement Value - Limit Value.

Test Mode	TX Mode_2Mbps Channel 78	Phase	Neutral

Conducted Emission Measurement

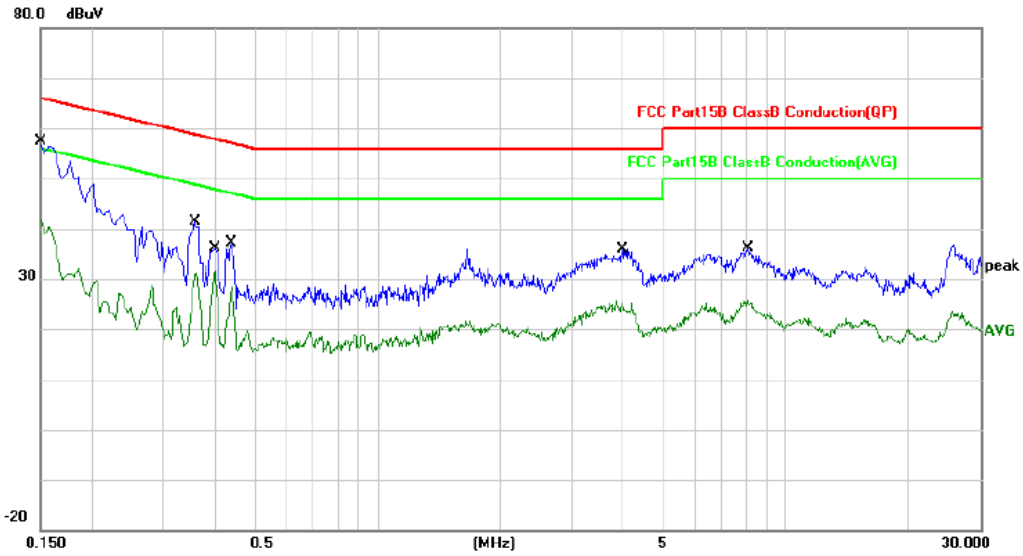

No.	Mk.	Freq.	Reading Level	Correct Factor	Measure-ment	Limit	Over		
		MHz	dBuV	dB	dBuV	dBuV	dB	Detector	Comment
1	*	0.1500	32.63	20.34	52.97	66.00	-13.03	QP	
2		0.1500	22.01	20.34	42.35	56.00	-13.65	AVG	
3		0.3580	16.71	20.08	36.79	58.77	-21.98	QP	
4		0.3580	9.23	20.08	29.31	48.77	-19.46	AVG	
5		0.4020	13.60	20.22	33.82	57.81	-23.99	QP	
6		0.4020	11.49	20.22	31.71	47.81	-16.10	AVG	
7		0.4420	12.85	20.11	32.96	57.02	-24.06	QP	
8		0.4420	7.44	20.11	27.55	47.02	-19.47	AVG	
9		3.9900	10.35	20.23	30.58	56.00	-25.42	QP	
10		3.9900	2.39	20.23	22.62	46.00	-23.38	AVG	
11		8.1140	10.61	20.39	31.00	60.00	-29.00	QP	
12		8.1140	3.72	20.39	24.11	50.00	-25.89	AVG	

REMARKS:
(1) Measurement Value = Reading Level + Correct Factor.
(2) Margin Level = Measurement Value - Limit Value.

APPENDIX B - RADIATED EMISSION - 9 KHZ TO 30 MHZ

The low frequency, which started from 9 kHz to 30MHz, was pre-scanned and the result which was 20dB lower than the limit line was not reported.

There is a comparison data of both open-field test site and semi-Anechoic chamber, and the result came out very similar.

APPENDIX C - RADIATED EMISSION - 30 MHZ TO 1000 MHZ

Test Mode	TX Mode_2Mbps Channel 78	Polarization	Vertical

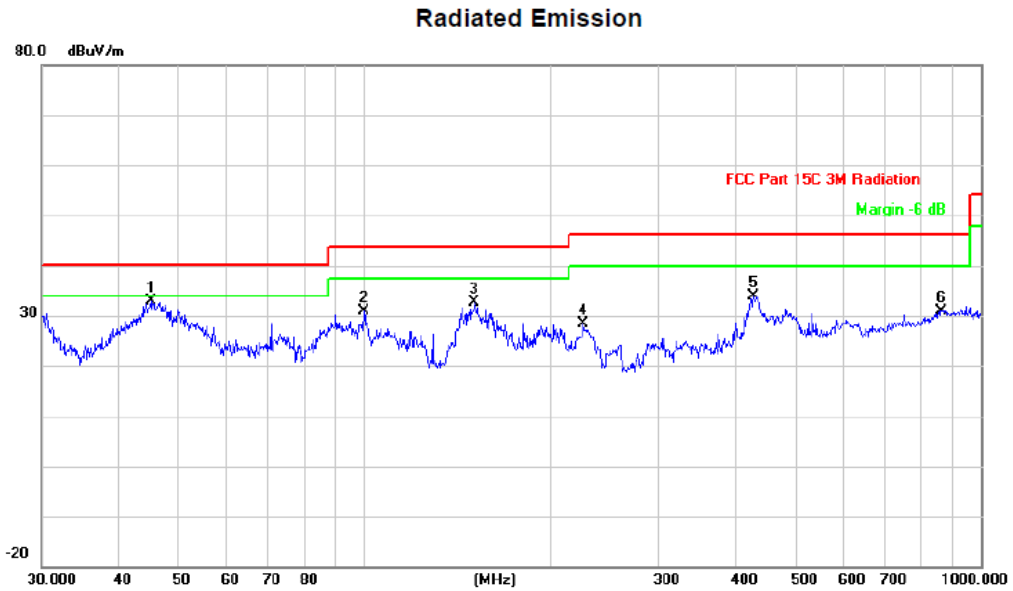

No.	Mk.	Freq.	Reading Level	Correct Factor	Measure-ment	Limit	Over		Antenna Height	Table Degree	
		MHz	dBuV	dB/m	dBuV/m	dBuV/m	dB	Detector	cm	degree	Comment
1	*	45.0583	42.43	-9.60	32.83	40.00	-7.17	peak			
2		99.8777	43.94	-13.10	30.84	43.50	-12.66	peak			
3		151.0663	41.25	-8.67	32.58	43.50	-10.92	peak			
4		226.8934	41.10	-12.65	28.45	46.00	-17.55	peak			
5		428.0192	40.56	-6.70	33.86	46.00	-12.14	peak			
6		863.0561	30.62	0.24	30.86	46.00	-15.14	peak			

REMARKS:
(1) Measurement Value = Reading Level + Correct Factor.
(2) Margin Level = Measurement Value - Limit Value.

Test Mode	TX Mode_2Mbps Channel 78	Polarization	Horizontal

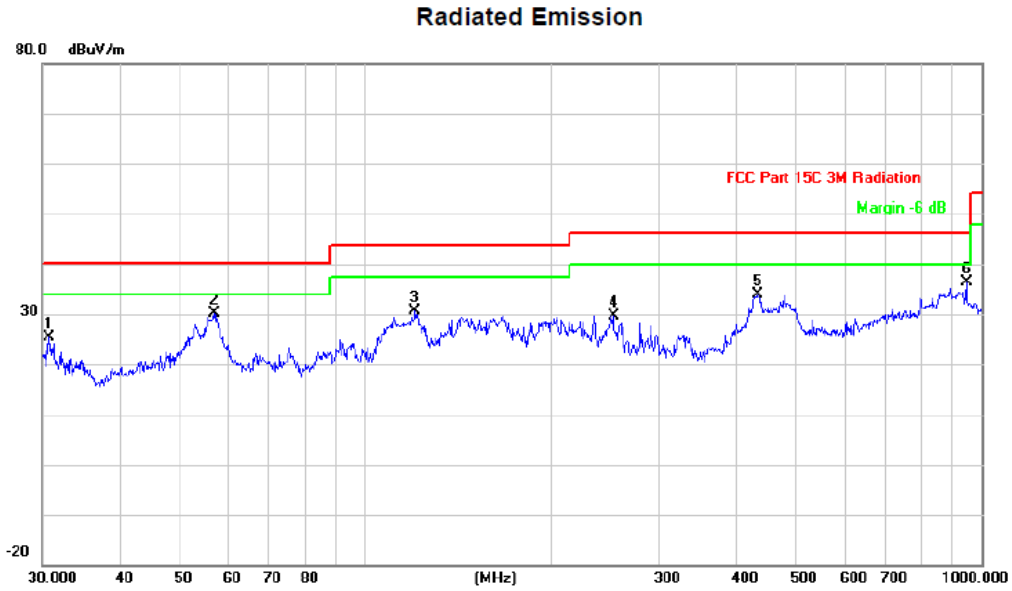

No.	Mk.	Freq.	Reading Level	Correct Factor	Measure-ment	Limit	Over		Antenna Height	Table Degree	
		MHz	dBuV	dB/m	dBuV/m	dBuV/m	dB	Detector	cm	degree	Comment
1		30.7454	36.28	-11.00	25.28	40.00	-14.72	peak			
2		56.9911	40.23	-10.20	30.03	40.00	-9.97	peak			
3		120.6991	41.50	-10.80	30.70	43.50	-12.80	peak			
4		252.9481	41.44	-11.72	29.72	46.00	-16.28	peak			
5		434.0650	40.50	-6.54	33.96	46.00	-12.04	peak			
6	*	945.4400	35.19	1.07	36.26	46.00	-9.74	peak			

REMARKS:
(1) Measurement Value = Reading Level + Correct Factor.
(2) Margin Level = Measurement Value - Limit Value.

APPENDIX D - RADIATED EMISSION - ABOVE 1000 MHZ

Test Mode	TX Mode_2Mbps Channel 00	Polarization	Vertical

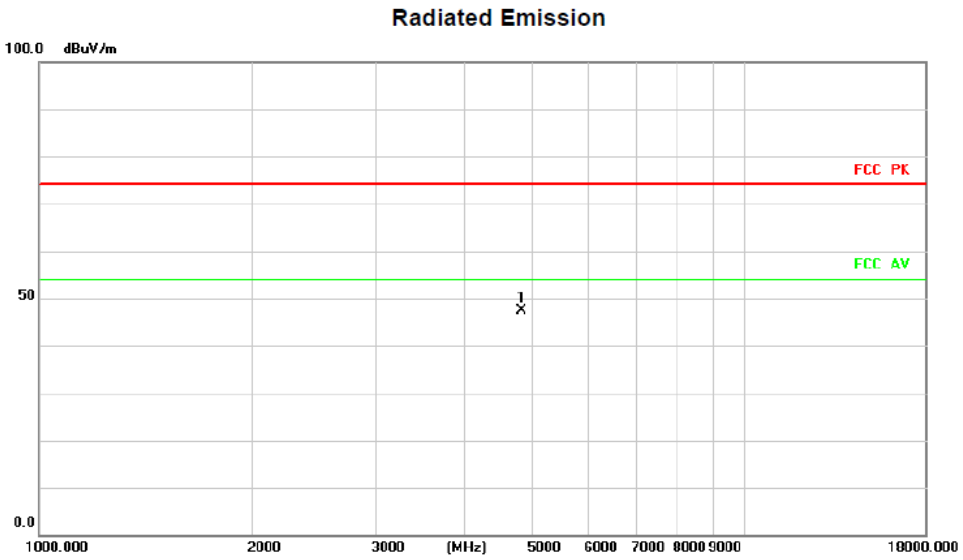

No.	Mk.	Freq.	Reading Level	Correct Factor	Measure-ment	Limit	Over		Antenna Height	Table Degree	
		MHz	dBuV	dB/m	dBuV/m	dBuV/m	dB	Detector	cm	degree	Comment
1	*	4824.000	51.22	-3.81	47.41	74.00	-26.59	peak			

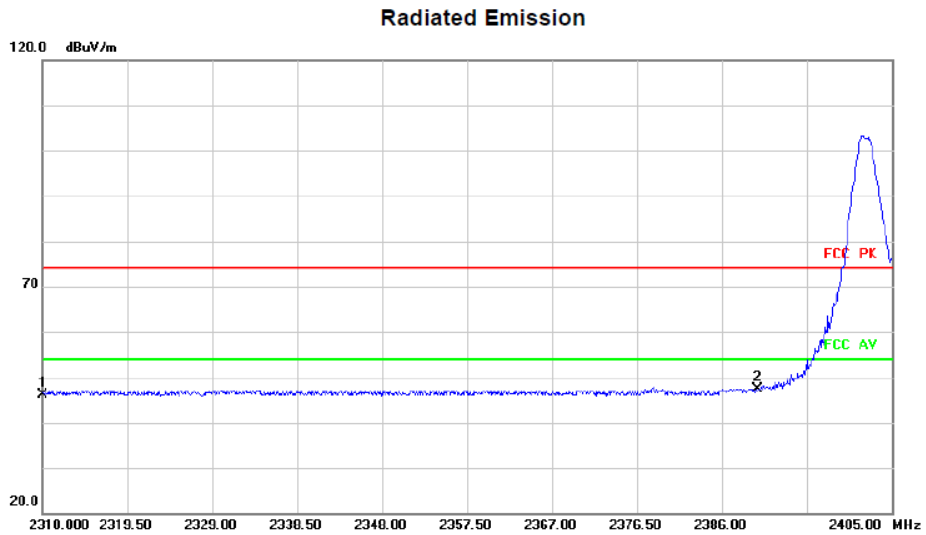

No.	Mk.	Freq.	Reading Level	Correct Factor	Measure-ment	Limit	Over		Antenna Height	Table Degree	
		MHz	dBuV	dB/m	dBuV/m	dBuV/m	dB	Detector	cm	degree	Comment
1		2310.000	45.98	0.19	46.17	74.00	-27.83	peak			
2	*	2390.000	46.86	0.41	47.27	74.00	-26.73	peak			

Test Mode	TX Mode_2Mbps Channel 00	Polarization	Horizontal

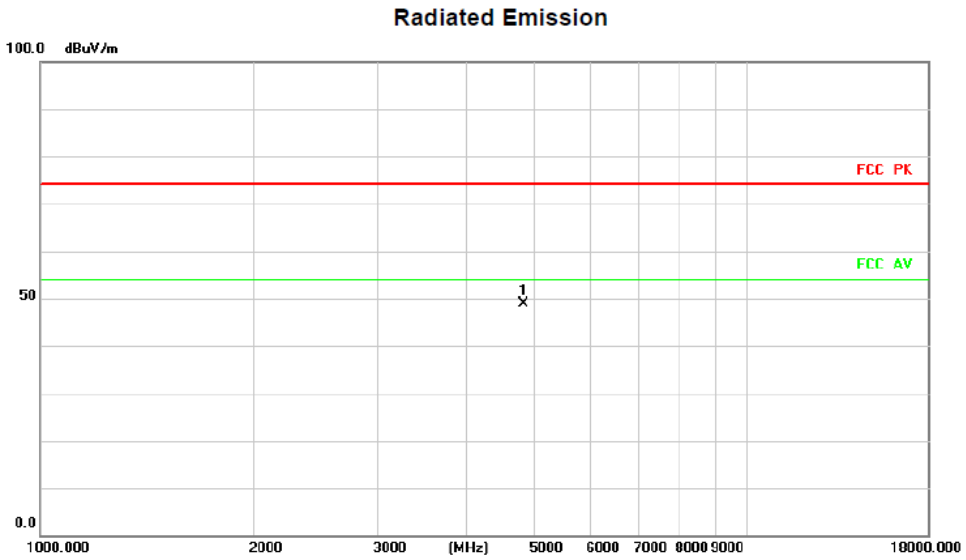

No.	Mk.	Freq.	Reading Level	Correct Factor	Measure-ment	Limit	Over		Antenna Height	Table Degree	
		MHz	dBuV	dB/m	dBuV/m	dBuV/m	dB	Detector	cm	degree	Comment
1	*	4824.000	52.67	-3.81	48.86	74.00	-25.14	peak			

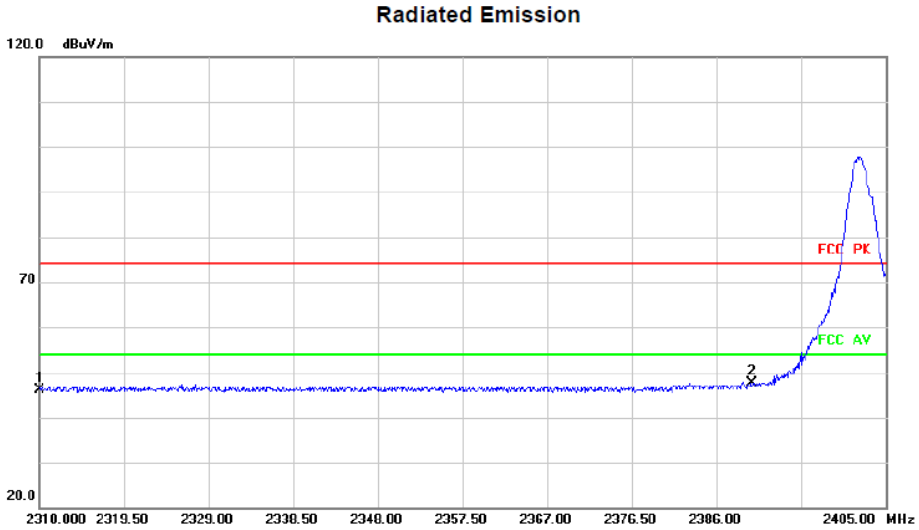

No.	Mk.	Freq.	Reading Level	Correct Factor	Measure-ment	Limit	Over		Antenna Height	Table Degree	
		MHz	dBuV	dB/m	dBuV/m	dBuV/m	dB	Detector	cm	degree	Comment
1		2310.000	45.89	0.19	46.08	74.00	-27.92	peak			
2	*	2390.000	47.30	0.41	47.71	74.00	-26.29	peak			

Test Mode	TX Mode_2Mbps Channel 39	Polarization	Vertical

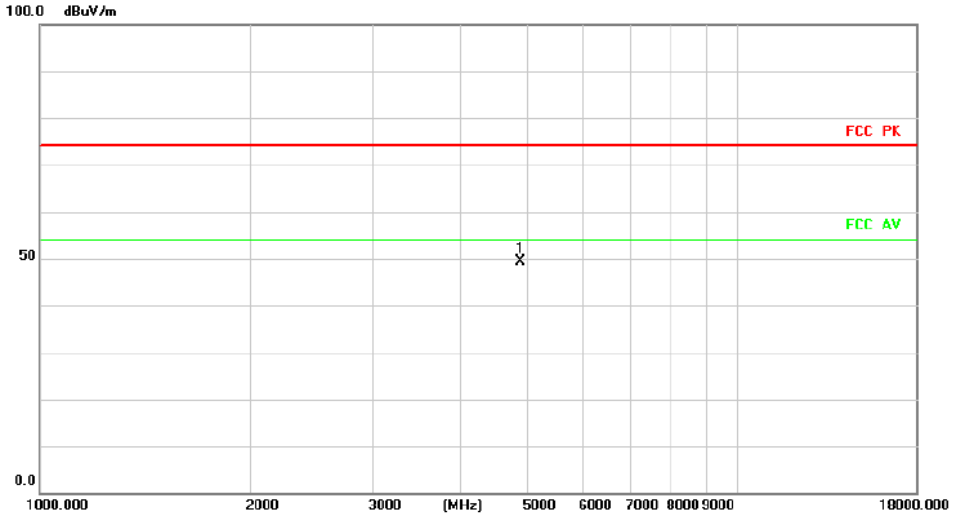

No.	Mk.	Freq.	Reading Level	Correct Factor	Measure-ment	Limit	Over		Antenna Height	Table Degree	
		MHz	dBuV	dB/m	dBuV/m	dBuV/m	dB	Detector	cm	degree	Comment
1	*	4882.000	53.39	-3.95	49.44	74.00	-24.56	peak			

Test Mode	TX Mode_2Mbps Channel 39	Polarization	Horizontal

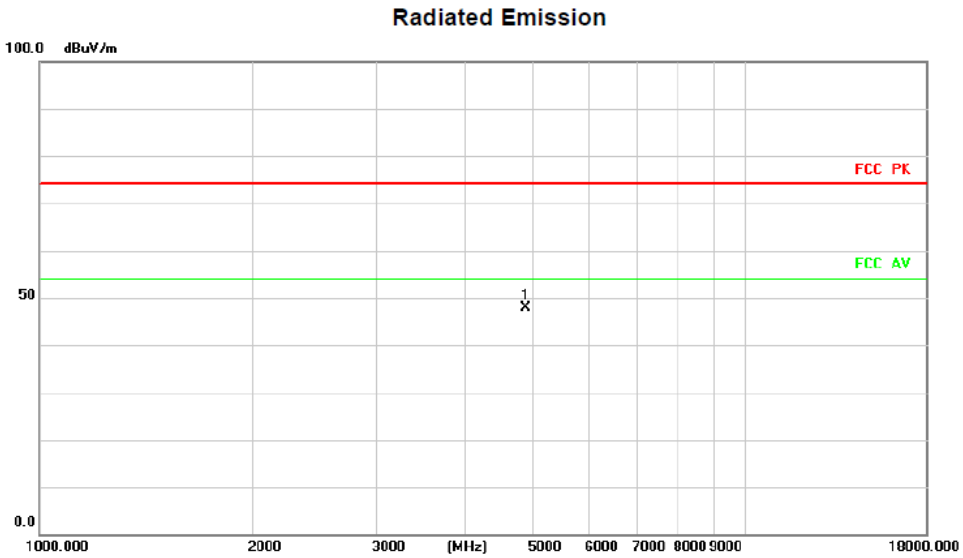

No.	Mk.	Freq.	Reading Level	Correct Factor	Measure-ment	Limit	Over		Antenna Height	Table Degree	
		MHz	dBuV	dB/m	dBuV/m	dBuV/m	dB	Detector	cm	degree	Comment
1	*	4882.000	51.92	-3.95	47.97	74.00	-26.03	peak			

Test Mode	TX Mode_2Mbps Channel78	Polarization	Vertical

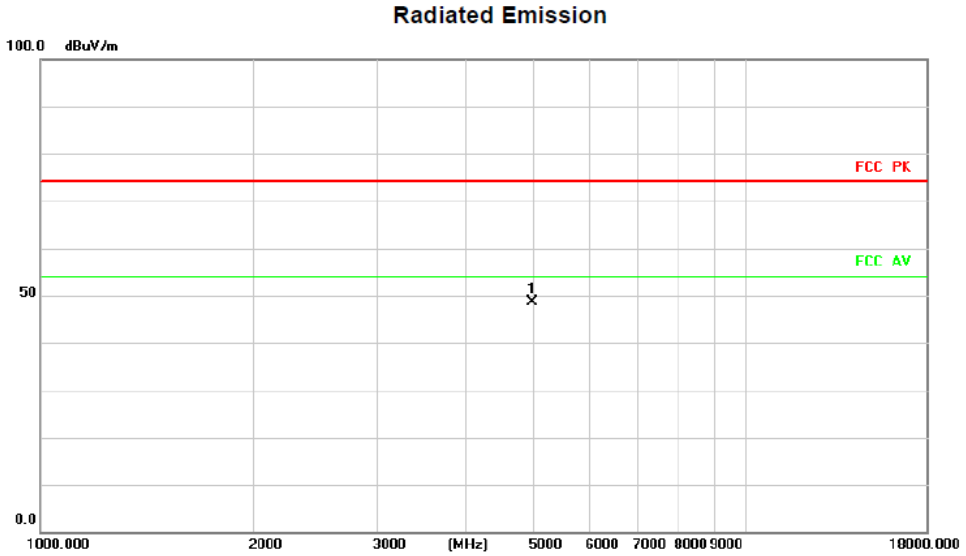

No.	Mk.	Freq.	Reading Level	Correct Factor	Measure-ment	Limit	Over		Antenna Height	Table Degree	
		MHz	dBuV	dB/m	dBuV/m	dBuV/m	dB	Detector	cm	degree	Comment
1	*	4960.000	52.62	-4.02	48.60	74.00	-25.40	peak			

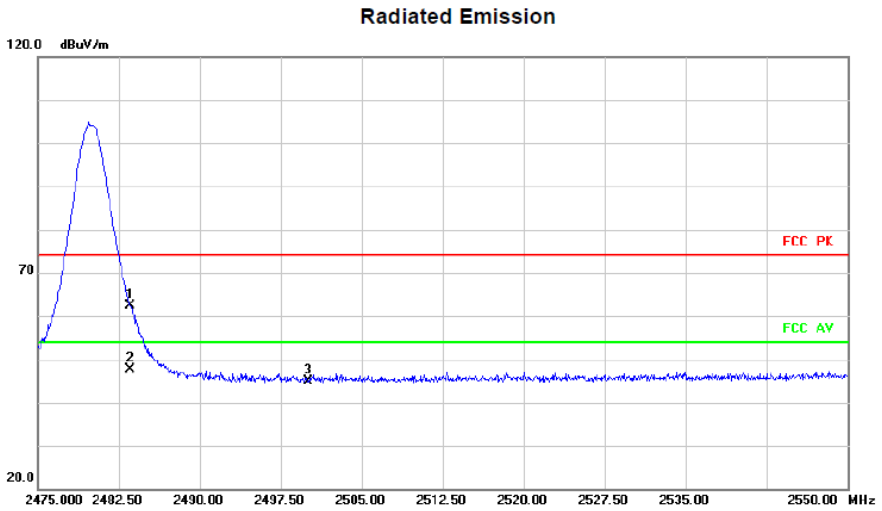

No.	Mk.	Freq.	Reading Level	Correct Factor	Measure-ment	Limit	Over		Antenna Height	Table Degree	
		MHz	dBuV	dB/m	dBuV/m	dBuV/m	dB	Detector	cm	degree	Comment
1		2483.500	61.40	1.09	62.49	74.00	-11.51	peak			
2	*	2483.500	46.45	1.09	47.54	54.00	-6.46	AVG			
3		2500.000	43.78	1.22	45.00	74.00	-29.00	peak			

Test Mode	TX Mode_2Mbps Channel 78	Polarization	Horizontal

No.	Mk.	Freq.	Reading Level	Correct Factor	Measure-ment	Limit	Over		Antenna Height	Table Degree	
		MHz	dBuV	dB/m	dBuV/m	dBuV/m	dB	Detector	cm	degree	Comment
1	*	4960.000	52.09	-4.02	48.07	74.00	-25.93	peak			

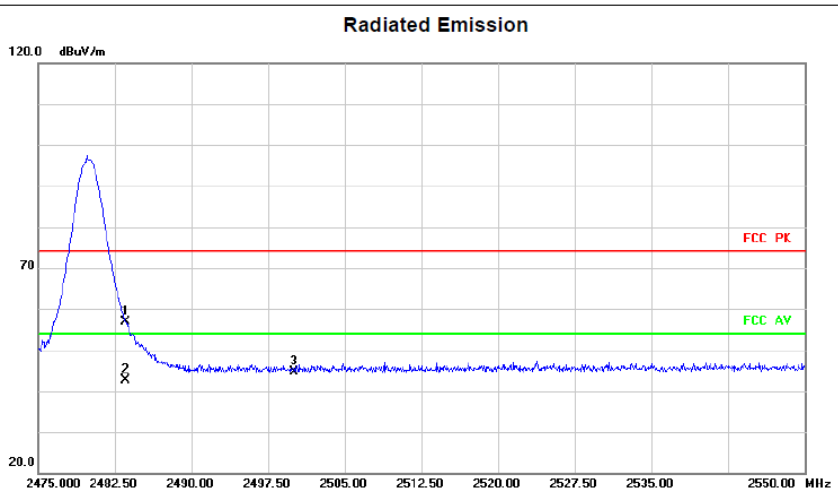

No.	Mk.	Freq.	Reading Level	Correct Factor	Measure-ment	Limit	Over		Antenna Height	Table Degree	
		MHz	dBuV	dB/m	dBuV/m	dBuV/m	dB	Detector	cm	degree	Comment
1		2483.500	55.88	1.09	56.97	74.00	-17.03	peak			
2	*	2483.500	41.48	1.09	42.57	54.00	-11.43	AVG			
3		2500.000	43.44	1.22	44.66	74.00	-29.34	peak			

REMARKS:
(1) Measurement Value = Reading Level + Correct Factor.
(2) Margin Level = Measurement Value - Limit Value.

APPENDIX E - NUMBER OF HOPPING FREQUENCY

Test Mode	Antenna	Freq(MHz)	Result[Num]	Limit[Num]	Verdict
DH5	Ant1	Hop	79	≥15	PASS
2DH5	Ant1	Hop	79	≥15	PASS
3DH5	Ant1	Hop	79	≥15	PASS

Test Graphs

DH5_Ant1_Hop

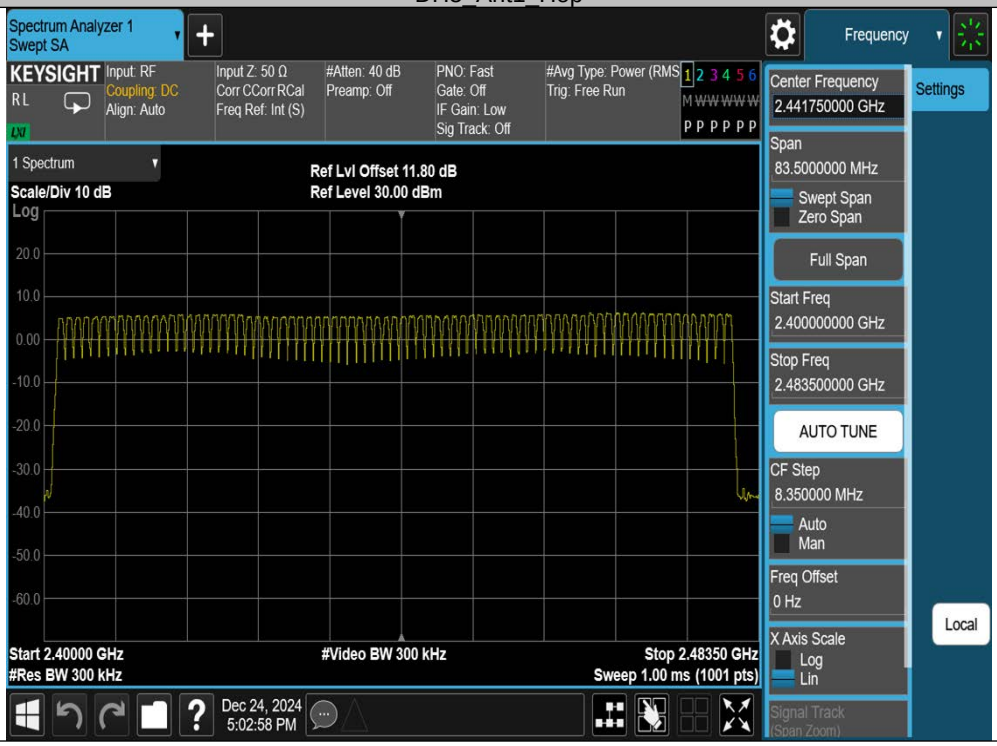

2DH5_Ant1_Hop

3DH5_Ant1_Hop

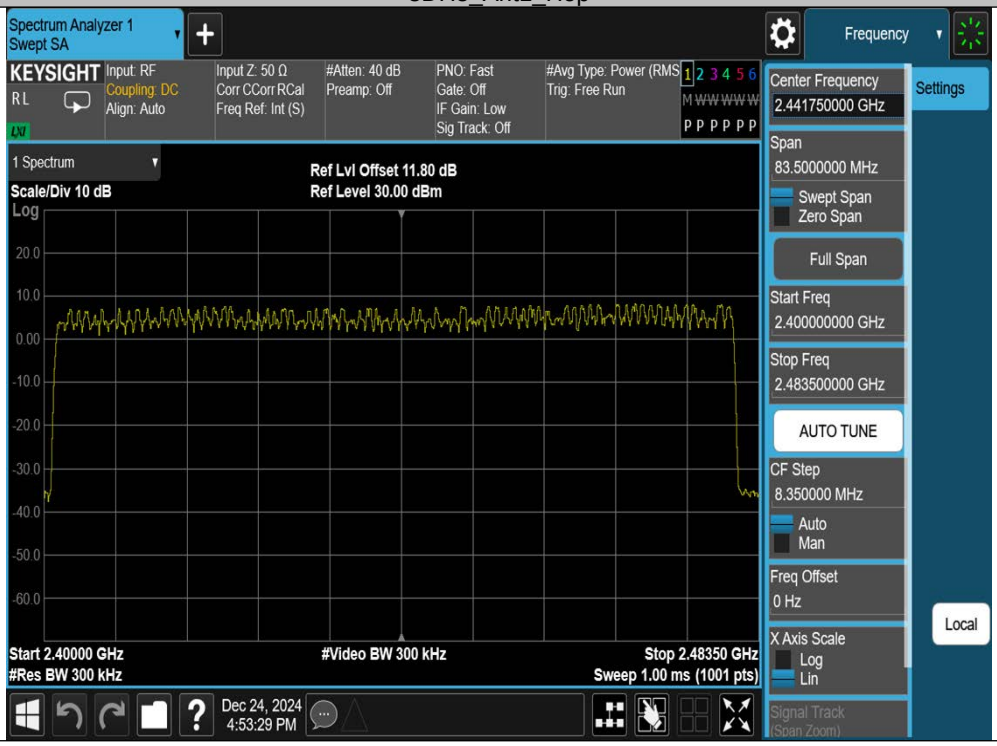

APPENDIX F - AVERAGE TIME OF OCCUPANCY

Test Mode	Antenna	Frequency[MHz]	BurstWidth [ms]	TotalHops [Num]	Result[s]	Limit[s]	Verdict
DH1	Ant1	Hop	0.381	320	0.122	≤0.4	PASS
DH3	Ant1	Hop	1.638	160	0.262	≤0.4	PASS
DH5	Ant1	Hop	2.885	107	0.308	≤0.4	PASS
2DH1	Ant1	Hop	0.390	320	0.125	≤0.4	PASS
2DH3	Ant1	Hop	1.642	160	0.263	≤0.4	PASS
2DH5	Ant1	Hop	2.891	107	0.308	≤0.4	PASS
3DH1	Ant1	Hop	0.390	320	0.125	≤0.4	PASS
3DH3	Ant1	Hop	1.640	160	0.262	≤0.4	PASS
3DH5	Ant1	Hop	2.892	107	0.308	≤0.4	PASS

Test Graphs

DH1_Ant1_Hop

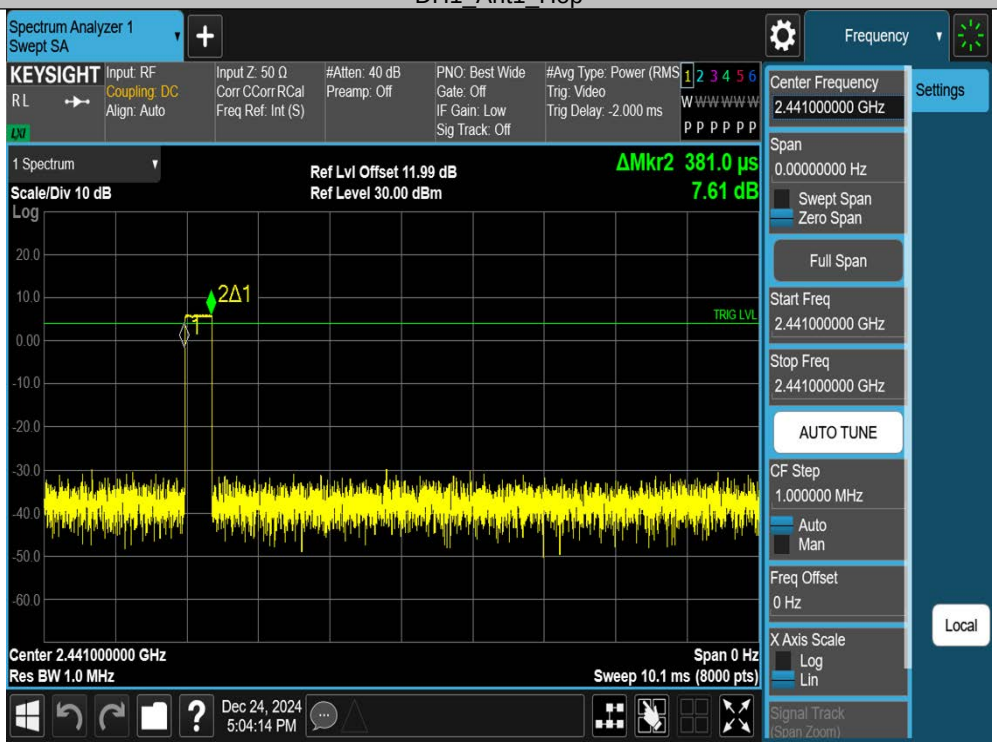

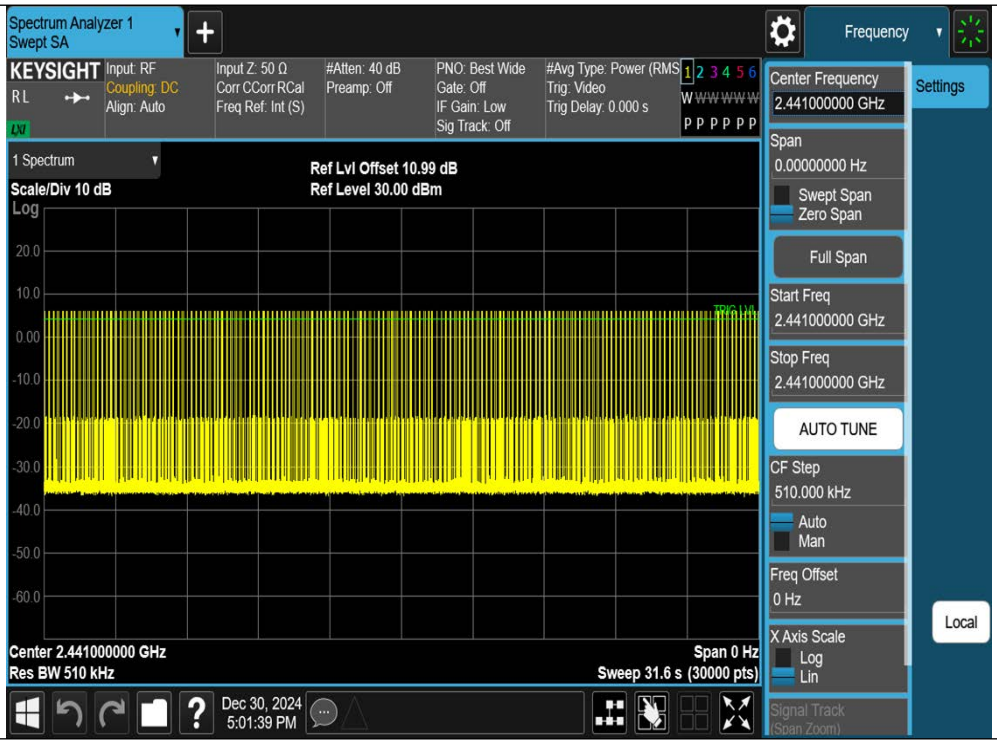

DH3_Ant1_Hop

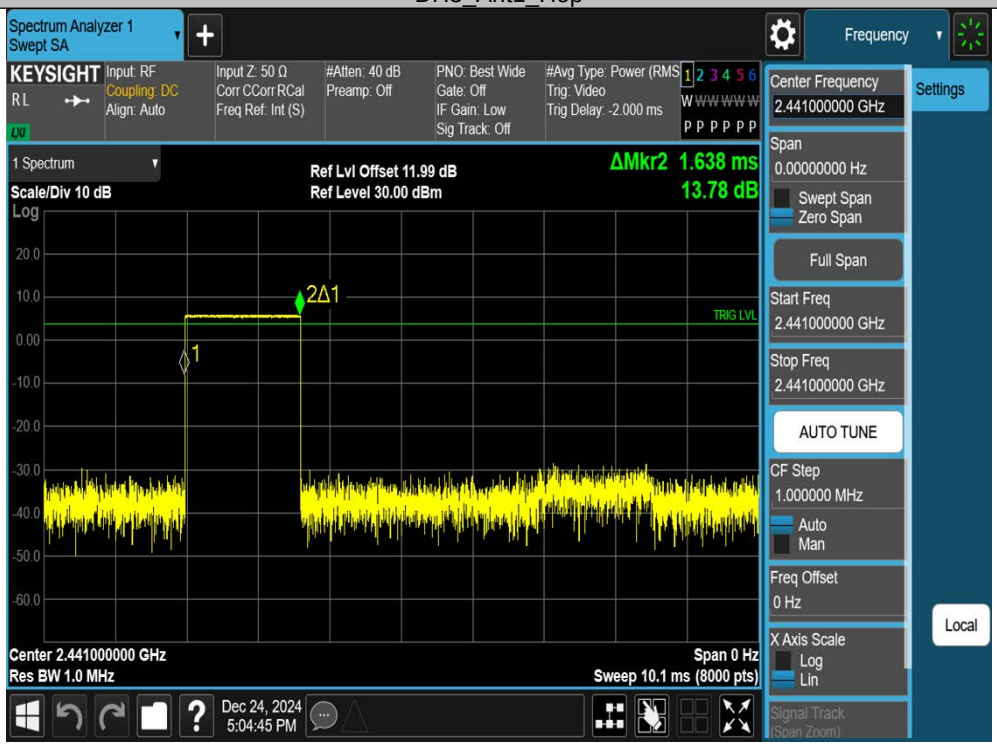
Spectrum Analyzer 1
Swept SA
KEYSIGHT
Input: RF
Coupling: DC
Align: Auto
Input Z: 50 Ω
Corr CCorr RCal
Freq Ref: Int (S)
#Atten: 40 dB
Preamp: Off
PNO: Best Wide
Gate: Off
IF Gain: Low
Sig Track: Off
#Avg Type: Power (RMS
Trig: Video
Trig Delay: -2.000 ms
1 Spectrum
Scale/Div 10 dB
Log
Ref Lvl Offset 11.99 dB
Ref Level 30.00 dBm
ΔMkr2 1.638 ms
13.78 dB
2Δ1
1
TRIG LVL
Center 2.441000000 GHz
Res BW 1.0 MHz
Span 0 Hz
Sweep 10.1 ms (8000 pts)
Dec 24, 2024
5:04:45 PM
Frequency
Settings
Center Frequency
2.441000000 GHz
Span
0.00000000 Hz
Swept Span
Zero Span
Full Span
Start Freq
2.441000000 GHz
Stop Freq
2.441000000 GHz
AUTO TUNE
CF Step
1.000000 MHz
Auto
Man
Freq Offset
0 Hz
X Axis Scale
Log
Lin
Local

Spectrum Analyzer 1
Swept SA
KEYSIGHT
Input: RF
Coupling: DC
Align: Auto
Input Z: 50 Ω
Corr CCorr RCal
Freq Ref: Int (S)
#Atten: 40 dB
Preamp: Off
PNO: Best Wide
Gate: Off
IF Gain: Low
Sig Track: Off
#Avg Type: Power (RMS
Trig: Video
Trig Delay: 0.000 s
1 Spectrum
Scale/Div 10 dB
Log
Ref Lvl Offset 10.99 dB
Ref Level 30.00 dBm
TRIG LVL
Center 2.441000000 GHz
Res BW 510 kHz
Span 0 Hz
Sweep 31.6 s (30000 pts)
Dec 30, 2024
5:03:23 PM
Frequency
Settings
Center Frequency
2.441000000 GHz
Span
0.00000000 Hz
Swept Span
Zero Span
Full Span
Start Freq
2.441000000 GHz
Stop Freq
2.441000000 GHz
AUTO TUNE
CF Step
510.000 kHz
Auto
Man
Freq Offset
0 Hz
X Axis Scale
Log
Lin
Local