# Product Manual

## Professional small weather station

WS3040 WS3030

## Contents


一. Function Introduction

二. Technical Parameters

三. On-screen instructions

四. Button description

五. Button settings

六. Assembly instructions

七. Steps for using the product

八. PC operation guidelines

九. Precautions

# 一、Precautions

1. weather station, detection functions are: indoor temperature, outdoor temperature,indoor humidity, outdoor humidity, wind speed, wind direction, air pressure, rainfall.

2. The machine comes with its own memory, and the data will be automatically overwritten after one year of storage.

3. This machine has special software for PC, which can read and consult historical data through data cable connection, and can also download data and store it on the PC side.

4. This machine is divided into indoor unit and outdoor unit, which is transmitted wirelessly through 433M frequency, and is unobstructed and interference-free within 100 meters.

5. The machine updates one piece of data every 40 seconds, and the machine stores one piece of historical data every 30 minutes.

# 二、Technical Parameters

## a. Parameters of indoor unit

1. Perpetual Calendar: Display Format: Year, Month, Day YY-MM-DD .
2. Clock display: Time display format: 24-hour format.
3. Temperature range: 0°C~60°C(32°F~140°F), resolution: 0.1°C, accuracy: ±2°C.
4. Humidity range: 20%~99%, resolution: 1%, accuracy: ±2%.
5. Air pressure range: 600~1100hpa, resolution: 0.1 hpa, accuracy: ±3 hpa.
6. Alarm clock: The clock flashes and the sound lasts for 1 minute.
7. Dry battery power supply: alkaline dry battery 3×LR6AA1.5V voltage. **(1.5V rechargeable batteries of each material can also be used)**
8. Battery life: about 3~4 months, please use external power supply when the backlight is often used to light up.
9. Power supply: USB data cable or power supply can be DC 5V .
10. Low voltage detection: icon flashes to indicate battery replacement.

## b. Parameters of outdoor unit

1. Temperature range: -40°C~60°C(-40°F~140°F), resolution: 0.1°C, accuracy: ±2°C.
2. Humidity range: 20%~99%, Resolution: 1%, Accuracy: ±2%.

3. Wind speed range: 0~50 m/s, 0-180 km/h, resolution: 0.1 m/s, accuracy: 10%;.
4. Wind direction: The wind direction is displayed in eight directions: E, S, W, N, SE, NE, SW, NW.
5. Rainfall range: 0~9999mm, Rain range: 0-393.6 inches, rainfall resolution: 0.4mm, ±10%;
6. Data transmission: data transmission frequency is once every 40 seconds.
7. Transmission mode: wireless 433MHz transmission, effective within 100 meters of transmission distance, (in the case of no obstruction and no interference).
8. Dry battery power supply: alkaline dry battery 3×LR6AA1.5V voltage. **(1.5V rechargeable batteries of each material can also be used) The solar panels are equipped with charging functions.**
9. Solar modules, which collect sunlight to increase the battery life;
10. Battery life: 4~6 months.
11. Low voltage detection: the icon flashes to prompt the battery to be replaced.
12. Waterproof Grade: Waterproof Level 3.

# 三、On-screen instructions

The LCD full display of this unit, after the user loads the battery, all the icons will be displayed for two seconds.

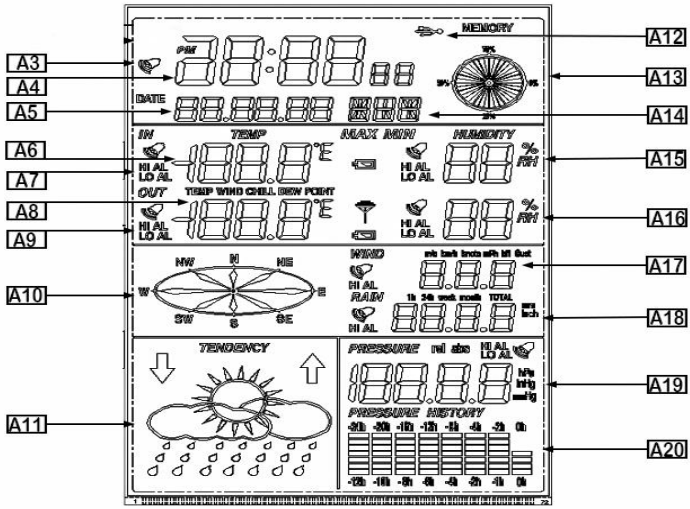


**A1.A2 . The option does not have this function**

**A3.** Alarm clock symbol, the user sets the alarm clock, and the alarm clock symbol will display the current one.

**A4.** The clock, the user can manually press the button to set,

**A5.** Perpetual calendar, users can manually press the button to set the perpetual calendar,

**A6.** Indoor temperature display, user can customize the setting unit, (°C/°F).

**A7.** Alarm display, users can customize the high alarm and low alarm.

**A8.** Outdoor temperature display, user can customize the setting unit, (°C/°F).

**A9.** Alarm display, users can customize high alarm and low alarm.

**A10.** Wind direction display, E, S, W, N, SE, NE, SW, NW eight directions.

**A11.** The cloud map shows that the climate change shows that it is cloudy, sunny, rainy, cloudy, and the trend changes.

**A12.** USB symbol, this product is connected to the computer through a USB data cable, that is, the USB symbol is displayed.

**A13.** Data storage display, the data storage status of the machine is displayed.

**A14.** Day of the week display, users can manually press the button to set.

**A15.** Humidity display, indoor humidity display, humidity high and low alarm can be customized.

**A16.** Humidity display, outdoor humidity display, humidity high and low alarm can be customized.

**A17.** Wind speed display, can be customized to set units, m/s, km/h, mph, knots, bft, wind speed alarm.

**A18.** Rainfall display, can be customized to set the unit, mm, inch, rainfall high and low alarm.

**A19.** Barometric pressure display, customizable setting unit, hPa, inHg, mmHg, high and low air pressure alarm.

**A20.** Barometric pressure histogram, customizable setting, 12-hour or 24-hour barometric pressure histogram.

# 四、Button description

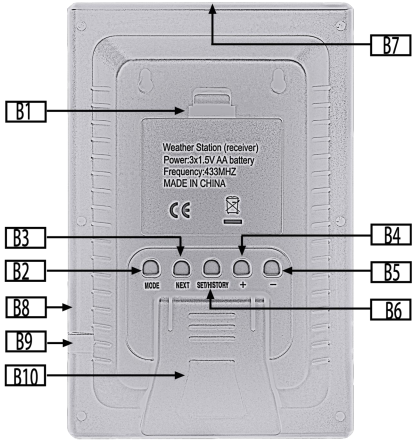


WS 3040

**B1.** Battery cover, battery compartment location.

**B2.** MODE function button, press and hold the MODE button for 3S seconds, and enter the setting mode when the time flashes, providing users with various function settings.

**B3.** NEXT button, in setup mode, short press the NEXT button to select a single function to repeat the cycle, providing user settings.

**B4.** + key, in setup mode, short press the + key to select data increment.

**B5:** - key, in setup mode, short press - key to select data decrement.

**B6.** SET/HISTORY key setting: After setting the alarm value in the alarm clock or high and low alarm mode, the user needs to short press the SET/HISTORY button, and the alarm symbol will be displayed on the screen to take effect, and the SET/HISTORY

button can also be short-pressed to cancel the alarm clock symbol in this mode.

**B6.** SET/HISTORY button to check historical data: In normal working mode, press and hold the SET/HISTORY button for 3 seconds The historical data in the upper right circle flashes and has entered the historical data mode, short press the ( - / + ) button to view the historical data.

**B7.** LIGHT touch key: short touch once can light up the backlight after 36 seconds of automatic extinguishing, long press for 3 seconds to listen to the backlight is always on, cancel the continuous light long press for 3 seconds to drop a sound, 36 seconds after the extinguishment. (It is not recommended to set steady on for battery power) .

**WS3030 The option does not have this function，(LIGHT touch key).**

**B8.** USB data port: connect to PC software through USB data cable to read the historical data stored by the product.
The user can power the product via a USB cable.

**B9.** DC: DC port users can use DC5V power supply to supply power to the product.

**B10.** Bracket: The product is placed on the support frame.

# Description of appearance

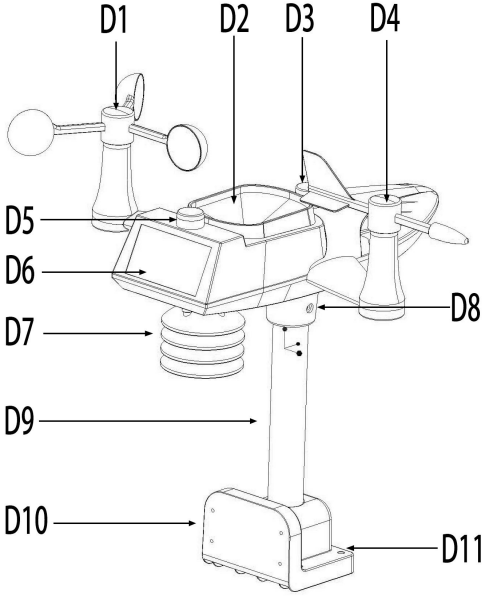


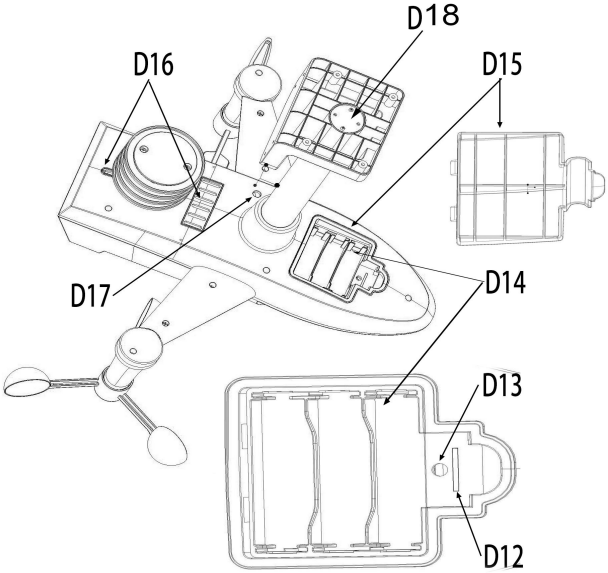


D1: Wind speed component, collecting wind speed and wind magnitude;

D2: Rainfall component, which collects rainfall;

D3: level, install this product to check the balancer;

D4: Wind direction component, collecting wind direction and azimuth changes;

**D5: Ultraviolet rays and illumination, this function is selective, equipped with indoor unit does not have this function;**

D6: Solar modules, which collect sunlight to increase the battery life;

**(1.5V rechargeable batteries of each material can also be used) The solar panels are equipped with charging functions.**

D7: sensor shield;

D8: Fixing hole for product and support rod screws;

D9: support rod;

D10: base;

D11: Base lock screw fixing position;

**D12: TF card, storing historical data, this function is optional, equipped with an indoor unit without this functionD13: Signal Emission Indicator;**

D14: battery compartment;

D15: battery cover;

D16: Rainfall outlet;

D17: Bluetooth external antenna;

D18: Base and support rod lock screw position;

# 五、Button settings

1. **Clock setting:** In boot mode, press and hold the (MODE) button for 3S seconds, at this time, you can see the screen clock number flashing, indicating that you have entered the clock setting mode, short press the (+/-) button to set the clock time, short press the (NEXT) button to enter the minute, short press the (+/-) button to set the minute, after the clock is set up, press and hold the (MODE) button for 3S seconds to save and exit to complete the setting.

2. **Time zone setting:** time difference can be set, in boot mode, long press (MODE) button for 3S seconds, at this time you see the screen clock digital flashing, indicating that you have entered the clock setting mode, every short press (NEXT) once to enter the minute, time zone, time zone default 08, short press (+ / -) key to set the time zone, after the time zone is set up, long press (MODE) button for 3S seconds to save and exit to complete the setting.

3. **Alarm setting and cancellation:** In boot mode, press and hold the (MODE) button for 3S seconds at this time, you can see the screen clock digital flashing, indicating that you have entered the clock setting mode, each short press (NEXT) button corresponds to the minute, time zone, alarm clock, clock, select the clock and minute to set the alarm clock, short press the (+ / -) button to complete the setting, the alarm clock needs to short press the (SET/HISTORY) button to see the alarm clock symbol, the alarm clock symbol setting takes effect, and the alarm clock symbol can also be canceled in this mode. If the alarm clock fails, press and hold the (MODE) button for 3S seconds to save and exit to complete the setting.

4. **Date setting:** In boot mode, press and hold the (MODE) button for 3S seconds, at this time, you can see the screen clock number flashing, indicating that you have entered the setting mode, and then short

press the (MODE) button once the date flashes and enters the date setting mode, each short press (NEXT) corresponds to the year, month and day to be set, short press the (+/-) button to complete the setting, and press and hold the (MODE) button for 3S seconds to save and exit to complete the setting.

5. **Temperature alarm and unit setting:** In the boot mode, press and hold the (MODE) button for 3S seconds, and see the screen clock digital flashing at this time, indicating that it has entered the setting mode; each short press (MODE) button will switch to date flashing --- temperature flashing, corresponding to the flashing temperature, each short press (NEXT) button to switch between temperature high alarm--- temperature low alarm--- temperature maximum display --- temperature minimum display --- temperature unit switching.
   Corresponding selection settings such as: high alarm --- low alarm --- unit (°C / °F), short press (+ / -) button to complete the setting, alarm needs to short press (SET/HISTORY) key to see the alarm clock symbol, display the alarm clock symbol setting takes effect, in this mode can also cancel the alarm symbol, alarm invalid, long press (MODE) button for 3S seconds to save and exit to complete the setting.

6. **Humidity alarm setting:** In the boot mode, press and hold the (MODE) button for 3S seconds, at this time, you can see the screen clock digital flashing, indicating that you have entered the setting mode; each short press (MODE) button will switch to date flashing--- temperature flashing--- humidity flashing, corresponding to the flashing humidity, each short press (NEXT) button to switch humidity high alarm--- humidity low alarm--- humidity maximum display --- humidity minimum display checkup.
   Corresponding selection of setting content, such as: high alarm--- low alarm, short press (+ / -) button to complete the setting, alarm needs to short press (SET/HISTORY) button to see the alarm symbol, display alarm clock symbol setting to take effect, in this mode can

also cancel the alarm symbol, alarm invalid, long press (MODE) button for 3S seconds to save and exit to complete the setting.

7. **Wind speed alarm and unit setting:** In the boot mode, press and hold the (MODE) button for 3S seconds, at this time, you can see the screen clock digital flashing, indicating that you have entered the setting mode; each short press (MODE) button will switch to date flashing--- temperature flashing--- humidity flashing--- wind speed flashing, corresponding to the flashing wind speed, each short press (NEXT) button to switch the wind speed high alarm --- wind speed unit setting. Units are set up (m/s, Km/h, mph, knots, bft),
   Corresponding selection settings such as: high alarm --- unit setting, short press (+ / -) key to complete the setting, alarm needs to short press (SET/HISTORY) button to see the alarm clock symbol, display alarm clock symbol setting takes effect, in this mode can also cancel the alarm symbol, alarm invalid, long press (MODE) button for 3S seconds to save and exit to complete the setting.

8. **Rain alarm and unit setting:** in the boot mode, press and hold the (MODE) button for 3S seconds, at this time, you can see the screen clock digital flashing, indicating that you have entered the setting mode; each short press (MODE) button will switch to date flashing--- temperature flashing--- humidity flashing--- wind speed flashing--- rainfall flashing, corresponding to the flashing rain, each short press (NEXT) button to switch the rainfall high alarm --- rainfall unit setting. Units are set up (mm, inch),
   Corresponding selection settings such as: high alarm --- unit setting, short press (+ / -) key to complete the setting, alarm needs to short press (SET/HISTORY) button to see the alarm clock symbol, display alarm clock symbol setting takes effect, in this mode can also cancel the alarm symbol, alarm invalid, long press (MODE) button for 3S seconds to save and exit to complete the setting.

9. **Barometric pressure alarm and unit setting:** In boot mode, press and hold the (MODE) button for 3S seconds, at this time, you can see the screen clock digital flashing, indicating that you have entered the setting mode; every short press (MODE) button will switch to date flashing--- temperature flashing---humidity flashing---wind speed flashing--- rainfall flashing--- barometric pressure flashing, corresponding to the flashing air pressure, Each short press (NEXT) button toggles the barometric pressure high alarm--- barometric low alarm--- barometric pressure 12-hour trend chart--- barometric pressure 24-hour trend chart--- barometric pressure unit setting. Units are set (hPa, inHg, mmHg).
   Corresponding selection settings such as: high alarm---low alarm--- unit setting, short press (+ / -) key to complete the setting, alarm needs to short press (SET/HISTORY) key to see the alarm clock symbol, display the alarm clock symbol setting takes effect, in this mode can also cancel the alarm symbol, alarm invalid, long press (MODE) button for 3S seconds to save and exit to complete the setting.

10. **Historical data review:** In normal working mode, press and hold the SET/HISTORY button for 3 seconds, at this time, the historical data in the upper right circle flashes and has entered the historical data mode, short press the (-/+) button to check the historical data.

# 六、Assembly instructions

1. **Product installation:** open the box, take out the product accessories, accessories package;
   Load the semi-circle of the wind speed standard in the direction of the semi-circle of the column, and lock the screws (see Figure A after installation);
   (The screws have been pre-locked at the factory, and the spare parts PA2.3*8mm are pre-provided in the accessory package);

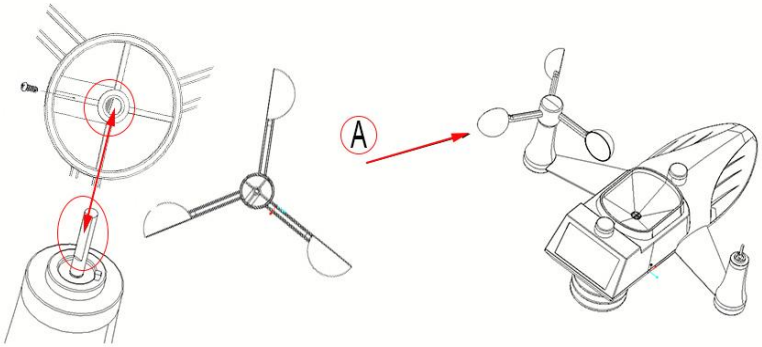


2. Insert the semi-circle of the wind vane in the direction of the semi-circle of the column, and lock the screws (see Figure B after installation);
   (The screws have been pre-locked at the factory, and the spare parts PA2.3*8mm are pre-provided in the accessory package);

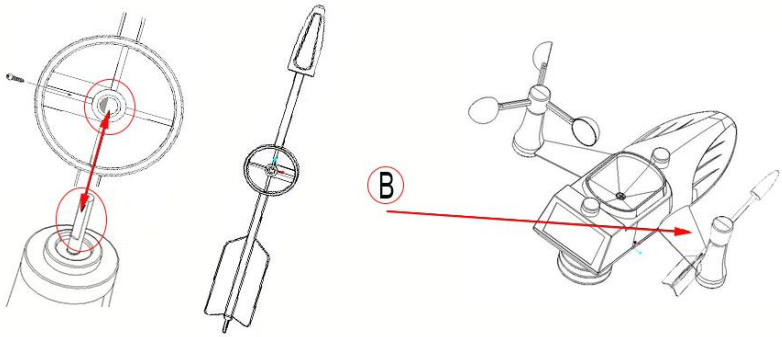

3. **Product installation:** take out the product and install the D9 support rod, lock the D8 aluminum sheet 20*8*2.5mm and M4*6mm screws; (The aluminum sheet and M4 screws are pre-locked in the D8 position at the factory);

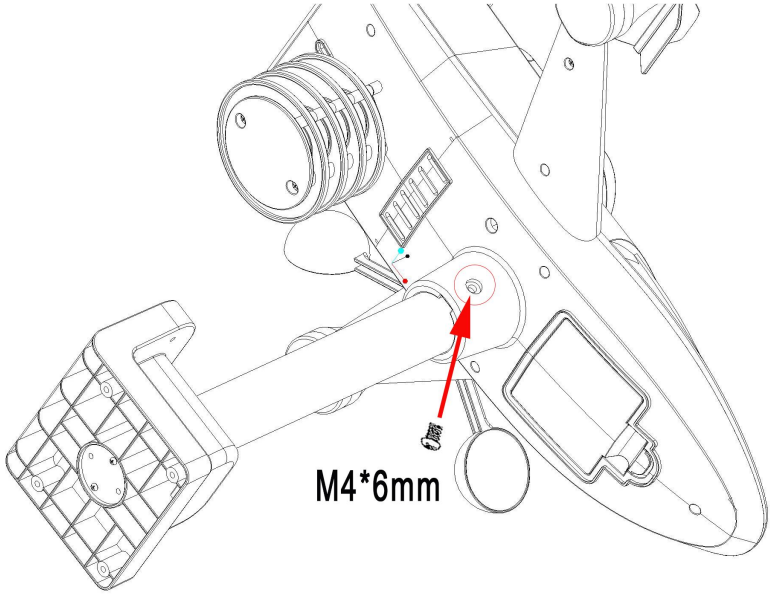


4. **Product installation:** Open the battery cover, and load 3 alkaline batteries LR6AA 1.5V corresponding to the positive and negative stages, at this time, see the D13 bit LED flashing 11 times in a row, which is normal for power-on, buckle the battery cover;

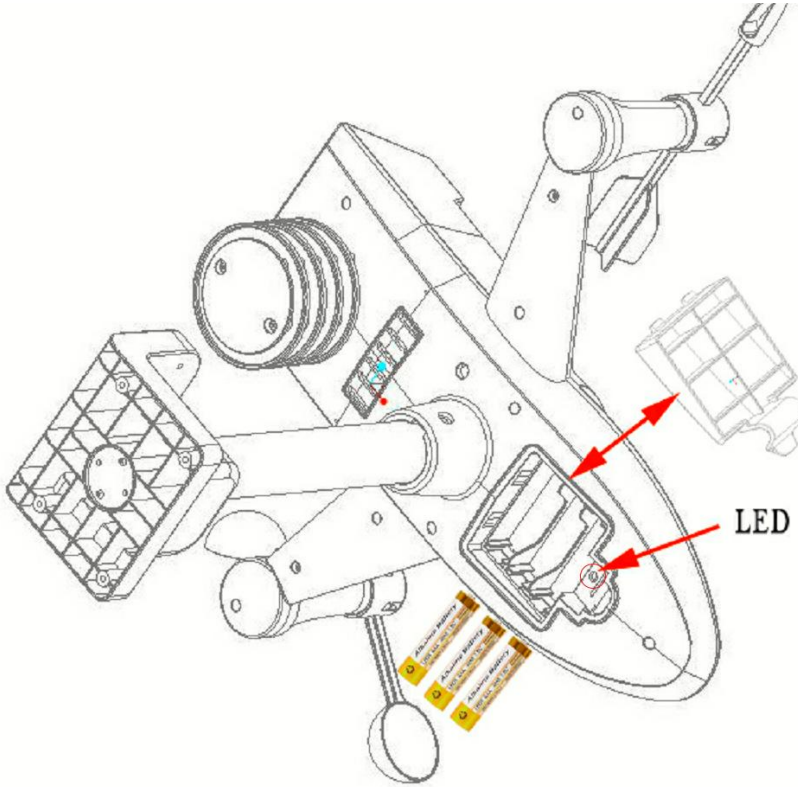


**5. The product is tested first and then installed and fixed:**

a. Product power supply: first install (indoor unit) battery or USB power supply, and then install (outdoor unit) battery;

b. Product connection: the indoor unit starts to search for signals, and the connection is successful within 3 minutes, and the indoor machine will display the temperature and humidity of the outdoor unit;If the search fails, press any key of the indoor unit to start the search (or power off and restart the power)

c. PC connection: (according to the 9 PC operation guidelines);

d. Normal performance: that is, it can be installed and used as a fixed outdoor unit;

## 6. Product installation and fixation:

a. There are N and arrow indication on the product shell, which corresponds to the positive direction of N installation during installation;

b. The upper shell of the solar panel has the word S, and the installation is in the positive direction of S, so that the solar energy can convert electrical energy more effectively;

c. Base mounting, can be fixed at the bottom or side, 4 screws KA4.0*40mm;

d. Base fixation: check the balance of the level;

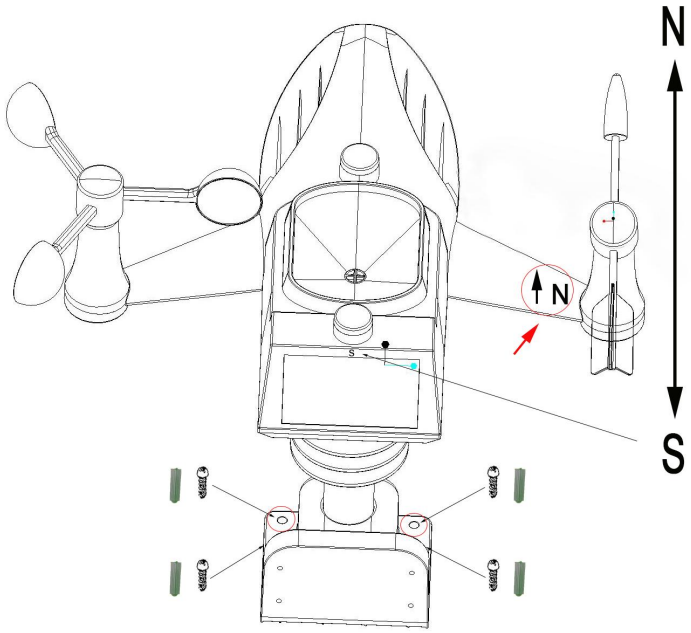


KA4.0*40mm *4

## 七、Steps for using the product(Sequential Steps)

1. Open the package, take out the product and accessories, and assemble the outdoor unit accessories, (according to the sixth content, the assembly instructions are completed).

2. Install the indoor unit battery or USB power supply, and then install the outdoor unit battery.

3. The indoor unit starts to search for the signal, and the connection is successful within 3 minutes, and the indoor machine will display the temperature and humidity of the outdoor unit.

4. According to the PC operation guide, download the PC software, connect the productto the PC with a data cable, and the product data can be seen on the PC.

5. When there is an abnormality in the product test, repeat the operation according to the content of the manual, or see the tenth note.

6 If the test performance of the product is normal, it can be installed and fixed.

   a. The indoor function can receive the data of the outdoor unit, and the product receives it normally.

   b. On the PC side, the product can be connected to the PC software through the USB data cable, and the PC software interface can be read to the product Product data, the product is connected to read the data normally;

# 八、PC operation guidelines

## 1. PC software download link.

**Website:** [http://app.meteorologyhk.com:8080/pcsoft/](http://app.meteorologyhk.com:8080/pcsoft/)

2. After the PC software is successfully downloaded, you can directly open **SmartWeather** without installation.
**(Anti-virus software and firewalls allow this software to run).**
**(PC software only supports windows system),**

3. The PC and the product use a **USB special data cable**, after the connection, the software will automatically read the data, and the blue color will be displayed to read the product data.

(Note: This PC-specific software is only available on PC)
Weathersoft SmartWeather

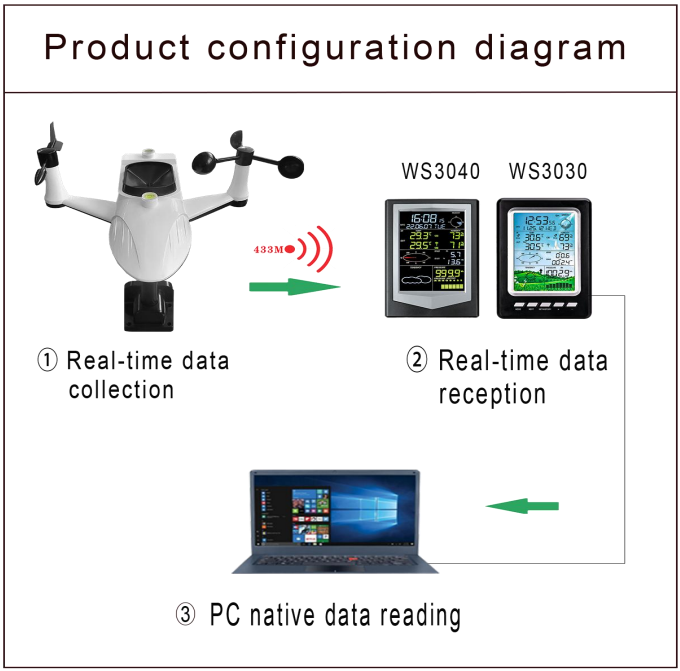

USB special data cable, after the connection, the software will automatically read the data, and the blue color will be displayed to read the product data.

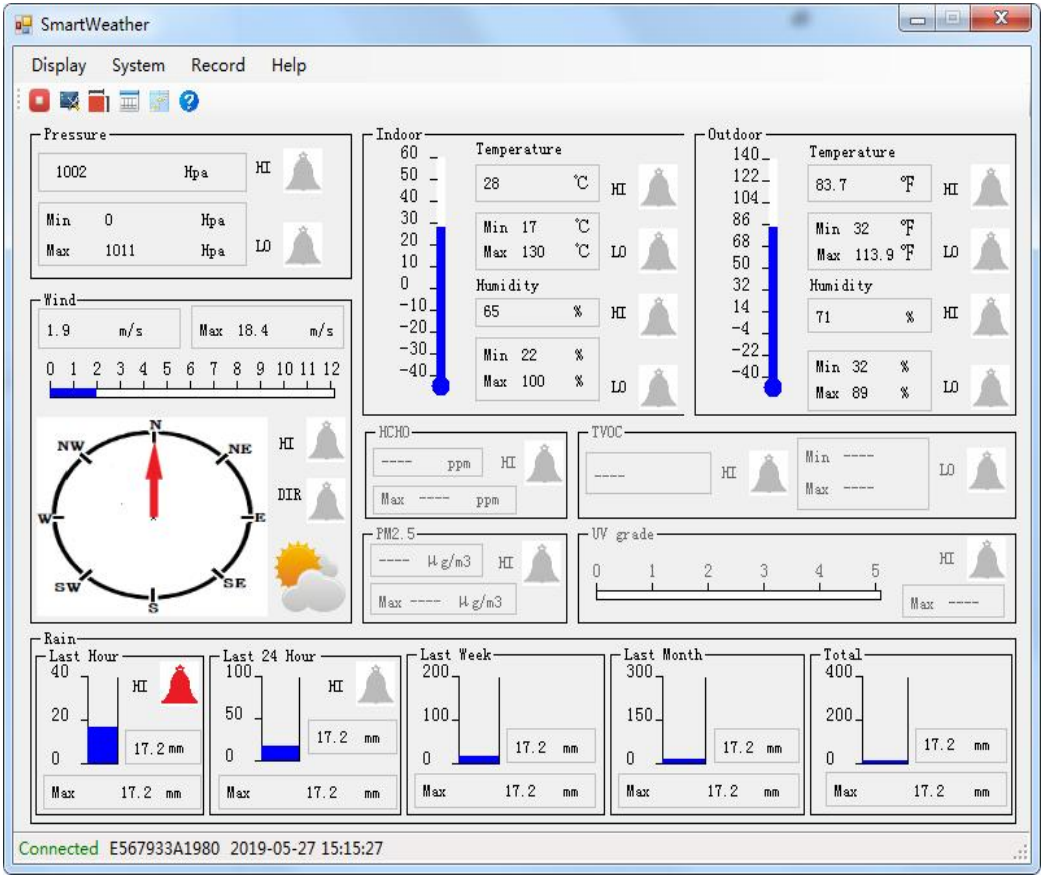

4. Data Review: Select 1 --- Record----2--- History---3--- Read---4--- Y.

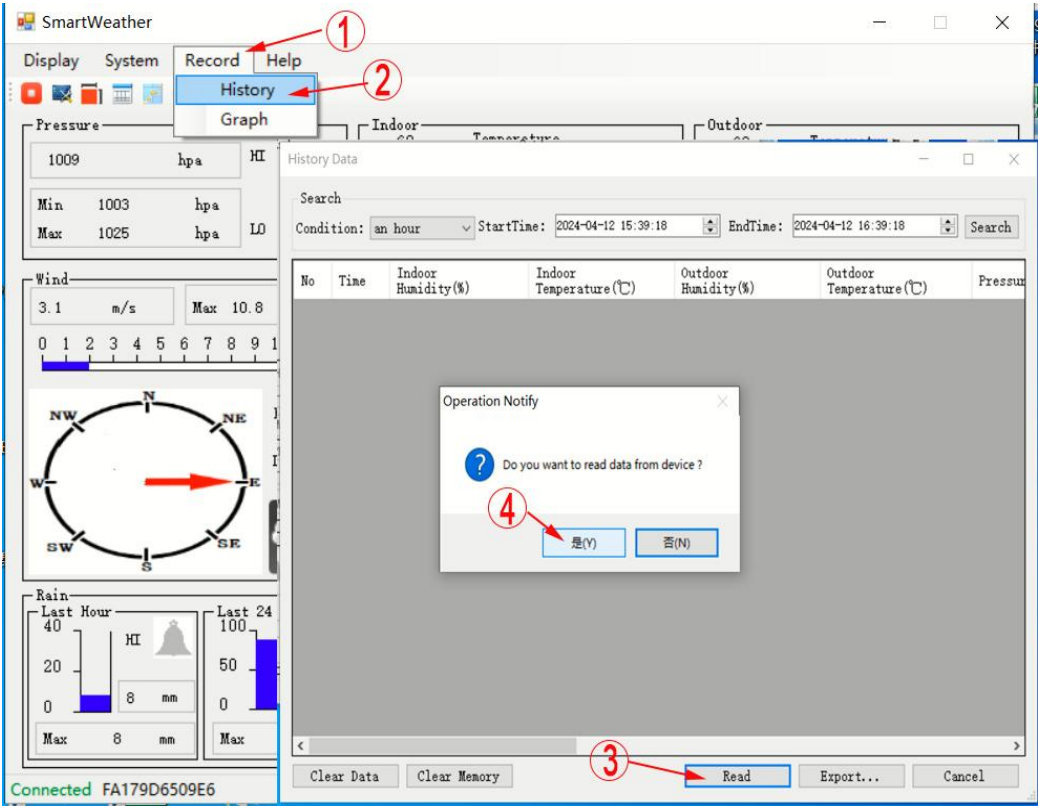

5. Select : 5 --- StartTime--- 6 --- Search, and choose to view each historical data at your discretion, one for 30 minutes.

**and choose to view each historical data at your discretion,**

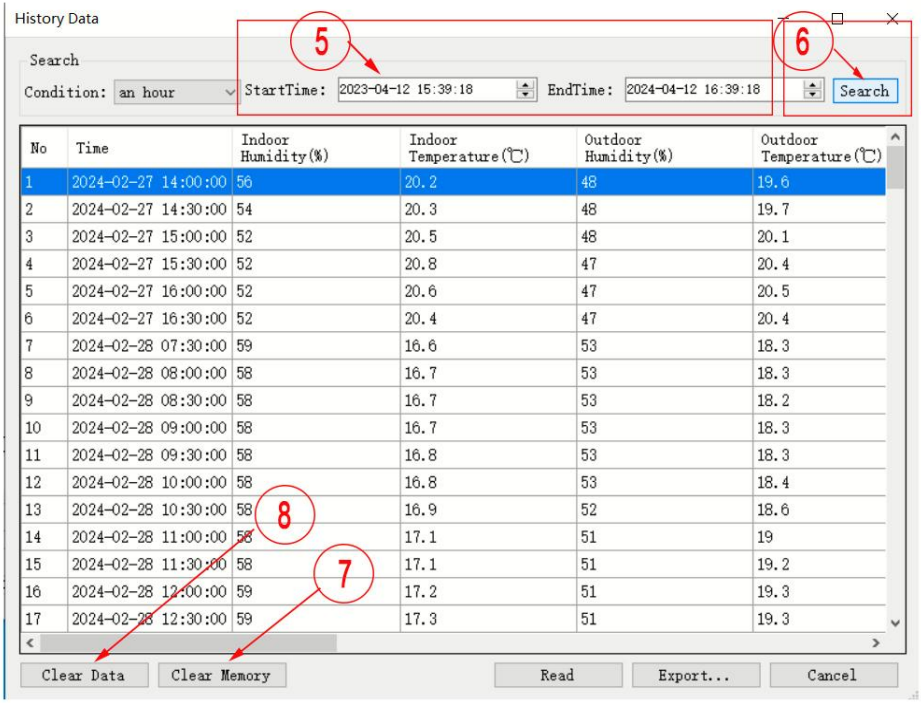


| No | Time | Indoor Humidity(%) | Indoor Temperature(℃) | Outdoor Humidity(%) | Outdoor Temperature(℃) |
|---|---|---|---|---|---|
| 1 | 2024-02-27 14:00:00 | 56 | 20.2 | 48 | 19.6 |
| 2 | 2024-02-27 14:30:00 | 54 | 20.3 | 48 | 19.7 |
| 3 | 2024-02-27 15:00:00 | 52 | 20.5 | 48 | 20.1 |
| 4 | 2024-02-27 15:30:00 | 52 | 20.8 | 47 | 20.4 |
| 5 | 2024-02-27 16:00:00 | 52 | 20.6 | 47 | 20.5 |
| 6 | 2024-02-27 16:30:00 | 52 | 20.4 | 47 | 20.4 |
| 7 | 2024-02-28 07:30:00 | 59 | 16.6 | 53 | 18.3 |
| 8 | 2024-02-28 08:00:00 | 58 | 16.7 | 53 | 18.3 |
| 9 | 2024-02-28 08:30:00 | 58 | 16.7 | 53 | 18.2 |
| 10 | 2024-02-28 09:00:00 | 58 | 16.7 | 53 | 18.3 |
| 11 | 2024-02-28 09:30:00 | 58 | 16.8 | 53 | 18.3 |
| 12 | 2024-02-28 10:00:00 | 58 | 16.8 | 53 | 18.4 |
| 13 | 2024-02-28 10:30:00 | 58 | 16.9 | 52 | 18.6 |
| 14 | 2024-02-28 11:00:00 | 58 | 17.1 | 51 | 19 |
| 15 | 2024-02-28 11:30:00 | 58 | 17.1 | 51 | 19.2 |
| 16 | 2024-02-28 12:00:00 | 59 | 17.2 | 51 | 19.3 |
| 17 | 2024-02-28 12:30:00 | 59 | 17.3 | 51 | 19.3 |

6. Select 7---Clear Memory, the user can clear the historical data stored in the settings.
7. Select 8---Clear Data to clear the historical data read by the PC.

# 九、 Precautions

**1. Low Voltage Warning Problem:**

When the battery symbol flashes a warning, please replace the battery in time to avoid interruption of data reception.

**2. Unable to receive data from the outdoor unit:**

a. Check the distance of the outdoor unit, the 433MHZ frequency wireless transmission is effective within 100 meters, (measured without object blocking and no interference) if so, please shorten the installation distance.

b. Check the outdoor transmitter, put the battery into the LED and turn off when it flashes for 2 seconds, and it flashes 11 times in a row to work normally.

c. Install the receiver battery first, then install the transmitter battery, when the receiver does not receive data for 3 minutes, please press any button of the receiver to restart the reception.

**3. No rainfall problem:**

When the rain gauge collects 0.4 mm, the measuring device starts to work and records the rainfall data, and the rainfall is superimposed for a total of 30 minutes.After 30 minutes, the rainfall was cleared and the cycle was repeated.

**4. Historical Data Clearing:**

If you don't want the previous data, you can use a data cable to connect the machine and the dedicated PC software to clear the historical data. (See PC operation f)

(Note: The indoor unit does not receive the data of the outdoor unit, that is, there is no historical data display)

**5. Time zone difference problem:**

If there is a time zone difference in the region, it can be set in the indoor unit, press and hold the MODE button of the product for 3 seconds, the time display flashes, press the NEXT button to flip through at this time, and see the time zone to 08 words, such as the difference of 1 hour press + or - to set for 1 hour, and then press and hold the MODE for 3 seconds to exit and save, at this time the setting is successful.

**FCC Caution:**

This device complies with part 15 of the FCC Rules. Operation is subject to the following two conditions: (1) this device may not cause harmful interference, and (2) this device must accept any interference received, including interference that may cause undesired operation.

Any changes or modifications not expressly approved by the party responsible for compliance could void the user's authority to operate the equipment.

NOTE: This equipment has been tested and found to comply with the limits for a Class B digital device, pursuant to Part 15 of the FCC Rules. These limits are designed to provide reasonable protection against harmful interference in a residential installation. This equipment generates, uses and can radiate radio frequency energy and, if not installed and used in accordance with the instructions, may cause harmful interference to radio communications. However, there is no guarantee that interference will not occur in a particular installation.

If this equipment does cause harmful interference to radio or television reception,which can be determined by turning the equipment off and on, the user is encouraged to try to correct the interference by one or more of the following measures:

-- Reorient or relocate the receiving antenna.

-- Increase the separation between the equipment and receiver.

-- Connect the equipment into an outlet on a circuit different
from that to which the receiver is connected.

-- Consult the dealer or an experienced radio/TV technician for help.

To maintain compliance with FCC’s RF Exposure guidelines, This equipment should be installed and operated with minimum distance between 20cm the radiator your body: Use only the supplied antenna.