6.3 Maximum Conducted Output Power

Test Requirement:	47 CFR Part 15C Section 15.247 (b)(3)
Test Method:	ANSI C63.10 2013
Test Setup:	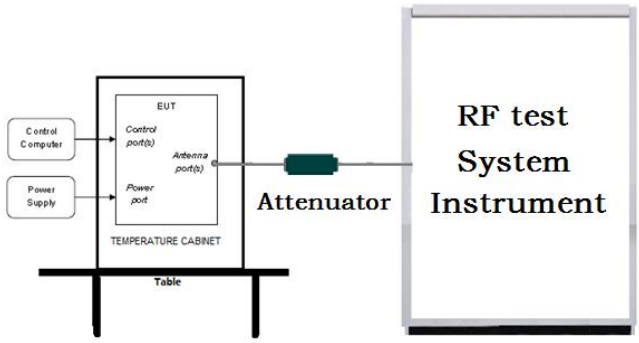 Remark: Offset=Cable loss+ attenuation factor.
Test Procedure:	a) Set the RBW ⩾ DTS bandwidth. b) Set VBW ⩾ 3 × RBW. c) Set span ⩾ 3 x RBW d) Sweep time = auto couple. e) Detector = peak. f) Trace mode = max hold. g) Allow trace to fully stabilize. h) Use peak marker function to determine the peak amplitude level.
Limit:	30dBm
Test Mode:	Refer to clause 5.3
Test Results:	Refer to Appendix：2.4G

6.4 DTS Bandwidth

Test Requirement:	47 CFR Part 15C Section 15.247 (a)(2)
Test Method:	ANSI C63.10 2013
Test Setup:	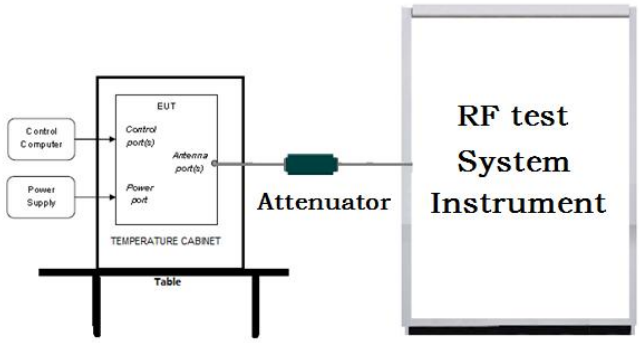 Remark: Offset=Cable loss+ attenuation factor.
Test Procedure:	a) Set RBW = 100 kHz. b) Set the VBW ⩾[3 × RBW]. c) Detector = peak. d) Trace mode = max hold. e) Sweep = auto couple. f) Allow the trace to stabilize. g) Measure the maximum width of the emission that is constrained by the frequencies associated with the two outermost amplitude points (upper and lower frequencies) that are attenuated by 6 dB relative to the maximum level measured in the fundamental emission.
Limit:	≥ 500 kHz
Test Mode:	Refer to clause 5.3
Test Results:	Refer to Appendix：2.4G

6.5 Maximum Power Spectral Density

Test Requirement:	47 CFR Part 15C Section 15.247 (e)
Test Method:	ANSI C63.10 2013
Test Setup:	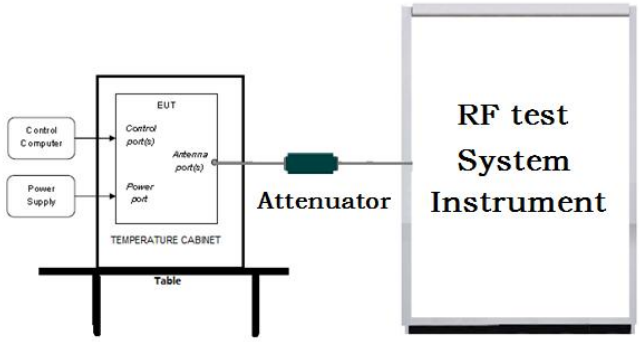 Remark: Offset=Cable loss+ attenuation factor.
Test Procedure:	a) Set analyzer center frequency to DTS channel center frequency. b) Set the span to 1.5 times the DTS bandwidth. c) Set the RBW to 3 kHz ⩽ RBW ⩽ 100 kHz. d) Set the VBW ⩾ [3 × RBW]. e) Detector = peak. f) Sweep time = auto couple. g) Trace mode = max hold. h) Allow trace to fully stabilize. i) Use the peak marker function to determine the maximum amplitude level within the RBW. j) If measured value exceeds requirement, then reduce RBW (but no less than 3 kHz) and repeat.
Limit:	≤8.00dBm/3kHz
Test Mode:	Refer to clause 5.3
Test Results:	Refer to Appendix：2.4G

6.6 Band Edge measurements and Conducted Spurious Emission

Test Requirement:	47 CFR Part 15C Section 15.247 (d)
Test Method:	ANSI C63.10 2013
Test Setup:	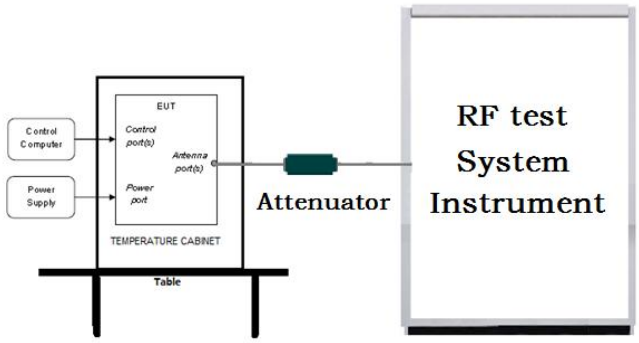 Remark: Offset=Cable loss+ attenuation factor.
Test Procedure:	a) Set RBW =100KHz. b) Set VBW = 300KHz. c) Sweep time = auto couple. d) Detector = peak. e) Trace mode = max hold. f) Allow trace to fully stabilize. g) Use peak marker function to determine the peak amplitude level.
Limit:	In any 100 kHz bandwidth outside the frequency band in which the spread spectrum intentional radiator is operating, the radio frequency power that is produced by the intentional radiator shall be at least 20 dB below that in the 100 kHz bandwidth within the band that contains the highest level of the desired power, based on either an RF conducted or a radiated measurement.
Test Mode:	Refer to clause 5.3
Test Results:	Refer to Appendix：2.4G

6.7 Radiated Spurious Emission & Restricted bands

Test Requirement:	47 CFR Part 15C Section 15.209 and 15.205
Test Method:	ANSI C63.10 2013
Test Site:	Measurement Distance: 3m (Semi-Anechoic Chamber)
Receiver Setup:	

Frequency	Detector	RBW	VBW	Remark
0.009MHz-0.090MHz	Peak	10kHz	30kHz	Peak
0.009MHz-0.090MHz	Average	10kHz	30kHz	Average
0.090MHz-0.110MHz	Quasi-peak	10kHz	30kHz	Quasi-peak
0.110MHz-0.490MHz	Peak	10kHz	30kHz	Peak
0.110MHz-0.490MHz	Average	10kHz	30kHz	Average
0.490MHz -30MHz	Quasi-peak	10kHz	30kHz	Quasi-peak
30MHz-1GHz	Quasi-peak	100 kHz	300kHz	Quasi-peak
Above 1GHz	Peak	1MHz	3MHz	Peak
	Peak	1MHz	10kHz	Average

Limit:

Frequency	Field strength (microvolt/meter)	Limit (dBuV/m)	Remark	Measurement distance (m)
0.009MHz-0.490MHz	2400/F(kHz)	-	-	300
0.490MHz-1.705MHz	24000/F(kHz)	-	-	30
1.705MHz-30MHz	30	-	-	30
30MHz-88MHz	100	40.0	Quasi-peak	3
88MHz-216MHz	150	43.5	Quasi-peak	3
216MHz-960MHz	200	46.0	Quasi-peak	3
960MHz-1GHz	500	54.0	Quasi-peak	3
Above 1GHz	500	54.0	Average	3

Note: 15.35(b), Unless otherwise specified, the limit on peak radio frequency emissions is 20dB above the maximum permitted average emission limit applicable to the equipment under test. This peak limit applies to the total peak emission level radiated by the device.

Test Setup:	

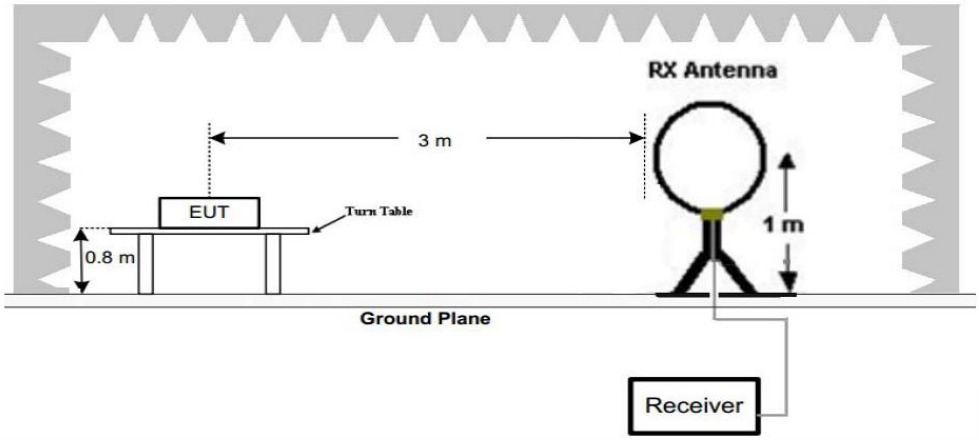

Figure 1. Below 30MHz

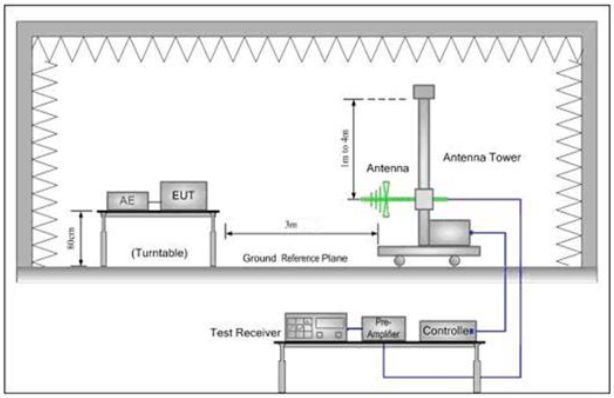

Figure 2. 30MHz to 1GHz

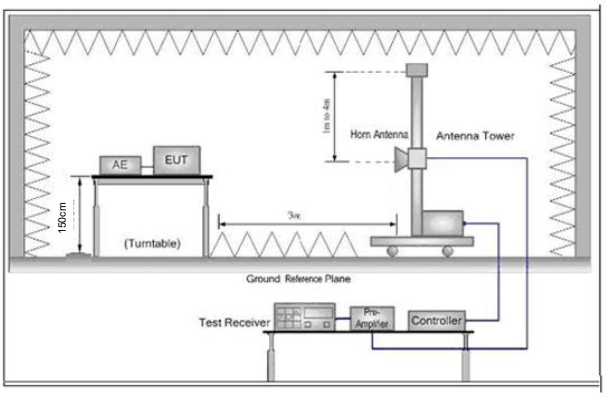

Figure 3. Above 1 GHz

Test Procedure:	a. 1) Below 1G: The EUT was placed on the top of a rotating table 0.8 meters above the ground at a 3 meter semi-anechoic camber. The table was rotated 360 degrees to determine the position of the highest radiation. 2) Above 1G: The EUT was placed on the top of a rotating table 1.5 meters above the ground at a 3 meter semi-anechoic camber. The table was rotated 360 degrees to determine the position of the highest radiation. Note: For the radiated emission test above 1GHz: Place the measurement antenna away from each area of the EUT determined to be a source of emissions at the specified measurement distance, while keeping the measurement antenna aimed at the source of emissions at each frequency of significant emissions, with polarization oriented for maximum response. The measurement antenna may have to be higher or lower than the EUT, depending on the radiation pattern of the emission and staying aimed at the emission source for receiving the maximum signal. The final measurement antenna elevation shall be that which maximizes the emissions. The measurement antenna elevation for maximum emissions shall be restricted to a range of heights of from 1 m to 4 m above the ground or reference ground plane. b. The EUT was set 3 meters away from the interference-receiving antenna, which was mounted on the top of a variable-height antenna tower. c. The antenna height is varied from one meter to four meters above the ground to determine the maximum value of the field strength. Both

	horizontal and vertical polarizations of the antenna are set to make the measurement. d. For each suspected emission, the EUT was arranged to its worst case and then the antenna was tuned to heights from 1 meter to 4 meters (for the test frequency of below 30MHz, the antenna was tuned to heights 1 meter) and the rotatable table was turned from 0 degrees to 360 degrees to find the maximum reading. e. The test-receiver system was set to Peak Detect Function and Specified Bandwidth with Maximum Hold Mode. f. If the emission level of the EUT in peak mode was 10dB lower than the limit specified, then testing could be stopped and the peak values of the EUT would be reported. Otherwise the emissions that did not have 10dB margin would be re-tested one by one using peak, quasi-peak or average method as specified and then reported in a data sheet. g. Test the EUT in the lowest channel (2402MHz),the middle channel (2440MHz),the Highest channel (2480MHz) h. The radiation measurements are performed in X, Y, Z axis positioning for Transmitting mode, and found the X axis positioning which it is the worst case. i. Repeat above procedures until all frequencies measured was complete.
Test Mode:	Refer to clause 5.3
Test Results:	Pass

Radiated Spurious Emission below 1GHz:

During the test, the Radiates Emission from 30MHz to 1GHz was performed in all modes, only the worst case mode a was recorded in the report.

Horizontal:

Test Graph

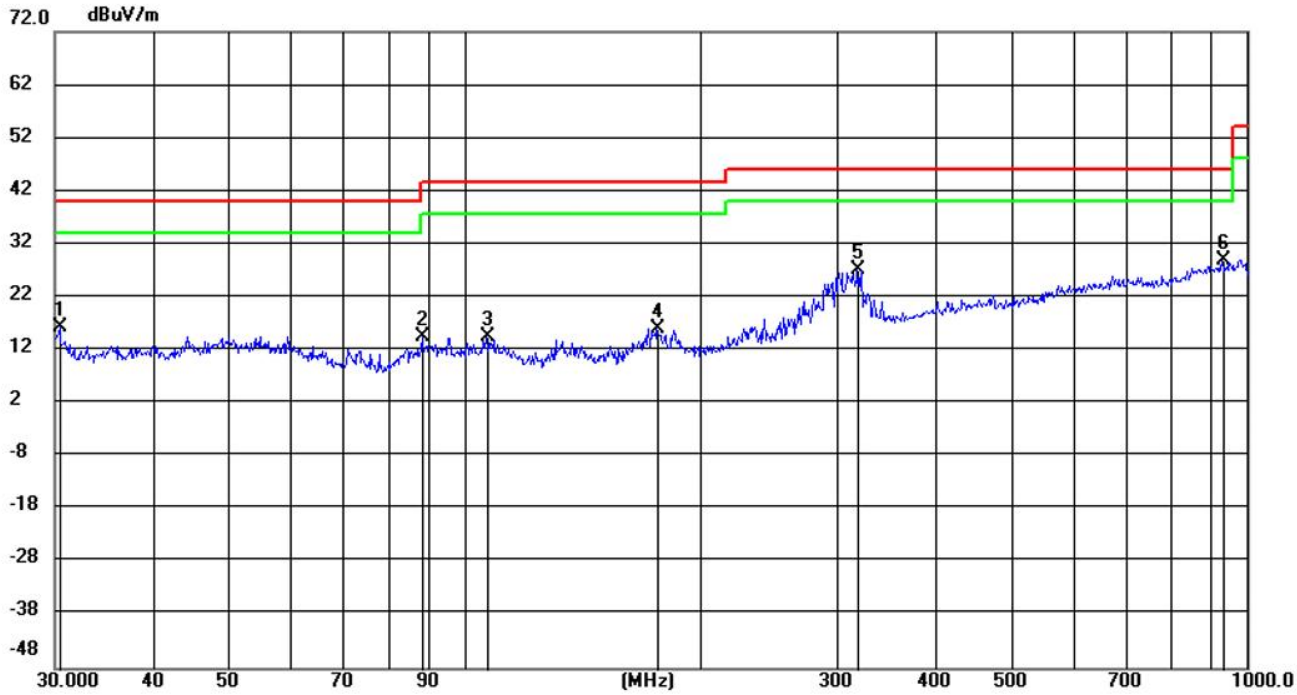

No.	Mk.	Freq.	Reading Level	Correct Factor	Measure-ment	Limit	Margin		Antenna Height	Table Degree	
		MHz	dBuV	dB/m	dBuV/m	dBuV/m	dB	Detector	cm	degree	Comment
1		30.4824	4.06	12.38	16.44	40.00	-23.56	QP	200	111	
2		88.4971	3.41	11.18	14.59	43.50	-28.91	QP	200	7	
3		107.0586	0.55	13.90	14.45	43.50	-29.05	QP	100	322	
4		176.7947	4.78	11.24	16.02	43.50	-27.48	QP	100	322	
5		318.2027	10.07	17.13	27.20	46.00	-18.80	QP	100	35	
6	*	932.2715	1.60	27.42	29.02	46.00	-16.98	QP	100	87	

Vertical:

Test Graph

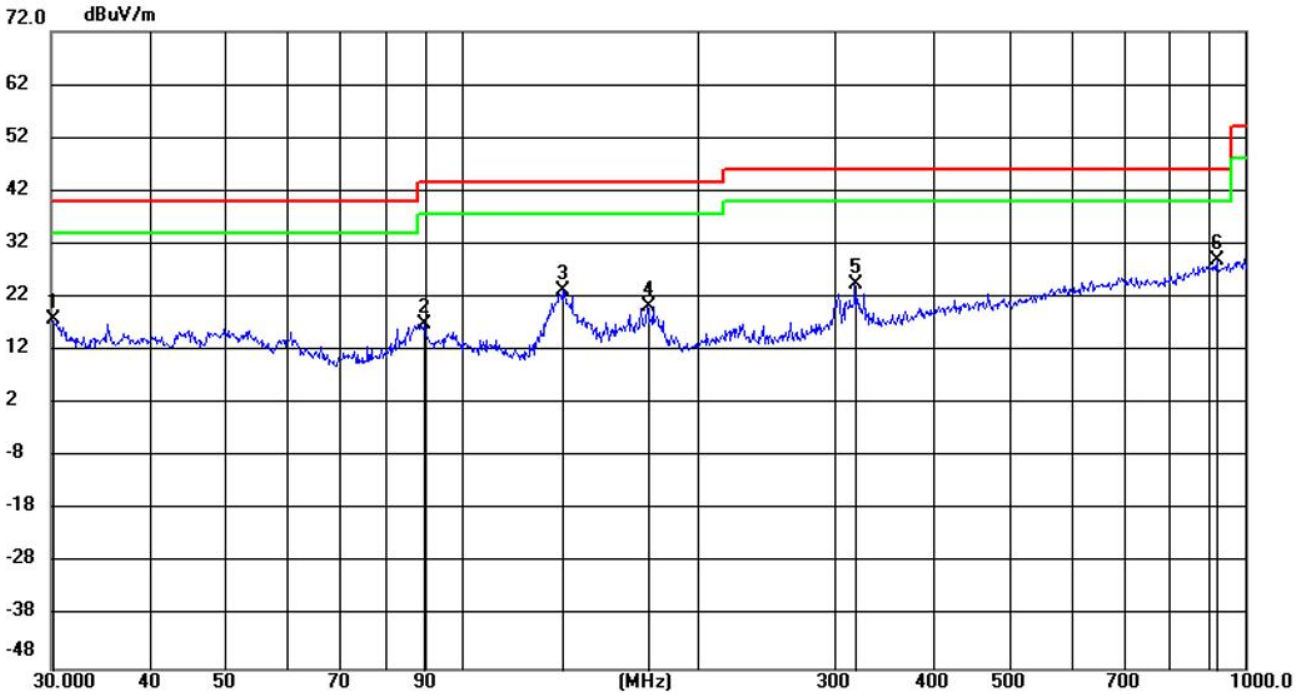

No.	Mk.	Freq.	Reading Level	Correct Factor	Measure-ment	Limit	Margin		Antenna Height	Table Degree	
		MHz	dBuV	dB/m	dBuV/m	dBuV/m	dB	Detector	cm	degree	Comment
1		30.1107	5.41	12.36	17.77	40.00	-22.23	QP	200	135	
2		89.7944	5.45	11.43	16.88	43.50	-26.62	QP	100	271	
3		134.6064	12.51	10.71	23.22	43.50	-20.28	QP	100	324	
4		172.9926	8.84	11.34	20.18	43.50	-23.32	QP	100	313	
5		318.2586	7.41	17.13	24.54	46.00	-21.46	QP	200	93	
6	*	921.5458	1.71	27.38	29.09	46.00	-16.91	QP	100	92	

Radiated Spurious Emission above 1GHz:

Mode:		2.4G Transmitting				Channel:		2420 MHz	
NO	Freq. [MHz]	Factor [dB]	Reading [dBμV]	Level [dBμV/m]	Limit [dBμV/m]	Margin [dB]	Result	Polarity	Remark
1	1264.8177	8.86	37.76	46.62	74.00	27.38	Pass	H	PK
2	1657.2438	12.15	36.69	48.84	74.00	25.16	Pass	H	PK
3	3331.5221	-12.85	53.87	41.02	74.00	32.98	Pass	H	PK
4	4840.9227	-10.38	57.11	46.73	74.00	27.27	Pass	H	PK
5	7260.384	-4.34	62.32	57.98	74.00	16.02	Pass	H	PK
6	10602.256	5.48	43.12	48.60	74.00	25.40	Pass	H	PK
7	1156.8105	10.19	38.36	48.55	74.00	25.45	Pass	H	AV
8	1606.4404	11.70	37.42	49.12	74.00	24.88	Pass	V	PK
9	3375.725	-13.02	54.01	40.99	74.00	33.01	Pass	V	PK
10	4846.7731	-10.37	56.34	45.97	74.00	28.03	Pass	V	PK
11	7260.384	-4.34	60.35	56.01	74.00	17.99	Pass	V	PK
12	9680.4954	1.61	45.99	47.60	74.00	26.40	Pass	V	PK
13	1156.8105	10.19	38.36	48.55	74.00	25.45	Pass	V	PK
14	7260.284	-4.34	39.18	34.84	54.00	19.16	Pass	V	AV

Mode:		2.4G Transmitting				Channel:		2440 MHz	
NO	Freq. [MHz]	Factor [dB]	Reading [dBμV]	Level [dBμV/m]	Limit [dBμV/m]	Margin [dB]	Result	Polarity	Remark
1	1350.0233	10.12	37.22	47.34	74.00	26.66	Pass	H	PK
2	1842.5895	15.14	36.43	51.57	74.00	22.43	Pass	H	PK
3	3684.4956	-12.71	52.06	39.35	74.00	34.65	Pass	H	PK
4	4880.5754	-9.82	58.58	48.76	74.00	25.24	Pass	H	PK
5	7320.188	-4.44	64.02	59.58	74.00	14.42	Pass	H	PK
6	10586.655	4.96	43.73	48.69	74.00	25.31	Pass	H	PK
7	7320.223	-4.44	40.37	35.93	54.00	18.07	Pass	H	AV
8	1156.9438	10.18	37.72	47.90	74.00	26.10	Pass	V	PK
9	1748.9833	13.04	36.93	49.97	74.00	24.03	Pass	V	PK
10	3327.6218	-12.91	54.48	41.57	74.00	32.43	Pass	V	PK
11	4879.9253	-9.83	58.81	48.98	74.00	25.02	Pass	V	PK
12	7320.188	-4.44	61.73	57.29	74.00	16.71	Pass	V	PK
13	9822.2048	3.09	44.54	47.63	74.00	26.37	Pass	V	PK
14	7320.278	-4.44	40.23	35.79	54.00	18.21	Pass	V	AV

Mode:		2.4G Transmitting				Channel:		2460 MHz	
NO	Freq. [MHz]	Factor [dB]	Reading [dBμV]	Level [dBμV/m]	Limit [dBμV/m]	Margin [dB]	Result	Polarity	Remark
1	1137.3425	9.99	37.83	47.82	74.00	26.18	Pass	H	PK
2	1691.1127	12.76	36.77	49.53	74.00	24.47	Pass	H	PK
3	3701.3968	-12.50	53.20	40.70	74.00	33.30	Pass	H	PK
4	4919.578	-11.04	59.01	47.97	74.00	26.03	Pass	H	PK
5	7379.342	-4.40	62.29	57.89	74.00	16.11	Pass	H	PK
6	11977.098	5.88	44.71	50.59	74.00	23.41	Pass	H	PK
7	7380.222	-4.40	40.94	36.54	54.00	17.46	Pass	H	AV
8	1121.8748	9.48	38.02	47.50	74.00	26.50	Pass	V	PK
9	1443.0962	10.62	38.00	48.62	74.00	25.38	Pass	V	PK
10	3449.1799	-12.63	54.26	41.63	74.00	32.37	Pass	V	PK
11	4920.228	-11.09	58.52	47.43	74.00	26.57	Pass	V	PK
12	7380.642	-4.40	62.12	57.72	74.00	16.28	Pass	V	PK
13	10883.725	5.19	43.62	48.81	74.00	25.19	Pass	V	PK
14	7380.257	-4.40	40.86	36.46	54.00	17.54	Pass	V	AV

Remark:

1) The field strength is calculated by adding the Antenna Factor, Cable Factor & Preamplifier. The basic equation with a sample calculation is as follows:

   Final Test Level =Receiver Reading + Antenna Factor + Cable Factor – Preamplifier Factor

2) Scan from 9kHz to 25GHz, the disturbance above 10GHz and below 30MHz was very low. As shown in this section, for frequencies above 1GHz, the field strength limits are based on average limits. However, the peak field strength of any emission shall not exceed the maximum permitted average limits specified above by more than 20 dB under any condition of modulation. So, only the peak measurements were shown in the report.

Restricted bands:

Test plot as follows:

Mode:	2.4G Transmitting	Channel:	2420
Remark:	23.5°C56.9%\		

Test Graph

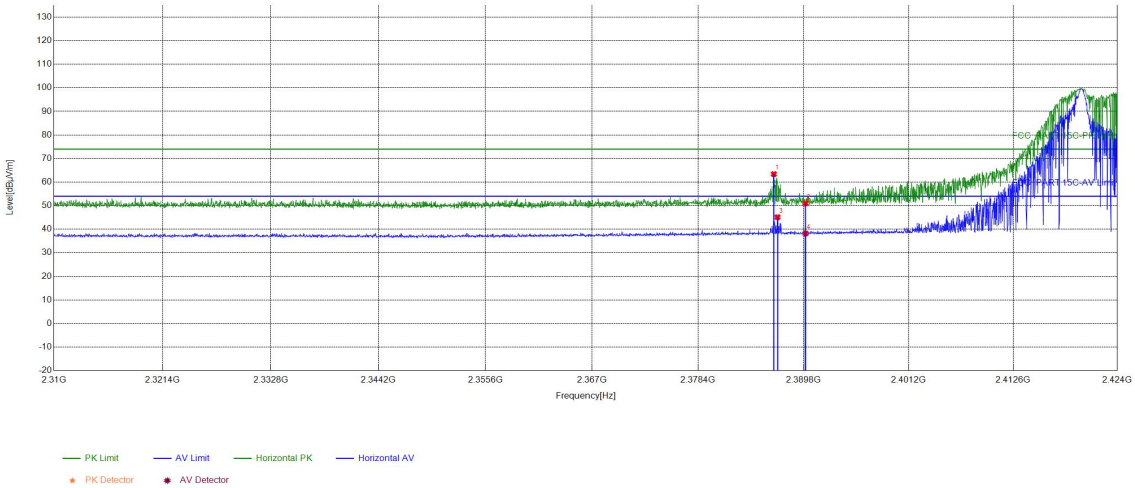

Suspected List									
NO	Freq. [MHz]	Factor [dB]	Reading [dBμV]	Level [dBμV/m]	Limit [dBμV/m]	Margin [dB]	Result	Polarity	Remark
1	2386.57	15.19	48.20	63.39	74.00	10.61	PASS	Horizontal	PK
2	2390	15.31	35.69	51.00	74.00	23.00	PASS	Horizontal	PK
3	2386.96	15.20	29.92	45.12	54.00	8.88	PASS	Horizontal	AV
4	2390	15.31	22.89	38.20	54.00	15.80	PASS	Horizontal	AV

Mode:	2.4G Transmitting	Channel:	2420
Remark:	23.5°C56.9%\		

Test Graph

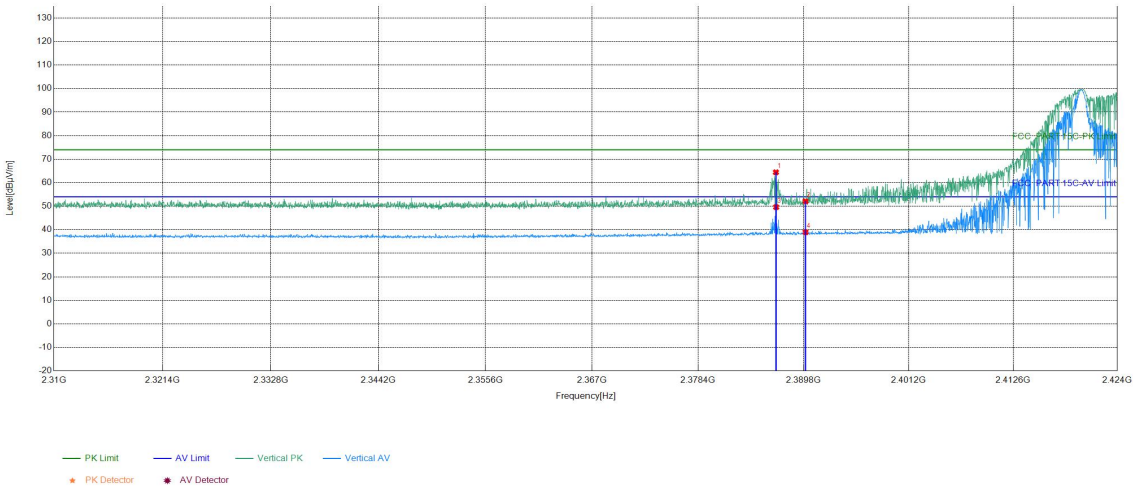

Suspected List									
NO	Freq. [MHz]	Factor [dB]	Reading [dBμV]	Level [dBμV/m]	Limit [dBμV/m]	Margin [dB]	Result	Polarity	Remark
1	2386.79	15.20	49.22	64.42	74.00	9.58	PASS	Horizontal	PK
2	2390	15.31	36.78	52.09	74.00	21.91	PASS	Horizontal	PK
3	2386.82	15.20	34.43	49.63	54.00	4.37	PASS	Horizontal	AV
4	2390	15.31	23.66	38.97	54.00	15.03	PASS	Horizontal	AV

Mode:	2.4G Transmitting	Channel:	2460
Remark:	23.5°C56.9%\		

Test Graph

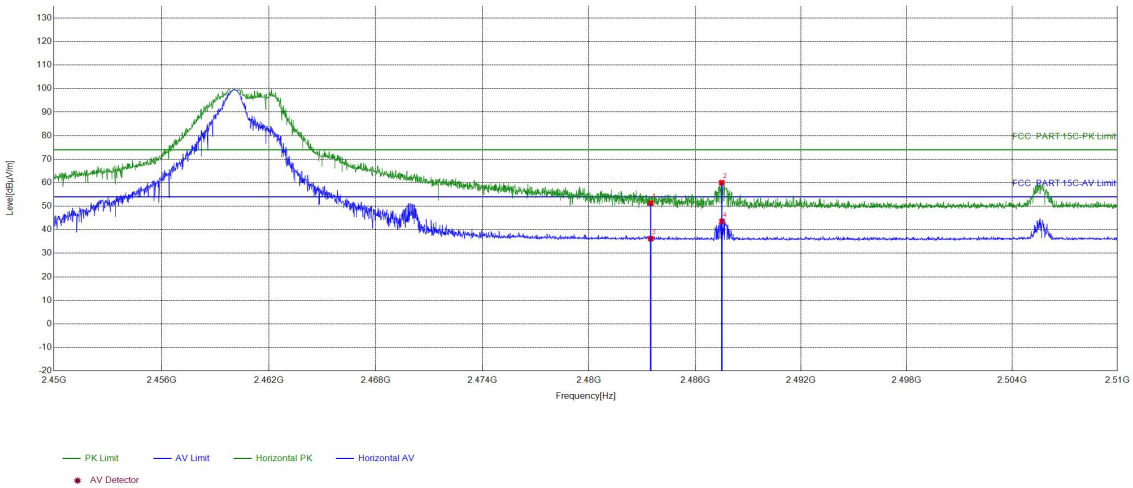

Suspected List									
NO	Freq. [MHz]	Factor [dB]	Reading [dBμV]	Level [dBμV/m]	Limit [dBμV/m]	Margin [dB]	Result	Polarity	Remark
1	2483.5	15.16	36.14	51.30	74.00	22.70	PASS	Horizontal	PK
2	2487.50	15.15	44.86	60.01	74.00	13.99	PASS	Horizontal	PK
3	2483.5	15.16	21.05	36.21	54.00	17.79	PASS	Horizontal	AV
4	2487.52	15.15	28.43	43.58	54.00	10.42	PASS	Horizontal	AV

Mode:	2.4G Transmitting	Channel:	2460
Remark:	23.5°C56.9%\		

Test Graph

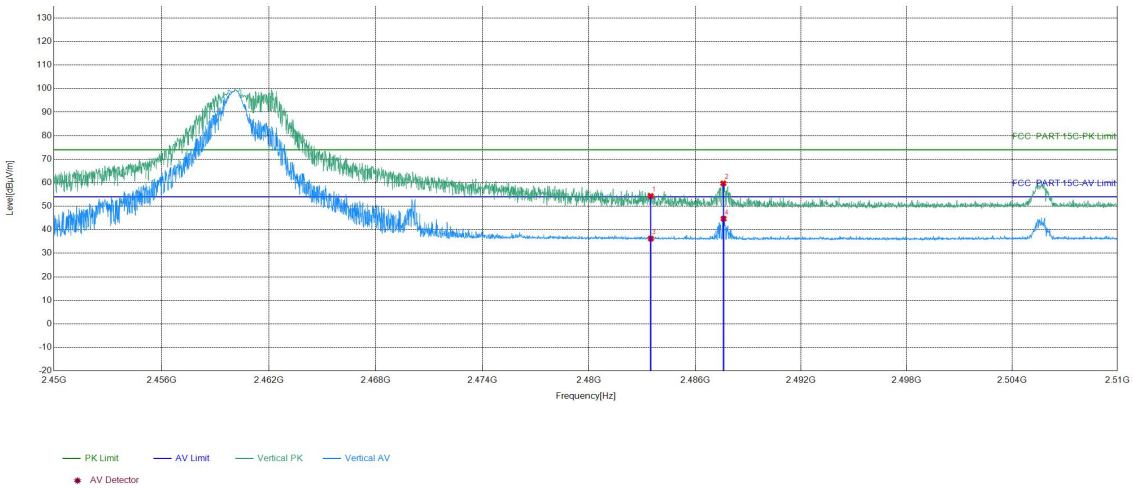

Suspected List									
NO	Freq. [MHz]	Factor [dB]	Reading [dBμV]	Level [dBμV/m]	Limit [dBμV/m]	Margin [dB]	Result	Polarity	Remark
1	2483.5	15.16	39.16	54.32	74.00	19.68	PASS	Horizontal	PK
2	2487.59	15.15	44.55	59.70	74.00	14.30	PASS	Horizontal	PK
3	2483.5	15.16	21.08	36.24	54.00	17.76	PASS	Horizontal	AV
4	2487.61	15.15	29.54	44.69	54.00	9.31	PASS	Horizontal	AV

Note:
The field strength is calculated by adding the Antenna Factor, Cable Factor & Preamplifier. The basic equation with a sample calculation is as follows:
Final Test Level =Receiver Reading -Correct Factor
Correct Factor = Preamplifier Factor– Antenna Factor–Cable Factor

7 Appendix A

Refer to Appendix: Bluetooth LE of EED32Q81904401.

Statement

1. This report is considered invalid without approved signature, special seal and the seal on the perforation;

2. The Company Name shown on Report and Address, the sample(s) and sample information was/were provided by the applicant who should be responsible for the authenticity which CTI hasn't verified;

3. The result(s) shown in this report refer(s) only to the sample(s) tested;

4. Unless otherwise stated,the decision rule for conformity reporting is based on Binary Statement for Simple Acceptance Rule stated in ILAC-G8:09/2019/CNAS-GL015:2022;

5. Without written approval of CTI, this report can't be reproduced except in full;

*** End of Report ***