Huizhou Tianyin Musical Instruments Co., Ltd
ROOM 1413, V1 BLDG., ZHONG LIANG V CITY, RENMIN 6TH, RD.,
HUIYANG, HUIZHOU, GUANGDONG, CHINA

SKYSONIC

Eg10 PRO
Multi-Function Guitar Speaker

Manual

INSTRUCTION

Thanks for your attention in our Multi-function Instrument Amplifier -EG10 PRO made by SKYSONIC, which holds High-fidelity origin sound.

Guitar SOLO
Main Five Tones: Clean,Acoustic, Solo,Overdrive and Distortion
BASS
Main Five Tones: Clean,Acoustic, Bass,Overdrive and Distortion

Reverb, Delay and Chorus, Improving the Tone Efficiently
Bluetooth Support, Volume adjustable.
Sound card, OTG Record and Live support, Headphone Monitor.
Jack suits for Computer, Sound card and other effect systems.

DIMENSION

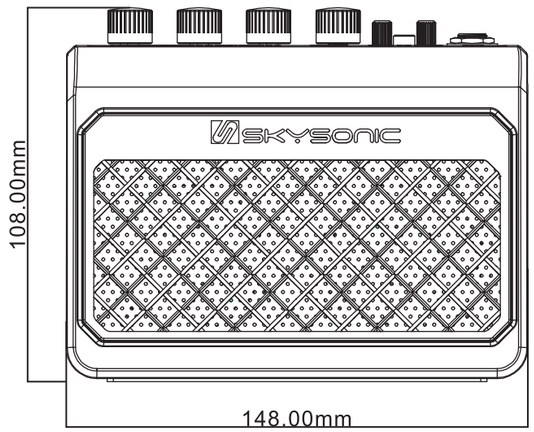

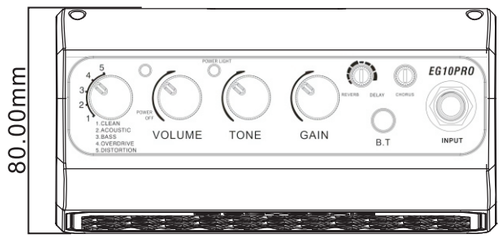

PARAMETER

Output Power	10 watt
Peak Power	15 watt
Loudspeaker	2.5 inch Full-frequency Speaker * 2
Battery Capacity	7.4V/3000mAh
Charge	DC5V/2A
Size（mm）	148*80*108
Color	Black, White, Blue, Pink, Green, Grey
Suitable Range	Acoustic Guitar, Electric Guitar, Bass

FRONT PANEL FUNCTIONS

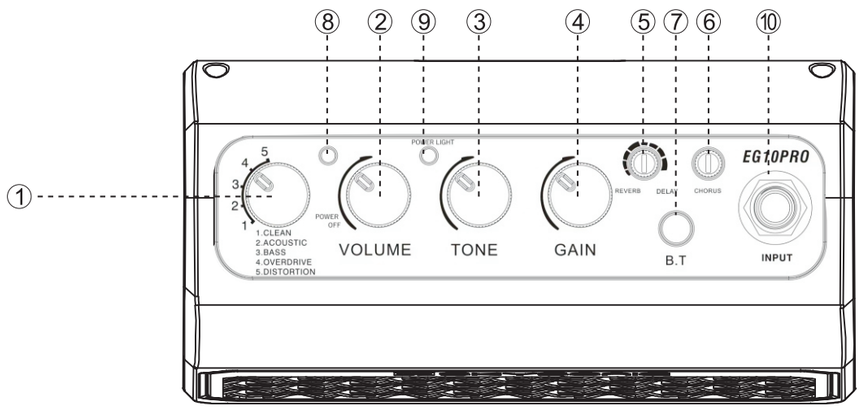

① Effects Switch【BASS】
This Switch is for adjusting the Effects and to Control the gain, Volume and tone.
CLEAN ACOUSTIC BASS OVERDRIVE DISTORTION
Effects Switch【Guitar SOLO】
This Switch is for adjusting the Effects and to Control the gain, Volume and tone.
CLEAN ACOUSTIC SOLO OVERDRIVE DISTORTION

② VOLUME Switch/Main Power Switch
Rotate the knob in clockwise to turn on the power or turn up the Volume, Otherwise it's to turn down the volume or turn off it.

③ TONE
Rotate the knob in clockwise to improve the tone, otherwise is to warm the tone

④ GAIN
Rotate the knob in clockwise to turn up the level, otherwise is to turn down it.

⑤ DELAY/REVERB
Rotate the knob in clockwise to turn up the level of the Delay or Turn down the level, and rotate to the anticlockwise to Reverb or turn up the level.

⑥ CHORUS
Rotate the knob in clockwise to increase the reverb, Otherwise it's to decrease it, it can be added to use with any other effects in the meantime.

⑦ Bluetooth
Press and hold for 2 seconds to turn on the Bluetooth
Search the Bluetooth named EG10 PRO, the light blinks and in Blue when it's matching the signal, it's Blue after connecting successfully.

⑧ Power indicator Light
The light is BLUE when it's power on: The light blinks and in Blue when it's in low battery: the light is purple when it's charging.

⑨ Indicator of Bluetooth
The light blinks and in Blue when the Bluetooth is matching the signal, and it's BLUE when connected successfully.

⑩ INPUT
Plug the guitar, you can adjust the tone and effects as you like.

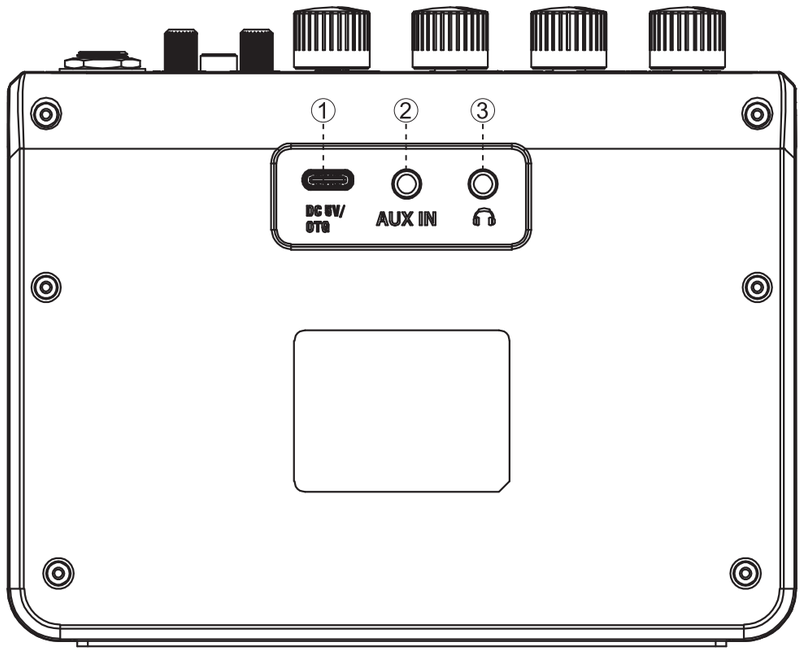

① 5V/2A Type-C Charge port/OTG record
Offer the Efficient and stable Charging experience, and support the OTG Digital Sound card recording, capture every notes perfectly and without any loss.

② AUX IN
Connect the external Audio equipment.

③ 3.5mm Headphone Audio output
For Audio Output, connect Headphone, Speaker, Amplifier ect. Equipment. Suggests to use High-quality Monitor Headphone.

USING GUIDANCE

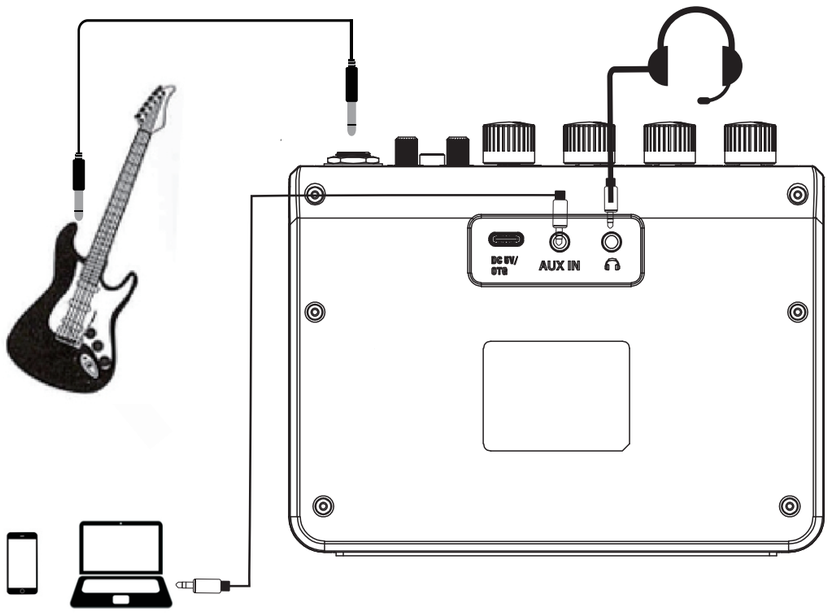

CHARGING GUIDANCE

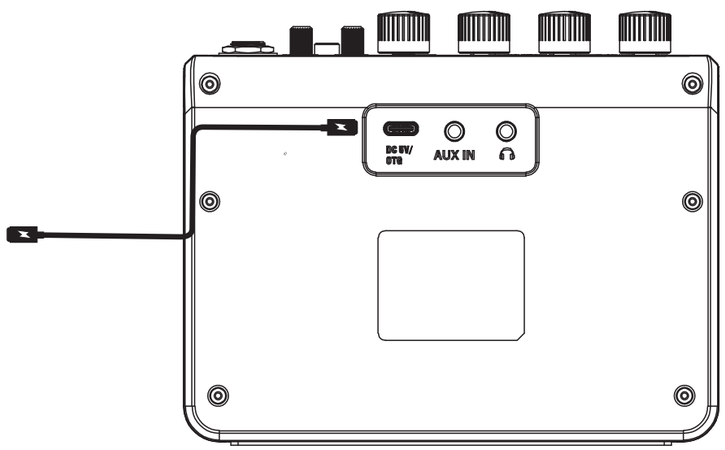

PRECAUTION

1. Please read the manual before using it.

2. There's Built-in Lithium Battery in this product, for further protection of this item, please charge it every six months to active it.

3.The unit is an precision electronic product, it will be regarded to give up the warranty if it's refit by self.

4.Please keep in Dry Condition, and keep it away from the extremely temperature.

5.Please keep the objects (e.g. flammable material, coin, pins), or any kind of liquids(water, soft drinks etc.) away from the item.

6.For Avoiding the noise and interference, please try to not use this item with other wireless products.

7.If you're going to not use this item for a long time, please turn off the power; if there's any needs of charging, please use the charger holds 5V/2A, if it's in low-battery, Please must turn off the power Before charging.

8.Please note and check the power situation unless 8 hours before the performance, to make sure the system can be used, please charge it every two or three months if you're going not to use it in a long time, please do not keep in turning on the power.

9.There's built-in battery in the product, to avoid the battery be in the high heat situation, please discard the used batteries in the certain places according to the law in your relative zone.

10.Please do not try to fix the product or change the parts, if there's any needs of helps, please contact the dealer, distributor or SKYSONIC Group for the technology support.

QUALITY ASSURANCE

A.Exchange Policy

a.Within a month from the day of customer buy the product, if there's problem like Functional issue of the item itself under the normal using situation, and keep the surface and package in good condition, customer can ask the distributor to change the product or get the new one.

b.Please show the receipt and Guarantee card to the distributor when you're asking to change the product or get the new one, otherwise, the distributor has right to refuse.

B.Warranty Policy

Within a year from buying the product, customer has the free after-sale service. We can offer the Paid maintenance service if the buying period is over 1 year or the product damaged by customer themselves or any other Force Majeure.

SKYSONIC reserves the right of final interpretation of the above warranty policy and keep the right of revising the above terms without any notice for the customers.

Inspector

Product's Name Multi-Function Guitar Speaker

Model EG10 PRO

Certificate of Quality

FCC Statement

This equipment has been tested and found to comply with the limits for a Class B digital device, pursuant to part 15 of the FCC Rules. These limits are designed to provide reasonable protection against harmful interference in a residential installation. This equipment generates, uses and can radiate radio frequency energy and, if not installed and used in accordance with the instructions, may cause harmful interference to radio communications. However, there is no guarantee that interference will not occur in a particular installation. If this equipment does cause harmful interference to radio or television reception, which can be determined by turning the equipment off and on, the user is encouraged to try to correct the interference by one or more of the following measures:

- Reorient or relocate the receiving antenna.
- Increase the separation between the equipment and receiver.
- Connect the equipment into an outlet on a circuit different from that to which the receiver is connected.
- Consult the dealer or an experienced radio/TV technician for help.

Caution: Any changes or modifications to this device not explicitly approved by manufacturer could void your authority to operate this equipment.

This device complies with part 15 of the FCC Rules. Operation is subject to the following two conditions: (1) This device may not cause harmful interference, and (2) this device must accept any interference received, including interference that may cause undesired operation.

RF Exposure Information

The device has been evaluated to meet general RF exposure requirement. The device can be used in portable exposure condition without restriction.