Nov 2021

Datasheet of PCBC Device

Printed Circuit Board with Ceramic Antenna

Manufacturer: Shenzhen Yongxin Information Technology Co., Ltd.

Manufacturer Address: 507 Kanghe Shanda Building, Shahe West Road, Shuguang Community, Xili Street, Nanshan District, Shenzhen

2400-2500 MHz

P/N: YSM3Y10

***Contents in this sheet are subject to change without prior notice.**

PCBC Antenna 3216 Size

1. Features

Antenna Frequency for 2400-2500 MHz

2. Applications

For Miniaturized Bluetooth System

3. Shapes & Dimensions(Unit : mm)

1). Component (Unit : mm):

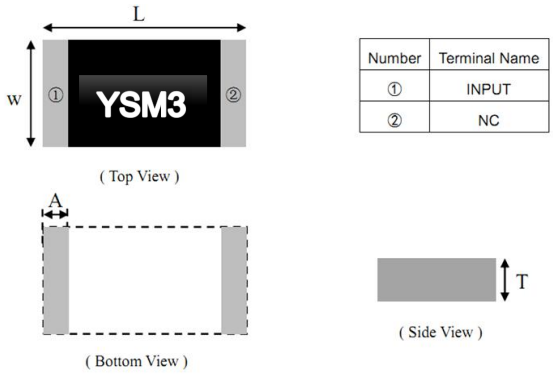

Number	Terminal Name
①	INPUT
②	NC

Symbols	L	W	T	A
Dimensions	3.2+/-0.2	1.6+/-0.2	1.0+/-0.1	0.4+/-0.1

2). PCB Top View (Unit : mm) :

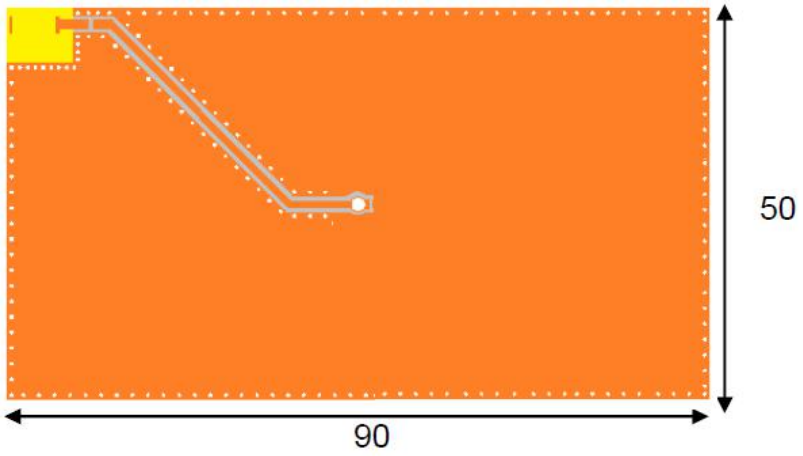

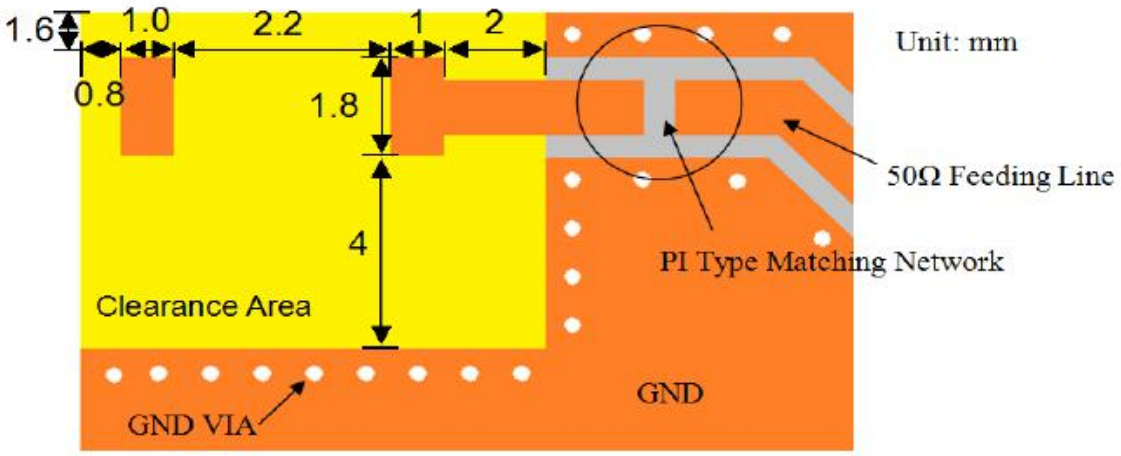

4. Evaluation Board and Matching Circuits

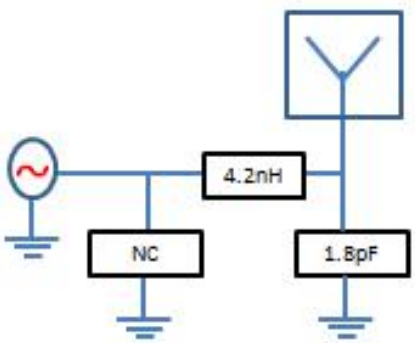

5. Electrical Characteristics

Part Number	YSM3Y10	
Central Frequency	2450	MHz
Bandwidth	±50 (Min.)	MHz
Return Loss	-10 (Max)	dB
Peak Gain	3.12	dBi
Impedance	50	Ohm
Polarization	Linear	
Azimuth Beamwidth	Omni-directional	

6. Returm Loss

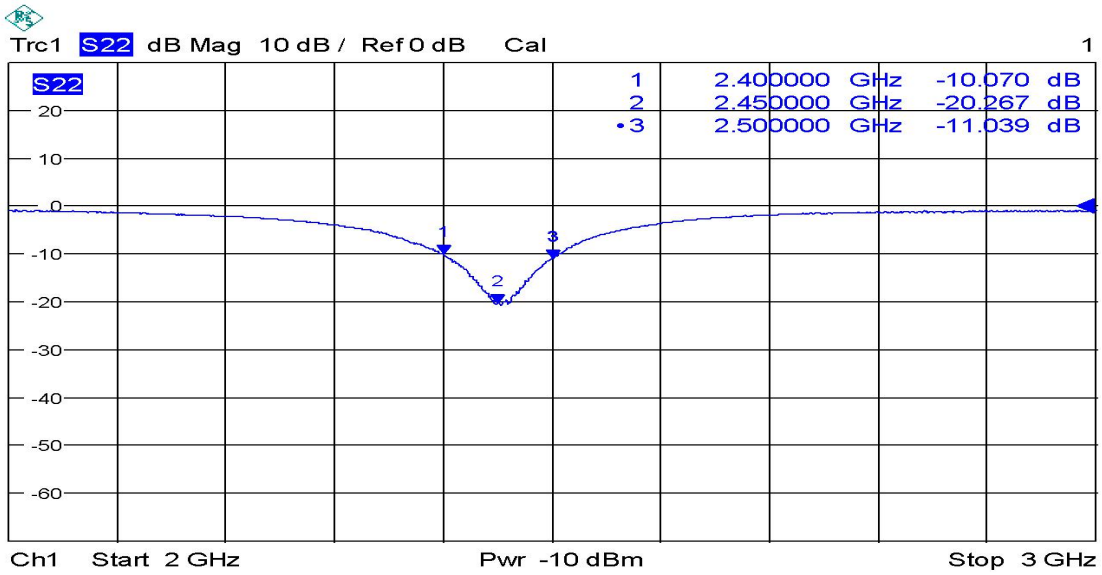

7. Radiation Pattern & Efficiency

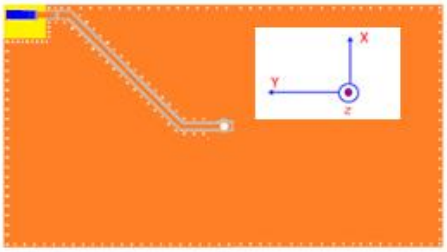

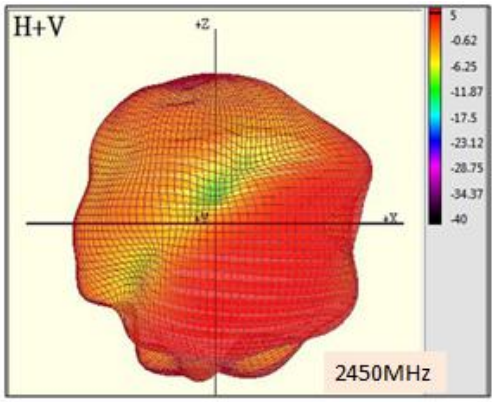

Frequency (MHz)	2400	2450	2500
Efficiency (dB)	-2.01	-1.43	-1.74
Efficiency (%)	63	72	67
Gain (dBi)	3.01	3.12	2.73

8. Reflow Soldering Standard Condition

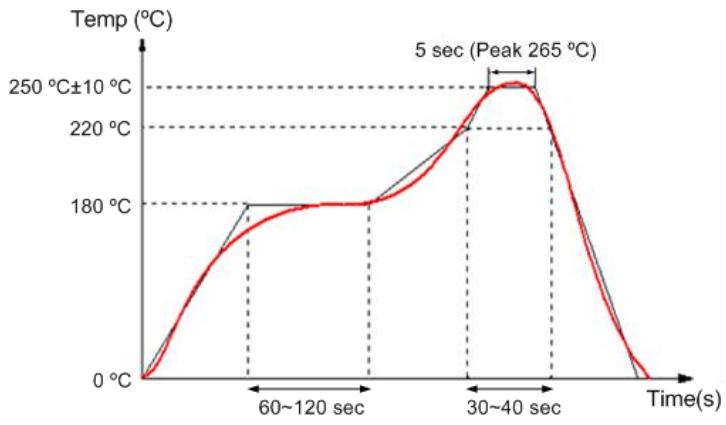

9. Packaging and Dimensions 3216 (3.2*1.6mm)

◆ **Plastic Tape**

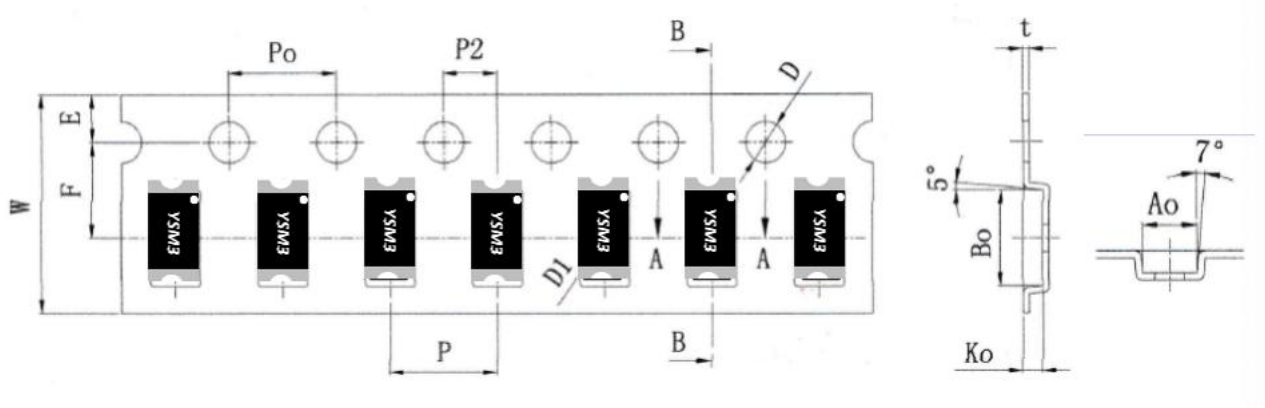

W	Ao	Bo	Ko	P	F	E	D0	D1	Po	P2	t
8.0 ±0.30	1.85 ±0.05	3.51 ±0.10	1.59 ±0.10	4.00 ±0.05	3.50 ±0.05	1.75 ±0.10	1.50 ±0.10	0.00 ±0.10	4.00 ±0.10	2.00 ±0.05	0.25 ±0.05

◆ **Remarks for Package**

Reserve a length of 150~200mm for the trailer of the carrier and 250~300 mm for the leader of the carrier and further 250mm of cover tape at the leading part of the carrier.

◆ **Reel (3000 pcs/Reel)**

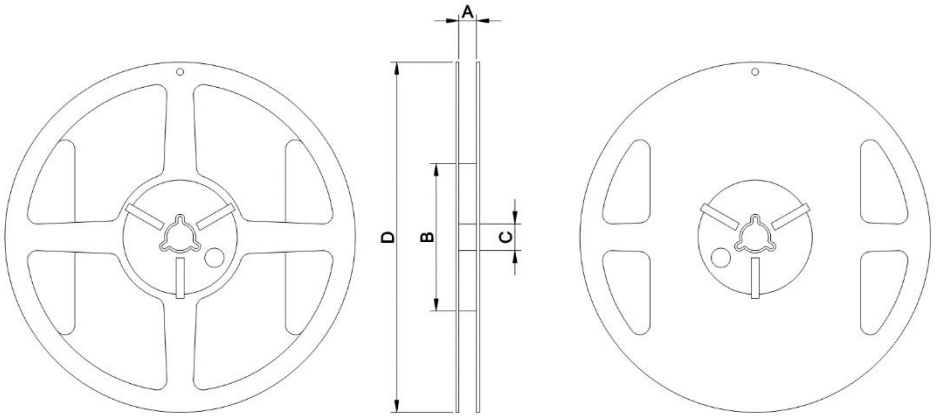

Tape Width(mm)	A(mm)	B(mm)	C(mm)	D(mm)	Chip/Reel(pcs)
8	9.0±0.5	60±2	13.5±0.5	178±2	3000

◆ **Storage Period**

Oxidizable Material, 12 months in vacuum sealed bag, please repack within 168 hours by re-seal the package treatment after using.

Storage Temperature Range : <30 degree C, Humidity : <60%RH

10. Dependability Test

Test item	Test condition / Test method	Specification
Solderability IEC 60068-2-58 GB/T2423.28	*Solder bath temperature：240±5℃ *Immersion time：2±0.5 sec Solder：Sn96.5Ag3.0Gu0.5 for lead-free.	At least 95% of a surface of each terminal electrode must be covered by fresh solder.
Leaching (Resistance to dissolution of metallization) JIS C5101	*Solder bath temperature：260±5℃ *Leaching immersion time：10±1 sec Solder : Sn96.5 Ag3.0 Gu0.5 for lead-free.	Loss of metallization on the edges of each electrode shall not exceed 25%.
Resistance to soldering heat IEC 60068-2-58 GB/T2423.28	*Preheating temperature：120~150℃, 1 minute. *Solder temperature：260±5℃ *Immersion time：10±1 sec Solder：Sn96.5Ag3.0Gu0.5 for lead-free Measurement to be made after keeping at room temperature for 24±2 hrs.	No mechanical damage. Electrical specification shall satisfy the descriptions in electrical characteristics at the room temperature. Loss of metallization on the edges of each electrode shall not exceed 25%.
Drop Test IEC 60068-2-32 GB/T2423.8 Customer's specification.	*Height：50 cm *Test Surface: Rigid surface of concrete or steel. *Times：6 surfaces for each units；2 times for each side.	No mechanical damage. Electrical specification shall satisfy the descriptions in electrical characteristics at the room temperature.
Vibration IEC 60068-2-6 GB/T 2423.10	*Frequency：10Hz~55Hz~10Hz(1min) *Total amplitude：1.5mm *Test times：6hrs.(Two hrs each in three mutually perpendicular directions)	No mechanical damage. Electrical specification shall satisfy the descriptions in electrical characteristics at the room temperature.

Adhesive Strength of Termination IEC60068-2-21 GB/T 2423.6	*Pressurizing force： 5N(≦0603)；10N(>0603) *Test time:10±1 sec	No remarkable damage or removal of the termination.
Bending test IEC 60068-2-21 GB/T 2423.29	The middle part of substrate shall be pressurized by means of the pressurizing rod at a rate of about 1 mm/s per second until the deflection becomes 2mm and then pressure shall be maintained for 10±1 sec. Measurement to be made after keeping at room temperature for 24±2 hours.	No mechanical damage. Electrical specification shall satisfy the descriptions in electrical characteristics at the room temperature.
Temperature cycle IEC60068-2-14 GB/T 2423.22	30 minutes at-40℃±2℃. 10~15 minutes at room temperature. 30minutes at +85℃±2℃. 10~15 minutes at room temperature. Total 100 continuous cycles Measurement to be made after keeping at room temperature for 24±2 hrs.	No mechanical damage. Electrical specification shall satisfy the descriptions in electrical characteristics at the room temperature.
High temperature IEC 60068-2-2 GB/T2423.2	*Temperature：85±2℃. *Test duration：500+24/-0 hours. Measurement to be made after keeping at room temperature for 24±2 hrs.	No mechanical damage. Electrical specification shall satisfy the descriptions in electrical characteristics.
Humidity (steady conditions) IEC60068-2-3 GB/T 2423.3	*Humidity：85±5%R.H. *Temperature：85±2℃. *Time：500+24/-0 hrs. Measurement to be made after keeping at room temperature for 24±2 hrs ※ 200hrs measuring the first data then 300hrs data.	No mechanical damage. Electrical specification shall satisfy the descriptions in electrical characteristics at the room temperature.
Low temperature IEC 60068-2-1 GB/T2423.1	*Temperature：-40±2℃. *Test duration：500+24/-0 hours Measurement to be made after keeping at room temperature for 24±2 hrs.	No mechanical damage. Electrical specification shall satisfy the descriptions in electrical characteristics at the room temperature.