MBS AGENT AIR
- Owner's Manual -

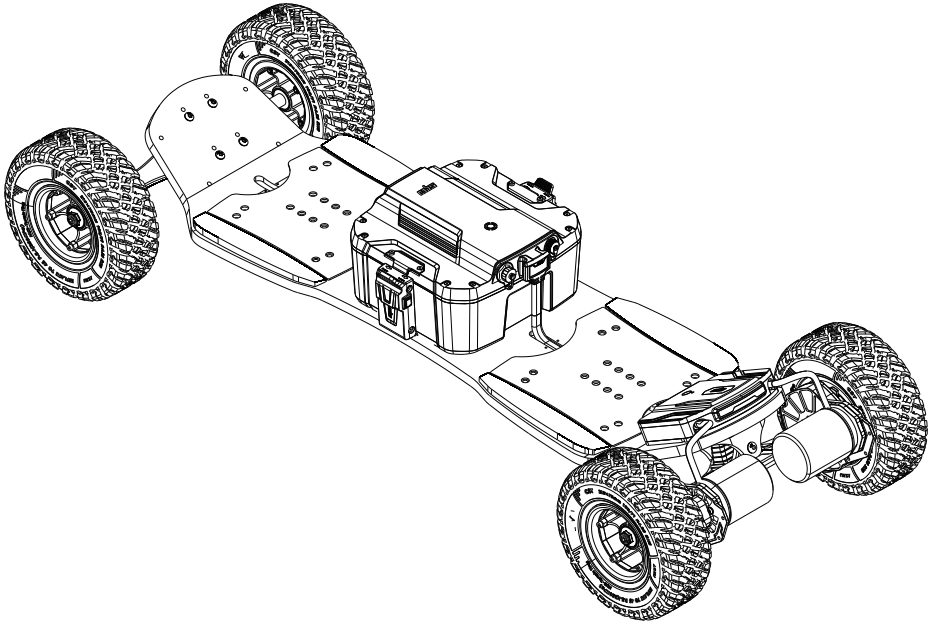

mbs
A·G·E·N·T

⚠ WARNING: High Risk of Injury or Death

- **Electric mountain boarding involves inherent risks and dangers that can result in serious injury or death.** To minimize these risks, it is essential to follow all safety instructions and precautions. Always use this product responsibly and in accordance with all applicable laws.
- Befor**e using the board, read all sections of this manual thoroughly.**
- **Always wear protective gear: Helm**et, knee and elbow pads, wrist guards, and appropriate footwear should be worn at all times while operating the board.
- Do not op**erate under the influence: Never us**e the board while under the influence of drugs, alcohol, or any substances that impair your judgment or coordination.
- Avoid wet or **slippery surfaces: Wet, icy, o**r loose terrain can severely impact control and braking ability, increasing the likelihood of accidents.
- Riding at high **speeds or on steep inclines increases the risk of loss of control. Only ride on te**rrain suitable for your experience level.
- Be aware of your **surroundings: Always ride in** areas free from traffic, pedestrians, and obstacles. Electric mountainboards are not designed for use on public roads or in traffic.
- Do not ride at nigh**t or in areas with poor visibility.**
- **Do not ride where you would not be safely in control of an unpowered board. In the event of a m**alfunction you may need to rely on alternative techniques such as foot-braking or power sliding to stop. Practice these techniques in advance.

⚠ WARNING: Product Safety

Risk of fire. No serviceable electrical parts. Do not open battery or ESC enclosures.
Battery and charging safety:

Use only the charger provided with the board. Improper chargers may cause overheating, fire, or explosion.

Do not charge or operate t**he board if it has been exposed to water or severe impact.**

Charge the board in a well-ventilated area away from flammable materials.

Leaving your battery in an uncharged state for more than 30 days will damage it. Batteries self-discharge over time. Even if not using your board, charge it every 30 days to prevent damage.

Routine maintenance: Before each time you ride inspect the condition of all components such as, but not limited to, deck, trucks, bindings, tires, battery, remote, motors, and ESC. Any signs of damage or wear should be addressed before use.

This device is not intended for use at elevations greater than 6560ft (2000m) above sea level. Lower density air at higher altitudes increases the risk of electrical short circuits and overheating.

CAUTION: Riding Safety Guidelines

A**s mentioned above, always wear protective gear. Never ride without a helmet!**

Beginners: Start with lower speeds (Gear 1) and practice in safe, open areas. Familiarize yourself with the remote control and the braking system before riding.

Exercise caution when advancing to higher **gears. Speed, power, and acceleration increase** significantly with each higher gear. Check the gear setting each time you ride.

This product is not intended for children un**der 16 years old. Riders should have sufficient physical abilit**y and coordination.

Obey local laws: Ensure you are riding in acco**rdance with local regulations. Electric mountainboard use may be restricted i**n certain areas.

In the event of a malfunction, immediately stop **using the board. Contact our support team at +1 719 884 1000 or c**ustomerservice@mbs.com for assistance.

This version of the manual may not be up to date, check www.mbs.com for updates.

ASSEMBLY

Tools Required for Assembly:

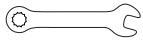

5/8" (16mm) Wrench

Board Parts:

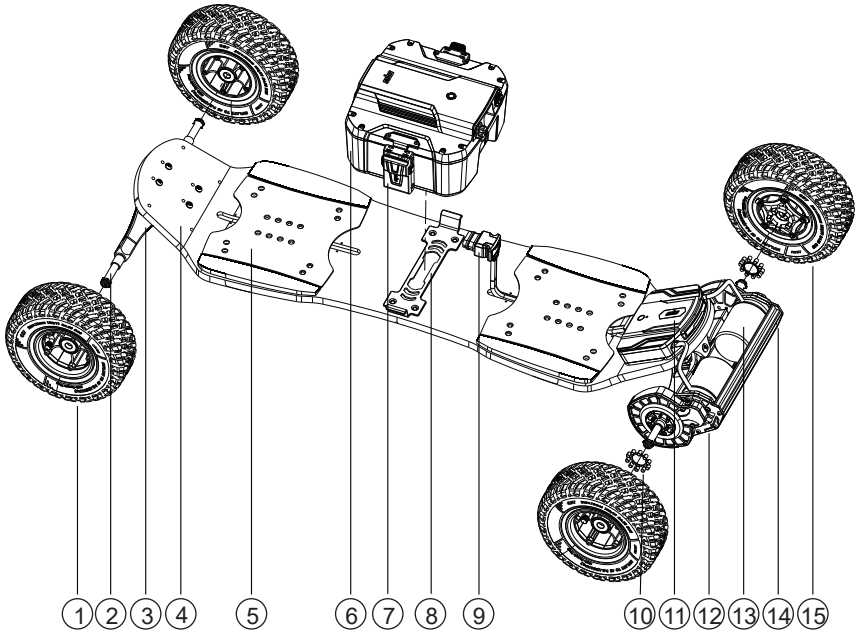

1. Front Wheel
2. Truck - Axle
3. Truck - Hanger
4. Deck
5. Grip Pad
6. Battery Box
7. Battery Box Buckle
8. Battery Mounting Plate
9. Battery Connector
10. PU Gear Cushion
11. ESC Assembly
12. Gear Drive Assembly
13. Motor
14. Motor Protection Plate
15. Rear Wheel (with coupler)

Want Help?
Watch us.

ASSEMBLY (Wheels)

Wheel Installation:

1. Assemble front wheels as shown.

- All valve stems must face outward.
- Insert allen key into bearing hole to help align bearing spacer when sliding wheel onto axle.
- Tighten axle nut fully. The bearing spacer will prevent over-tightening.

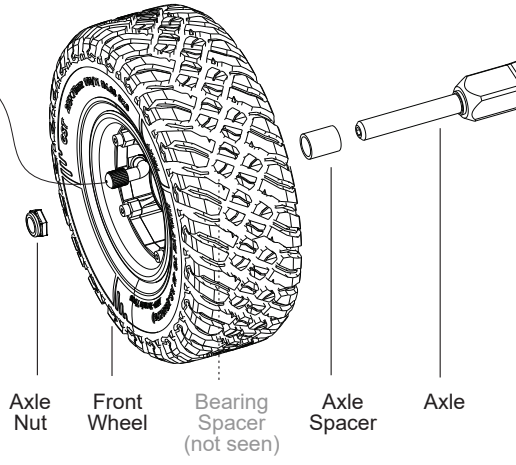

2. Assemble rear wheels (drive wheels) as shown.

- Follow instructions from above (front wheel assembly) with the addition of the following IMPORTANT step.
- IMPORTANT: Rear wheels require a "PU Gear Cushion" between wheel and gear drive assembly. Note: Depending on your model, this might already be inserted into gear drive unit.

Note: The rear axle spacer is built into the gear drive assembly.

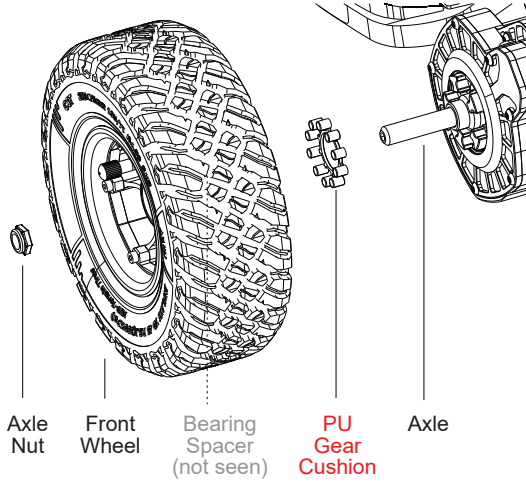

ASSEMBLY (Battery)

Battery Parts:

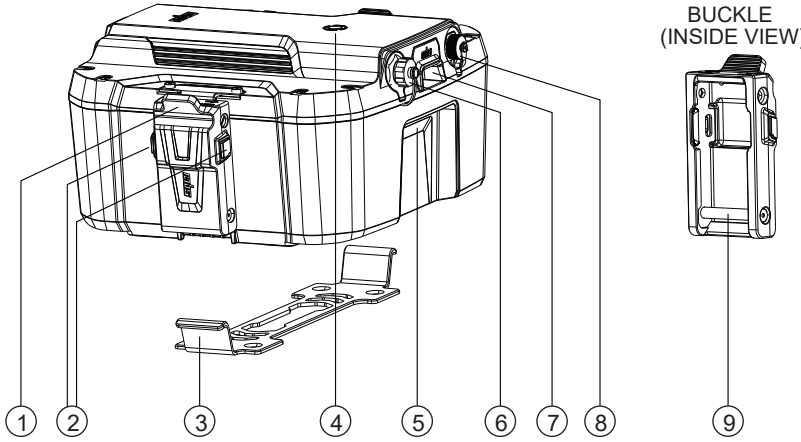

1. Buckle Lever
2. Buckle Release Buttons
3. Battery Mounting Plate Hook
4. Battery Level Test Button
5. Handle Area
6. USB-C Power Delivery (PD) Port *
7. Discharge Port Plug
8. Charge Port
9. Buckle Bar

* Not available on all models

Battery Installation:

1. Open both buckles. Place battery on board.

- To open buckle, squeeze Buckle Release Buttons and pull outward.
- Charge ports face rear end of board (where motors are).
- Check battery is well centered and mated with battery mounting plate. It should only move a little when you jiggle it back and forth.

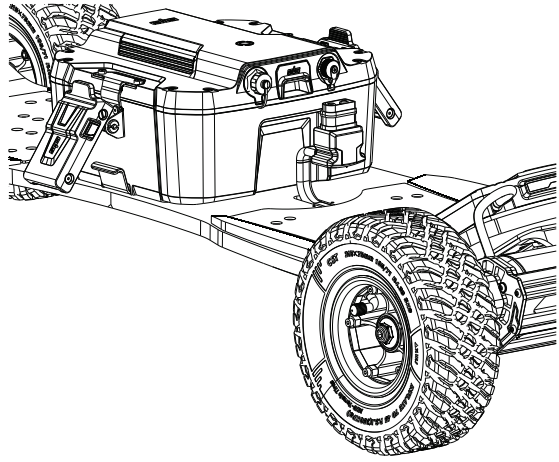

ASSEMBLY (Battery)

Battery Installation (continued):

2. Move bottom end of buckle into position.

- Buckle Bar should hook underneath battery mounting plate hook.

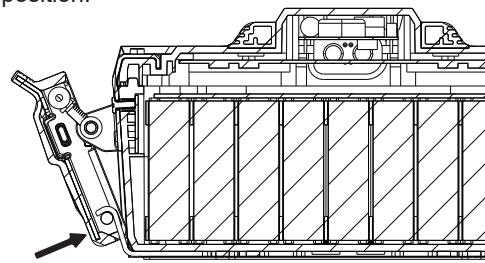

CROSS-SECTION

3. Push top end of buckle to close it.

- Push upward and inward on Buckle Lever.
- Push hard! The resistance from the locking mechanism will be significant.
- If you physically can't close the buckle it means you need to loosen it as shown in the following step.

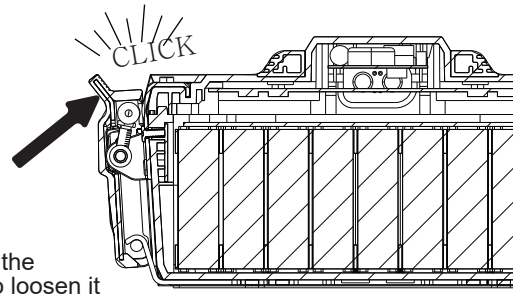

CROSS-SECTION

4. Rotate buckle to increase or decrease locking resistance (only if needed).

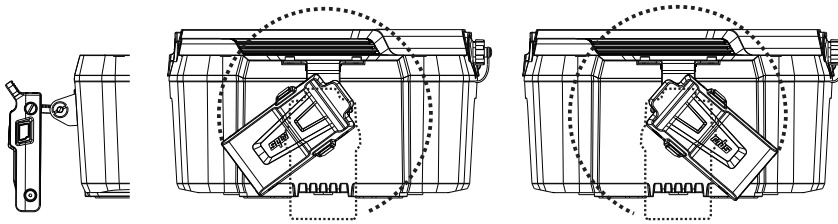

Rotation Position | Loosen: Rotate clockwise | Tighten: Rotate counter-clockwise

- Unlock and pull buckle outward from side of box in order to rotate.
- There is a sticker on top of the buckle to remind you which way is which.

5. Repeat steps 2-4 for the other buckle.

- With both buckles closed. test the fit. If the battery can jiggle back and forth tighten as needed (step 4).

ASSEMBLY (Battery)

Battery Installation (continued):

6. Remove Discharge Port Plug

- Store in a safe place such as your tool bag.
- You'll need to re-install it whenever you remove your battery from your board, for instance when swapping batteries.

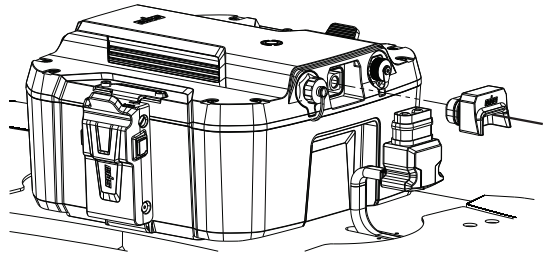

7. Connect Battery Connector to Battery.

- IMPORTANT! Push battery connector in ALL THE WAY.
- PUSH HARD to be sure. You will feel it stop when it hits the end of the hole.
- WARNING - Turning your board on with your battery connector only partially inserted will permanently damage both your connector and your battery as the full power of the system will attempt to pass through the anti-spark portion of the connector.

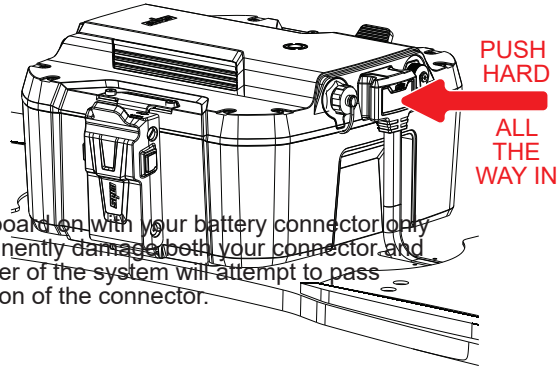

8. To remove you battery reverse the preceding installation steps.

- IMPORTANT! Always disconnect Battery Connector and reinstall Discharge Port Plug before unlocking buckles.
- Squeeze Buckle Release Buttons to unlock buckle.
- Pull down and outward on top end of buckle (Buckle Lever).

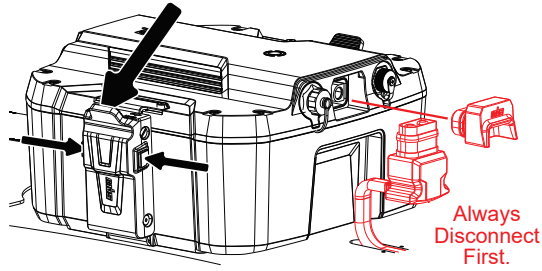

ASSEMBLY (Bindings)

Bindings / Heel Strap Installation:

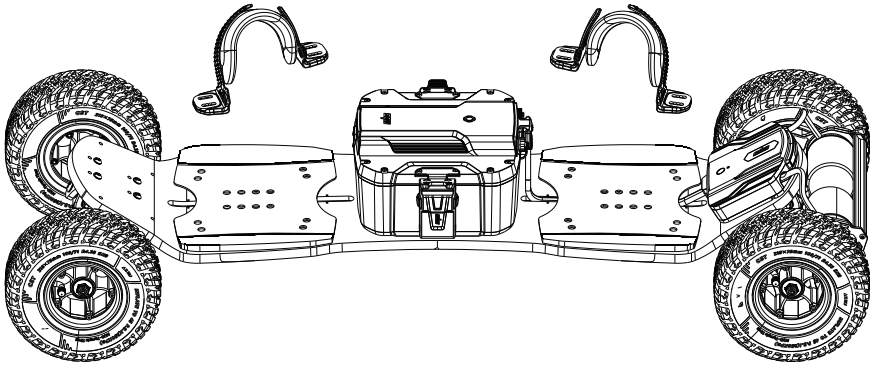

Bindings and heel straps expand what you can do on your MBS electric mountain board. Check out mbs.com for compatible bindings.
Follow Instructions in the manual included with your bindings or online via the QR code below.

mbs.com/manuals/040

Other MBS Accessory Installation:

Check out mbs.com to see all the other great accessories you can include with your board.

mbs.com

OPERATION (Charging)

Charge Board:

1. Always turn board off prior to charging.

2. Plug charger into wall.

3. Unscrew Charging Port Plug.

4. Plug charger into board. While charging, a solid blue light will illuminate on charger and charger fan will whir.

5. When fully charged, a solid green light will illuminate on charger and charger fan will stop whirring.

6. Unplug charger from battery, then from wall.

7. IMPORTANT. Don't forget to screw Charging Port Plug back in.

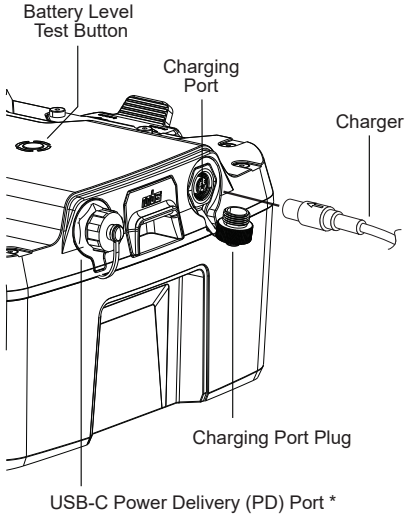

Charge Spare Batteries:

Same as previous section. The charging process is the same whether or not the battery is attached to the board.

Use the Battery Level Test button to check power level of spare batteries.

USB-C Power Delivery (PD) Port - available on select models

Use the USB-C Power Delivery (PD) port to charge devices (phones, tablets, laptops, cameras, drones,...) with common fast charge protocols (PD3.0, QC3.0, QC2.0, Apple, Samsung,..)

Note: The USB-C Port cannot be used to charge your battery. It can only be used to supply power to other devices (discharge only).

Charge Remote:

1. Open rubber dust cover on the base of the remote.

2. Charge with USB-C cable (5V-1A)

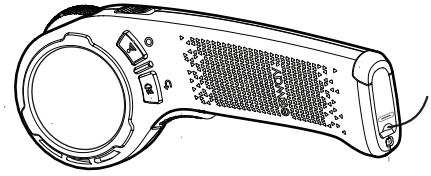

OPERATION (Quick Start)

Put on Your Protective Gear:

DON'T FORGET YOUR HELMET!

Turn Board On / Off:

First Time:
On - Short press the Power Button on the ESC Assembly.

Off - Long press the Power Button on the ESC Assembly.

Standby Mode:
Your board will automatically turn on / off when remote is turned on / off (next section).

* Standby settings can be adjusted in remote control settings menu (refer Remote Control Operation Instructions).

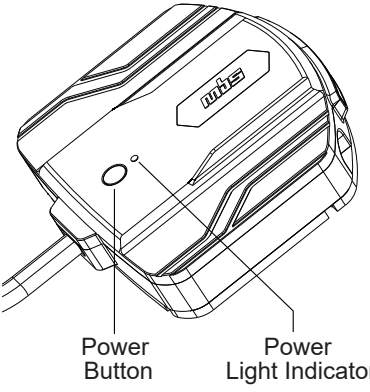

- Red: Board on but not connected to Remote (remote turned off or not paired with board).
- Green: Board and remote both on and paired.

Remote Quick Start:

1. To turn on/off long press Power Button (2 seconds)

Note: This will also turn your board on/off (Standby Mode). Adjust standby period from 1-7 days in remote settings menu (refer remote manual).

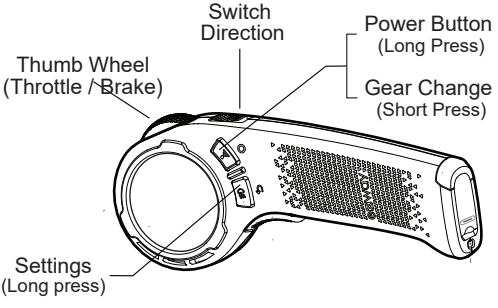

Accelerate / Brake
Spin forward to accelerate
Pull back to brake

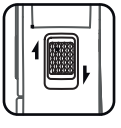

Switch Directions
Slide switch to change direciton of board when speed <3mph (<5km/h)

Switch Gears
Short press once to toggle through gears (details in next section)

OPERATION (Adjustment)

Remote Operating Instructions:

IMPORTANT: Read the full manual included with your Remote Control, or scan the QR code for a digital copy.

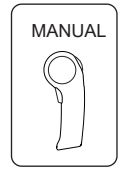

mbs.com/manuals/060

Gears / Modes:

GEAR 1 - BEGINNER	GEAR 3 - SPORT	TURBO - TURBO^
GEAR 2 - ECO*	GEAR 4 - RACE~	

Notes:
GEAR LIMIT: For the first 6 miles (10km) gears are limited to 1 and 2.
* MILEAGE: Estimates based on ECO mode. Higher gears decrease mileage.
~GEAR 4: Acceleration is intense! Mainly for pro riders in competitions.
^ TURBO: THROTTLE IS VERY SENSITIVE! EXERCISE EXTREME CAUTION!

Matrix III Truck Adjustment:

Matrix III Trucks are renowned for their adjustability, from very loose for carving to incredibly stiff for stability at high speeds. It is important to learn to adjust your trucks to your suit your needs. Stiff trucks will not turn easily, and loose trucks are unstable at high speeds.
The three levels of adjustment are summarized below.

Coarse - Change Shock Position. The biggest difference you can make.

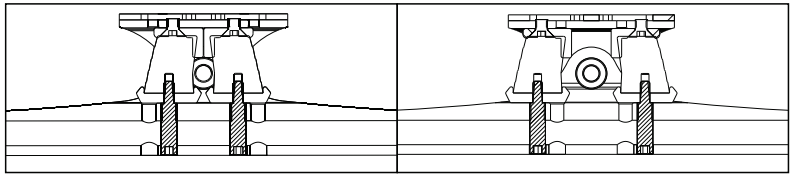

INSIDE
Best for:
- Riding without bindings -
- Low Speed / Sharp Turns -

OUTSIDE
Best for:
- Riding with bindings -
- High Speed / Wide Turns -

Medium - Change Shock Hardness. Higher is stiffer.

Fine - Compress ShockBlock by turning adjustment screw. Maximum 2 full turns. If you need more resistance change to harder ShockBlock.

Scan the QR for a link to the latest adjustment chart.

mbs.com/manuals/020

PRODUCT CARE / MAINTENANCE

AVOID WATER:

Although MBS strives to make our electric mountain boards water resistant, it is still possible for water to damage your board, not only electrical components, but also parts such as steel fasteners, axles, and laminates.
Avoid water as much as possible. If your board gets wet from riding or cleaning, dry it as best you can as soon as you can and place it somewhere it can fully dry before storing it. The less time spent wet the better.
Avoid salt water like the plague. It's the devil.

BATTERY STORAGE:

Store boards and batteries indoors in a cool, dry place away from UV radiation. Avoid storing near windows (heat and UV rays). Heat and humidity greatly reduce your battery's capacity. On average,
at 75F (24C) it takes 18 months to lose 10% capacity;
at 110F (43C) it takes only 3 months;
at 140F (60C) it takes just 1 month.

Short term storage -
When using your board regularly it's best to charge it after each ride so it's ready to go when you need it. Don't leave your battery for more than 7 days on low battery.

Long term storage -
NEVER STORE YOUR BATTERY FOR LONGER THAN 1 MONTH AT LOW BATTERY LEVEL. Doing so will damage your battery. Ideal battery level for long term storage is 50-75% full (neither high nor low).

Although 100% battery level isn't ideal for long term storage it is MUCH better than storing at low battery level (0-25%). Storing at low battery level will definitely damage your battery.

Turn power off before storing.

FIRMWARE UPDATES / FURTHER CUSTOMIZATION

MBS uses the Exskate Ride APP to provide OTA (Over The Air) firmware updates.

Scan the QR codes at right to download the APP.

You can also use the APP to further customize your board settings, such modifying stock gear settings.

Download on the App Store

Download for Android

The APP connects to your remote. If it can't find your remote during the "Add Device" process, click to "Unbind Phone" in the remote settings menu to clear any previous devices to which the remote might have connected.
SETTINGS > REMOTE > UNBINDING PHONE.

WARRANTY

MBS Consumer Warranty Policy:
MBS warrants complete boards against defects in workmanship and/or materials to the original retail purchaser for a period of twelve (12) months from the date the product was received. A copy of receipt from authorized MBS dealer must be submitted with any warranty claim.

Warranty is limited to manufacturer's defects in workmanship or materials. The warranty is void if the product is damaged due to any of the following:

Normal wear and tear including but not limited to wheels, bearings, bushings, and grip tape;
Accident or impact;
Abuse, misuse, negligence, or storing/using the Product in unsuitable environments (e.g., damp, sandy, corrosive,...).

Water damage;
Illegal use of the product;
Unauthorized disassembly, tampering, modifications, or repairs;
Failure to follow battery maintenance and storage guidelines;
Use in competition;
Commercial use.

EXCLUSIVITY:
WARRANTIES SET FORTH IN THIS PROVISION ARE EXCLUSIVE AND IN LIEU OF ALL WARRANTIES EXPRESSED OR IMPLIED, INCLUDING WARRANTIES ARISING FROM COURSE OF DEALING OR USING OR TRADE. MBS MAKES NO WARRANTY EXPRESSED OR IMPLIED, OF MERCHANTABILITY OR FITNESS FOR ANY PARTICULAR PURPOSE.

PROD**UCT SUBSTITUTIONS:**
MBS RESERVES THE RIGHT TO UPDATE MODEL DESIGNS, OR SUBSTITUTE MODELS WITH GRAPHIC AND/OR COLOR CHANGES. PRODUCT REPLACEMENTS ARE SUBJECT TO ITEM AVAILABILITY. IF AN EXACT REPLACEMENT IS NOT AVAILABLE, REPLACEMENT WILL BE MADE WITH A COMPARABLE ITEM OF EQUAL OR GREATER VALUE.

LIMITATI**ON OF LIABILITY:**
SELLER SHALL NOT BE LIABLE IN CONTRACT, IN TORT (INCLUDING NEGLIGENCE), OR OTHERWISE FOR DAMAGE OR LOSS OF OTHER PROPERTY, LOSS OF PROFITS OR REVENUE, LOSS OF USE OF PROPERTY OR EQUIPMENT, CLAIMS OF CUSTOMERS OF THE BUYER, OR FOR ANY SPECIAL, INDIRECT, INCIDENTAL, OR CONSEQUENTIAL DAMAGES WHATSOEVER. UNDER NO CIRCUMSTANCES SHALL SELLER'S LIABILITY EXCEED THE PURCHASE PRICE OF THE GOODS IN RESPECT OF WHICH DAMAGES ARE CLAIMED. THE OBLIGATION OF MBS AND BUYERS SOLE REMEDY UNDER ITS LIMITED WARRANTY IS THE SUPPLY OF A REPLACEMENT FROM REGULAR PRODUCT INVENTORY LINES. MBS SHALL NOT BE LIABLE FOR ANY OTHER COSTS INCURRED NOR SHALL MBS BE LIABLE FOR ANY SPECIAL, INDIRECT, INCIDENTAL OR CONSEQUENTIAL DAMAGES.

In North America - For more information, or to file a warranty claim, contact MBS directly.
mbs.com/warranty

Outside North America - Contact the dealer / distributor in your country.

V.24.04

mbs.com/manuals

Scan QR to check
for newer versions.

RIDE MORE

212 SUTTON LANE
COLORADO SPRINGS, CO 80907 USA

1.719.884.1000
customerservice@mbs.com
www.mbs.com

Tag us on Instagram for a chance to win MBS Merch.
@mbsmountainboard
@mountainboarders

We have worked hard to make sure your board meets or exceeds your expectations. If for any reason it doesn't, or if you have any suggestions for improvements please let us know.

FCC Statement

Changes or modifications not expressly approved by the party responsible for compliance could void the user's authority to operate the equipment.

This equipment has been tested and found to comply with the limits for a Class B digital device, pursuant to Part 15 of the FCC Rules. These limits are designed to provide reasonable protection against harmful interference in a residential installation. This equipment generates uses and can radiate radio frequency energy and, if not installed and used in accordance with the instructions, may cause harmful interference to radio communications. However, there is no guarantee that interference will not occur in a particular installation. If this equipment does cause harmful interference to radio or television reception, which can be determined by turning the equipment off and on, the user is encouraged to try to correct the interference by one or more of the following measures:

-- Reorient or relocate the receiving antenna.

-- Increase the separation between the equipment and receiver.

-- Connect the equipment into an outlet on a circuit different from that to which the receiver is connected.

-- Consult the dealer or an experienced radio/TV technician for help

This device complies with part 15 of the FCC rules. Operation is subject to the following two conditions (1)this device may not cause harmful interference, and (2) this device must accept any interference received, including interference that may cause undesired operation.

This equipment complies with FCC radiation exposure limits set forth for an uncontrolled environment. This equipment should be installed and operated with minimum distance 20cm between the radiator & your body.