RHX8-Q1C Control Card pecification

LED display control card>WiFi control card

Specification version：20250210

Catalogue

1、 Overview of Control Cards

1.1 Control card functional characteristics ----------3

1.2 Application Fields ---------- 3

2、 Control card RHX8-Q1C module interface

2.1 Size Packaging ---------- 4

2.2 Composition diagram of internal structural components of control card ----------5

2.3 Control Card 75 Signal Interface Pin Definition ---------- 6

3、 Control card RHX8-Q1C parameters

3.1 Operating power consumption of control card ----------7

3.2 Control card RHX8-Q1C RF parameters ---------- 8

4、 Control card RHX8-Q1C antenna information

4.1 Control card antenna type ---------- 8

4.2 How to reduce antenna interference ---------- 9

5、 Packaging and production guidance for control card RHX8-Q1C

5.1 External dimensions ---------- 9

5.2 PCB schematic ---------- 10

5.3 Storage and transportation conditions for control card RHX8-Q1C ----------10

1、 Overview of Control Card

RHX8-Q1C is a low-power WiFi module developed by Pudis Technology for connecting LED displays and transmitting text information. The control card CPU contains wireless RF function and program running function, with built-in WiFi network protocol stack and program running parameter functions. Clock running chip DS1302 and output chip 74HC245. The number of load points that can be carried is: 384 * 16 points in low grayscale, 768 * 16 points in seven colors, and one onboard interface of 75.

1.1 Control card functional characteristics

1. Built in low-power MCU: LN882HK， Main frequency 2.4GHz
2. Working voltage: 3V-3.6V
3. Output interface: Display screen 75 interface
4. Display type: LED full-color strip screen
• 802.11 B/G/N20
• Channels 1-14@2.4GHz
• Supports WPA/WPA2 security mode
Output power of+20dBm in 802.11b mode
• Onboard PCB antenna
• Environmental temperature:- 20℃ to 45℃

1.2 application area

1、LED display screen outputs text information
2、The operation diagram for connecting the control card to the display is shown below:

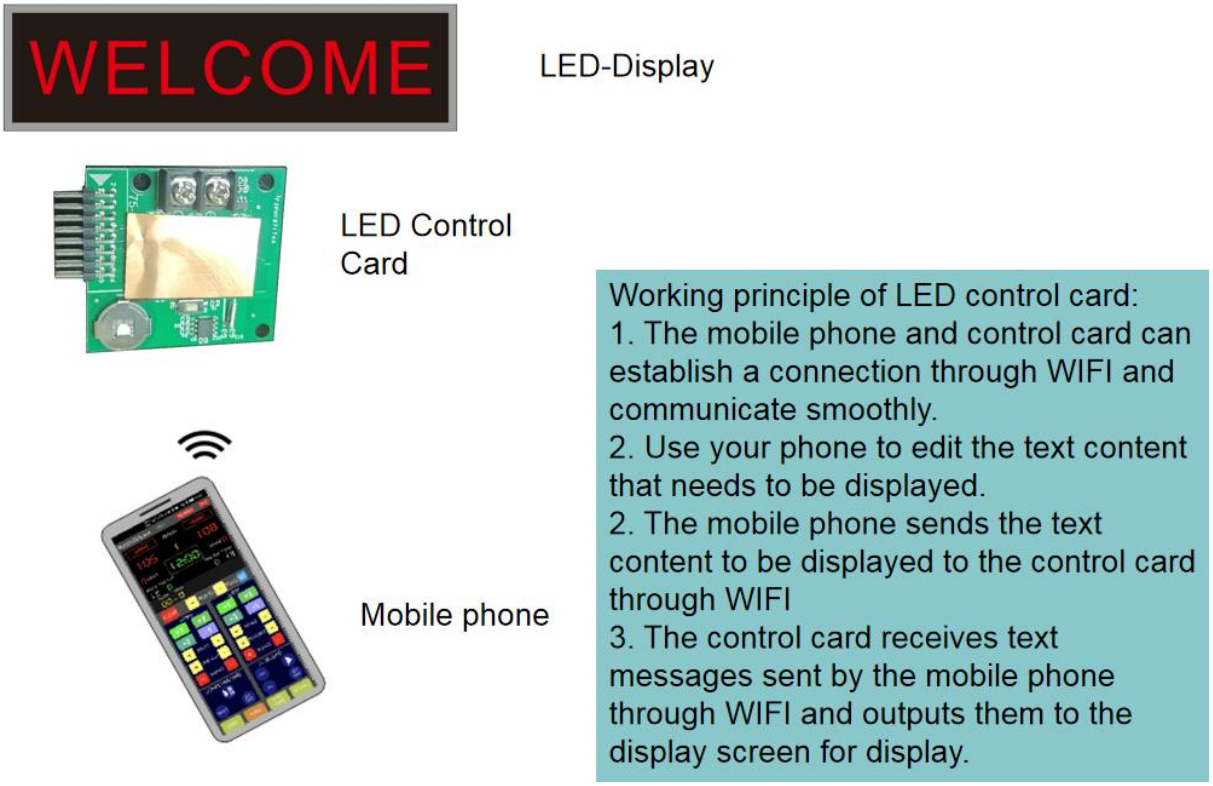

2、 Control card RHX8-Q1C module interface

2.1 Size Packaging

The control card RHX8-Q1C has one Pin16 display screen with 75 interfaces, consisting of one set of XH2.54mm spaced double row pins and one set of KF7.62 5V power interface. The power interface is tightened with screws and the pin spacing is 7.62mm. The external dimensions of the control card RHX8-Q1C are:

The size diagram of control card RHX8-Q1C is shown below：

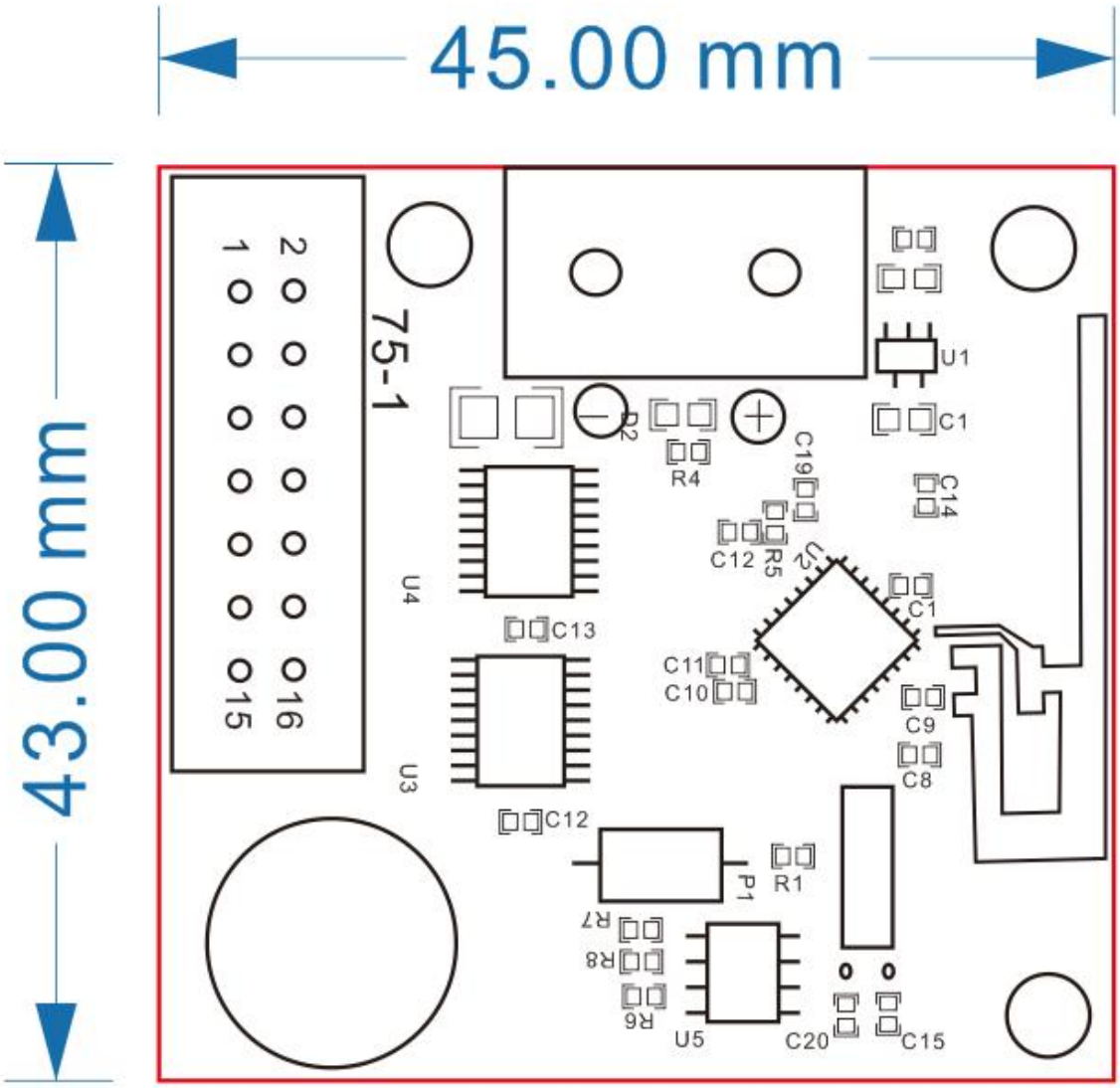

2.2 Composition diagram of internal structural components of control card：

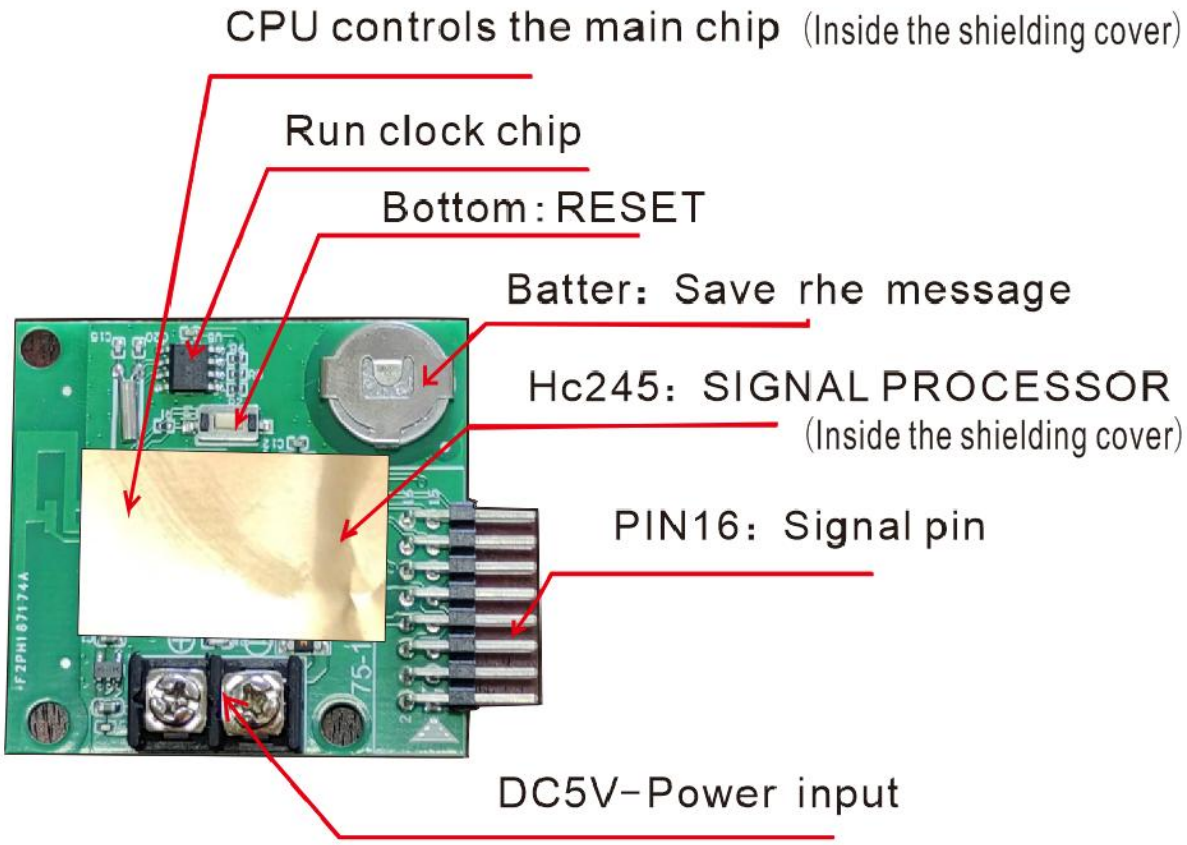

2.3 Definition of 75 signal interface pins for control card:

sign	functional definition
R1	First row of data-R
G1	First row of data-G
B1	TFirst row of data-B
GND	Power Ground
R2	Second line of data-R
G2	Second line of data-G
B2	Second line of data-B
GND	Power Ground
A	Horizontal decoding-A
B	Horizontal decoding-B
C	Horizontal decoding-C
D	Horizontal decoding-D
CLK	clock signal
LAT	Blanking Signal
EN	ENABLE
GND	Power Ground

3、Control card RHX8-Q1C parameters:

parameter	describe	Maximum value	Maximum value	unit
Ts	storage temperature	-40	45	℃
Ta	operation temperature	-20	75	℃
VDD	working voltage	3.0	3.6	V
VIL	IO low level input	0	0.8	V
VIH	IO high-level input	2.0	-3.3	V

VOL	IO low level input	0	0.4	V
VOH	IO high-level input	2.5	3.3	V
Imax	IO drive current	12	16	mA

3.1 Control card operating power consumption

Working mode	Work status, TA=25℃, DC=5V	average value	Peak value (typical value)	unit
Link distribution network status	The module is in a fast connect distribution network state, WIFI indicator light flashes rapidly	55	108	mA
Network idle state	The module is in a networked working state, The WiFi indicator light is constantly on	54	106	mA
Network working status	The module is in a networked working state, The WiFi indicator light is constantly on	56	102	mA
Offline state due to network disconnection	The module is in a disconnected working state, The WiFi indicator light is constantly off	56	105	mA

3.2 Control card RHX8-Q1C RF parameters

Parameter project	detailed description
Frequency range	2.400~2.4835GHz
Wi-Fi standard	IEEE 802.11b/g/n(thoroughfare 1-14)
Transfer rate	11b:1,2,5.5, 11 (Mbps)
Antenna type	PCB Antenna, gain 2.03dBi

4、 Control card RHX8-Q1C antenna information

4.1 Control card antenna type

The control card antenna is a PCB board mounted antenna access method with an antenna gain of 2.03dBi.

As shown in the following diagram：

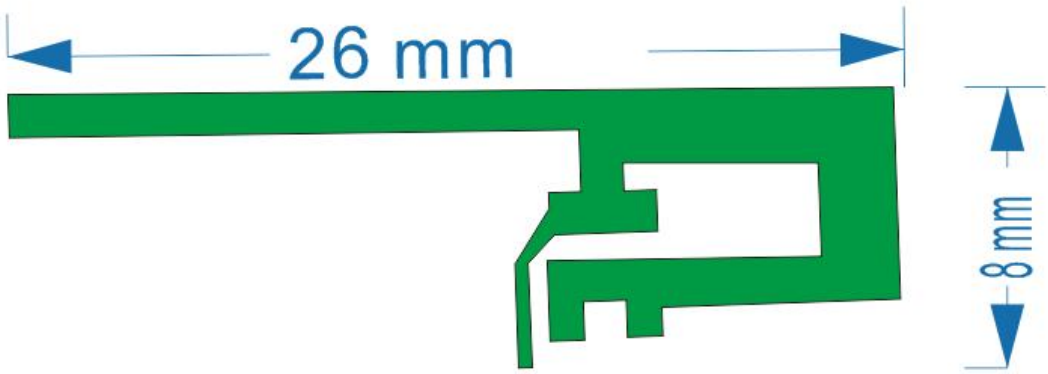

4.2 How to reduce antenna interference

When using PCB mounted antennas on Wi Fi modules, to ensure optimal Wi Fi performance, it is recommended that the distance between the module antenna and other metal components be at least 15mm.

5、 Packaging and production guidance for control card RHX8-Q1C：

5.1 External dimensions:

Control card RHX8-Q1C external dimensions: 43 ± 0.25 mm (W) × 45 ± 0.25 mm (L) × 7 ± 0.15 mm (H).

As shown in the following figure.

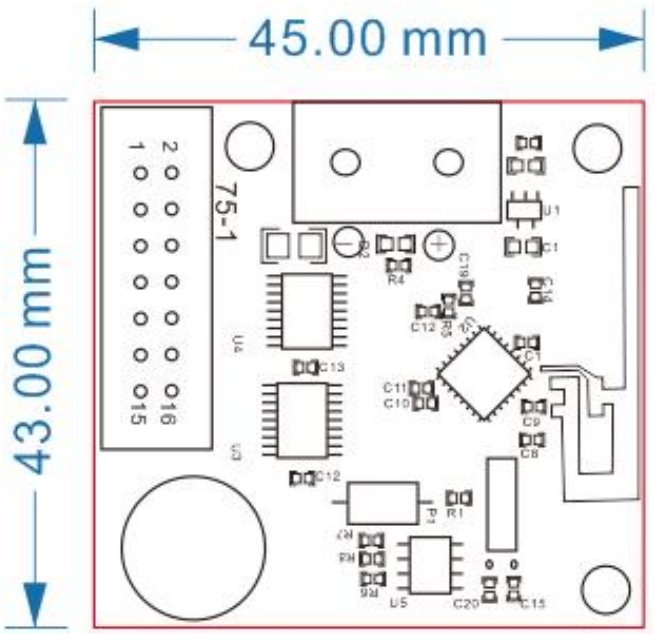

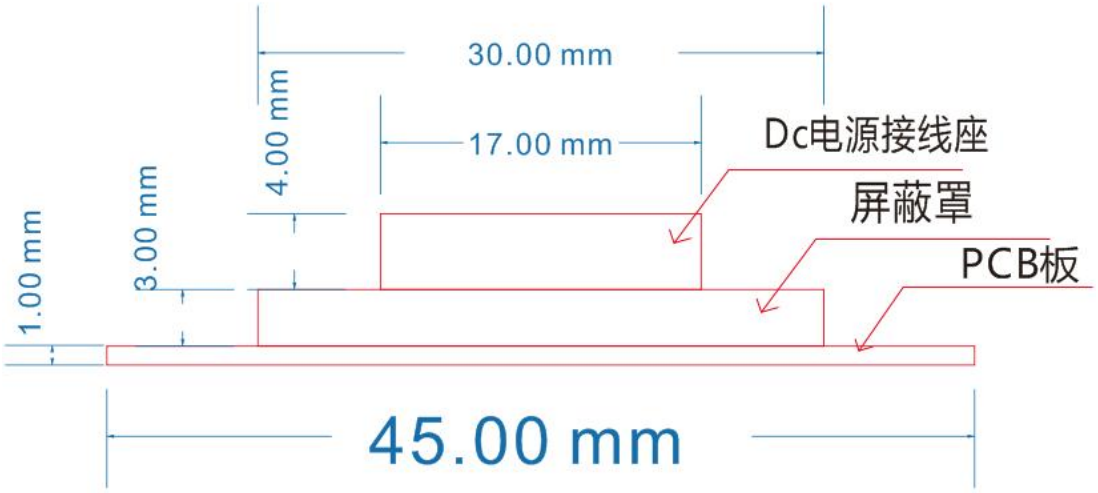

5.2 PCB schematic diagram

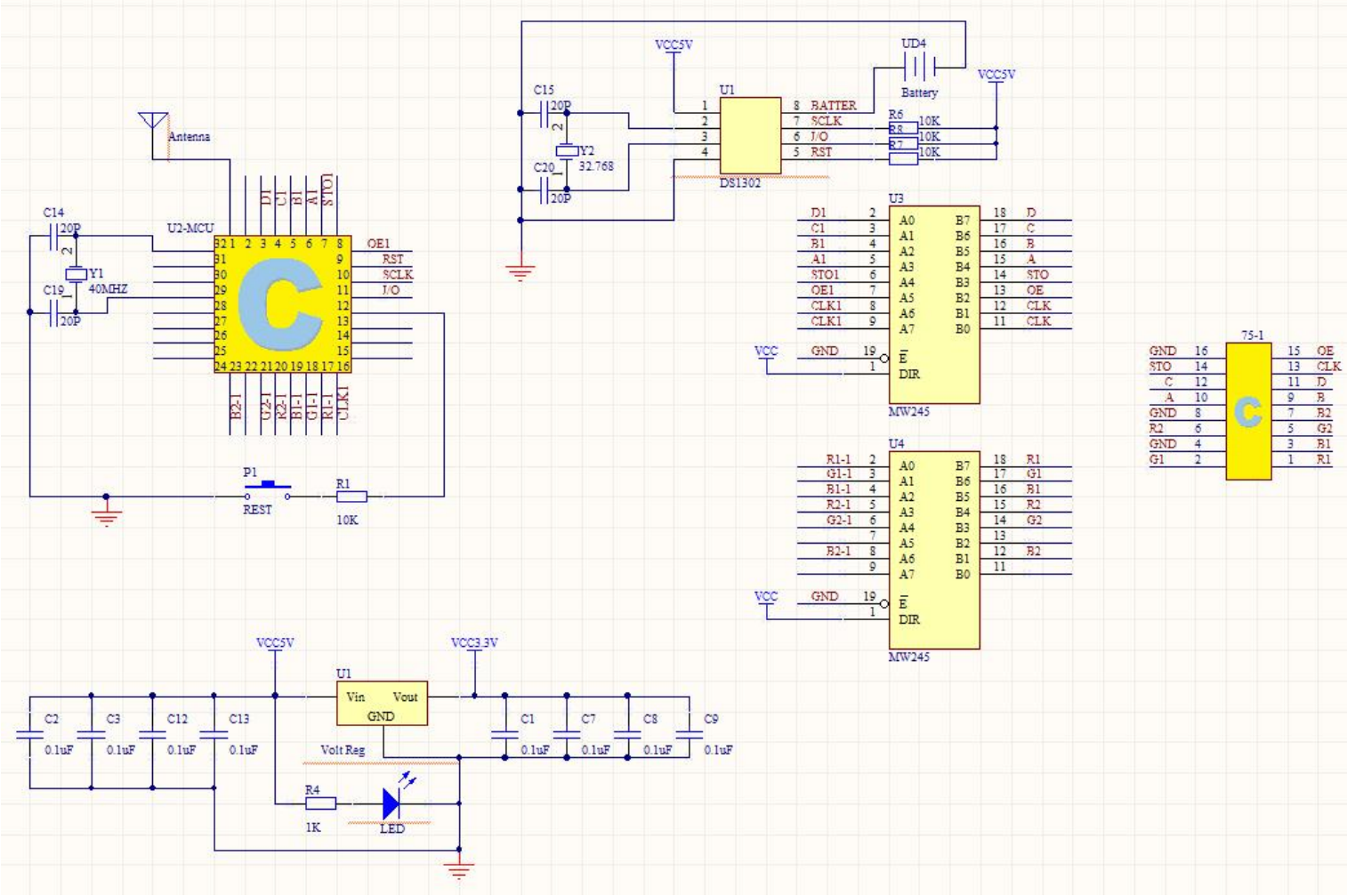

5.3 Storage and transportation conditions for control card RHX8-Q1C:

1、Each control card is sealed in a moisture-proof bag and stored in an environment with a temperature<45 ℃ and humidity<70% RH.

2、Transportation of control cards: 5-layer corrugated paper packaging, separated by pearl cotton between layers, and cardboard boxes to prevent heavy objects from pressing against each other.

Integration instructions for host product manufacturers according to KDB 996369 D03 OEM Manual vO1

1.2 List of applicable FCC rules
FCC Part 15 Subpart C 15.247& 15.209

1.3 Specific operational use conditions
The module is a WiFi module
Operation Frequency: 2412-2462MHz
Number of Channel: 1 1
Modulation:IEEE 802.11b: DSSS (CCK, QPSK, BPSK)
IEEE 802.11g: OFDM (64QAM, 16QAM, QPSK, BPSK)
IEEE 802.11n HT20,: OFDM (64QAM, 16QAM, QPSK, BPSK)
Type:PCBAntenna Gain:2.03dBiMax.

This module is stand-alone modular. If the end product will involve the Multiple simultaneously transmitting condition or different operational conditions for a stand-alone modular transmitter in a host, host manufacturer have to consult with module manufacturer for the installation method in end system.

1.4 Limited module procedures
Not applicable

1.5 Trace antenna designs
Not applicable. The module has its own antenna, and doesn't need a host's printed board microstrip trace antenna etc.

1.6 RF exposure considerations
This equipment complies with FCC radiation exposure limits set forth for an uncontrolled environment. This equipment should be installed and operated with minimum distance 20cm between the radiator and your body

and if RF exposure statement or module layout is changed, then the host product manufacturer required to take responsibility of the module through a change in FCC ID or new application. The FCC ID of the module cannot be used on the final product. In these circumstances, the host manufacturer will be responsible for re-evaluating the end product (including the transmitter) and obtaining a separate FCC authorization.

1.7 Antennas
Antenna Specification are as follows:

Type: PCB Antenna
Gain:2.03dBi

This device is intended only for host manufacturers under the following conditions:

The transmitter module may not be co-located with any other transmitter or antenna;

The module shall be only used with the internal antenna(s) that has been originally tested and certified with this module. The antenna must be either permanently attached or employa 'unique[1] antenna coupler.

As long as the conditions above are met, further transmitter test will not be required. However, the host manufacturer is still responsible for testing their end-product for any additional compliance requirements required with this module installed (for example, digital device emissions, PC peripheral requirements, etc.).

2.8 Label and compliance information
Host product manufacturers need to provide a physical or e-label stating "Contains FCC ID: 2BMW2-RHX8-Q1C”with their finished product.

2.9 Information on test modes and additional testing requirements

Operation Frequency: 2412-2462MHz
Number of Channel: 1 1
Modulation:IEEE 802.11b: DSSS (CCK, QPSK, BPSK)
IEEE 802.11g: OFDM (64QAM, 16QAM, QPSK, BPSK)
IEEE 802.11n HT20,: OFDM (64QAM, 16QAM, QPSK, BPSK)
Host manufacturer must perfom test of radiated & conducted emission and spurious emission, etc according to the actual test modes for a stand-alone modular transmitter in a host, as well as for multiple simultaneously transmitting modules or other transmitters in a host product.
Only when all the test results of test modes comply with FCC requirements, then the end product can be sold legally.

2.10 Additional testing, Part 15 Subpart B disclaimer

The modular transmitter is only FCC authorized for FCC Part 15 Subpart C 15.247& 15.209 and that the host product manufacturer is responsible for compliance to any other FCC rules that apply to the host not covered by the modular transmitter grant of certification. If the grantee markets their product as being Part 15 Subpart B compliant (when it also contains unintentional-radiator digital circuity), then the grantee shall provide a notice stating that the final host product still requires Part 15 Subpart B compliance testing with the modular transmitter installed.

Federal Communication Commission Statement (FCC, U.S.)

This equipment has been tested and found to comply with the limits for a Class B digital device, pursuant to Part 15 of the FCC Rules. These limits are designed to provide reasonable protection against harmful interference in a residential installation. This equipment generates, uses and can radiate radio frequency energy and, if not installed and used in accordance with the instructions, may cause harmful interference to radio communications. However, there is no guarantee that interference will not occur in a particular installation. If this equipment does cause harmful interference to radio or television reception, which can be determined by turning the equipment off and on, the user is encouraged to try to correct the interference by one of the following measures: -Reorient or relocate the receiving antenna.
-Increase the separation between the equipment and receiver.
-Connect the equipment into an outlet on a circuit different from that to which the receiver is connected.
-Consult the dealer or an experienced radio/TV technician for help.

This device complies with Part 15 of the FCC Rules. Operation is subject to the following two conditions: (1)This device may not cause harmful interference, and (2) this device must accept any interference received, including interference that may cause undesired operation.

FCC Caution:
Any changes or modifications not expressly approved by the party responsible for compliance could void the user's authority to operate this equipment.

IMPORTANT NOTES

Co-location warning:
This transmitter must not be co-located or operating in conjunction with any other antenna or transmitter.

OEM integration instructions:
This device is intended only for OEM integrators under the following conditions:

The transmitter module may not be co-located with any other transmitter or antenna. The module shall be only used with the external antenna(s) that has been originally tested and certified with this module.

As long as the conditions above are met, further transmitter test will not be required. However, the OEM integrator is still responsible for testing their end-product for any additional compliance requirements required with this module installed (for example, digital device emissions, PC peripheral requirements, etc.).

Validity of using the module certification:
In the event that these conditions cannot be met (for example certain laptop configurations or co-location with another transmitter), then the FCC authorization for this module in combination with the host equipment is no longer considered valid and the FCC ID of the module cannot be used on the final product In these circumstances, the OEM integrator will be responsible for re-evaluating the end product (including the transmitter) and obtaining a separate FCC authorization.

End product labeling:

The final end product must be labeled in a visible area with the following: "Contains Transmitter Module FCC

ID: 2BMW2-RHX8-Q1C.

Information that must be placed in the end user manual:
The OEM integrator has to be aware not to provide information to the end user regarding how to install or remove this RF module in the user's manual of the end product which integrates this module. The end user manual shall include all required regulatory information/warning as show in this manual.

3. When this Module is installed into the Special host,defined in page 19 appendix 1a Class II Pemissive Change Test Plan will act as following:
The hostshall still apply C2PC change:

The hostshall not change the module's hardware and software parameters.Modulation modes shall keep consistent with the certified modular.
The hostshall still meet the rule section FCC Part 15 Subpart C 15.247 & 15.209
The host's fundamental maximum output powershall be confirmed under the worst case from module.
Host's AC Conducted emissions andradiated spurious emissions including radiate band edges shall be test to be confim no parasitic emissions ie.,compliance emissions due to ingress.Band edge compliance test shall also tobe verified underthe worst case from module.Host cannot change the RF Exposure use conditions.If use conditions is changed, the separate Approval shall be required.

Moudleintegrated in other host need new FCC ID application.

4. ATTENTION

1)This device and itsantenna(s)must not be co-located with any othertransmitters except in accordance with FCC multi-transmitter product procedures.Refering to the multi-transmitterpolicy,multipletransmitter(s)and module(s)can be operated simultaneously without C2PC.
2)For all products market in US,OEM has to limit the Operating Frequency.
2.400~2.4835GHz by supplied fimware programming tool.OEM shall not supply any tool or i nfo to the end-user regarding to Regulatory Domain change.

5. USERS MANUAL OF THE END PRODUCT:

The device has been evaluated to meet general RF exposure requirement.
The devicecan The end user has to be informed
that the FCC radio -frequency exposure guidelines for an uncontrolled environment can be satisfied.The end user has to also be informed that any changes or modifications not expressly approved by the manufacturer could void the user's authority to operate this equipment.