FCC TEST REPORT
FCC ID:2BMWX-MTN

Product	:	**mini pc**
Model Name	:	**MTN N100, MTN N305, MTN 5800H, MTN 1240P, MTN 3020e, MTN 7735HS, MTN 11320H, MTN 1135G7, MTN 8845HS, MTN 6900HX, MTN 6600H, MTN 12450H, MTN 13620H, MTN 8745HS, mini pc, MTN *********(*represents any character from 0 to 9, A to Z)**
Brand	:	**Maxtang**
Report No.	:	**NCT24051468E1-4**

Prepared for

Shenzhen Maxtang Computer Company Limited
6th Floor, Bldg.3, HonghuiIndustial Park,
Liuxian 2nd Road, Bao'an District, Shenzhen City, Guangdong Province China

Prepared by

Shenzhen NCT Testing Technology Co., Ltd.
A101&2F B2, Fuqiao 6th Area, Xintian Community, Fuhai Street, Baoan District, Shenzhen, People's Republic of China
TEL: 400-8868-419
FAX: 86-755-27790922

1 TEST RESULT CERTIFICATION

Manufacture's name	:	Shenzhen Maxtang Computer Company Limited
Address	:	6th Floor, Bldg.3, HonghuiIndustial Park, Liuxian 2nd Road, Bao'an District, Shenzhen City, Guangdong Province China
Product name	:	mini pc
Model name	:	MTN N100, MTN N305, MTN 5800H, MTN 1240P, MTN 3020e, MTN 7735HS, MTN 11320H, MTN 1135G7, MTN 8845HS, MTN 6900HX, MTN 6600H, MTN 12450H, MTN 13620H, MTN 8745HS, mini pc, MTN *********(*represents any character from 0 to 9, A to Z)
Model difference		Only Model name is different, Select the model: MTN N100 for all testing
Standards	:	FCC CFR Title 47 Part 15 Subpart E Section 15.407 ANSI C63.10:2020 KDB 789033 D02 v02r01 KDB 905462 D02 UNII DFS Compliance Procedures New Rules v02 KDB 905462 D03 Client Without DFS New Rules v01r02
Test procedure	:	ANSI C63.10:2020
Date of test	:	Dec. 06, 2024 to Dec. 20, 2024
Date of Issue	:	Dec. 20, 2024

This device described above has been tested by NCT, and the test results show that the equipment under test (EUT) is in compliance with the FCC requirements. And it is applicable only to the tested sample identified in the report.

This report shall not be reproduced except in full, without the written approval of NCT, this document may be altered or revised by NCT, personal only, and shall be noted in the revision of the document.

Test Engineer:

Keven Wu / Engineer

Technical Manager:

Henry Wang / Manager

TABLE OF CONTENT

Test Report Declaration Page
1. VERSION 4
2. TEST SUMMARY 5
3. MEASUREMENT UNCERTAINTY 6
4. PRODUCT INFORMATION AND TEST SETUP 7
4.1 Product Information 7
4.2 Test Setup Configuration 8
4.3 Support Equipment 8
4.4 Channel List 9
4.5 Test Mode 9
4.6 Test Environment 10
5. TEST FACILITY AND TEST INSTRUMENT USED 11
5.1 Test Facility 11
5.2 Test Instrument Used 11
6. TECHNICAL REQUIREMENTS FOR DFS 13
6.1 Applicability of DFS Requirements 13
6.2 DFS Detection Thresholds and Response Requirement 13
6.3 Radar Test Waveforms 14
7. DFS DETECTION THRESHOLD LEVELS 21
8. CONDUCTED TEST PROCEDURE 22
9. EUT TEST SETUP PHOTOGRAPHS 21

(Note: N/A means not applicable)

1. VERSION

Report No.	Issue Date	Description	Approved
ZKT-24051468E1-4	Dec. 20, 2024	Original	Valid

Shenzhen NCT Testing Technology Co., Ltd.
2008

2. TEST SUMMARY

The Product has been tested according to the following specifications:

Test Item	Test Requirement	Test method	Result
DFS Detection Threshold	47 CFR Part 15 Subpart E Section 15.407 (h)(2)	KDB 905462 D02	N/A
Channel Availability Check Time	47 CFR Part 15 Subpart E Section 15.407 (h)(2)(ii)	KDB 905462 D02	N/A
U-NII Detection Bandwidth	47 CFR Part 15 Subpart E Section 15.407 (h)(2)	KDB 905462 D02	N/A
Channel Closing Transmission Time	47 CFR Part 15 Subpart E Section 15.407 (h)(2)(iii)	KDB 905462 D02	PASS
Channel Move Time	47 CFR Part 15 Subpart E Section 15.407 (h)(2)(iii)	KDB 905462 D02	PASS
Non-Occupancy Period	47 CFR Part 15 Subpart E Section 15.407 (h)(2)(iv)	KDB 905462 D02	PASS

Remark:
The tested sample and the sample information are provided by the client.
Tx: In this whole report Tx (or tx) means Transmitter.
Rx: In this whole report Rx (or rx) means Receiver.
RF: In this whole report RF means Radiated Frequency.
CH: In this whole report CH means channel.
Volt: In this whole report Volt means Voltage.
Temp: In this whole report Temp means Temperature.
Humid: In this whole report Humid means humidity.
Press: In this whole report Press means Pressure.
N/A: In this whole report not application.

3. MEASUREMENT UNCERTAINTY

Where relevant, the following measurement uncertainty levels have been estimated for tests performed on the Product as specified in CISPR 16-4-2. This uncertainty represents an expanded uncertainty expressed at approximately the 95% confidence level using a coverage factor of k=2.

Parameter	Uncertainty
RF output power, conducted	±1.0dB
Power Spectral Density, conducted	±2.2dB
Radio Frequency	± 1 x 10-6
Bandwidth	± 1.5 x 10-6
Time	±2%
Duty Cycle	±2%
Temperature	±1°C
Humidity	±5%
DC and low frequency voltages	±3%
Conducted Emissions (150kHz~30MHz)	±3.64dB
Radiated Emission(9KHz~30MHz)	±4.51dB
Radiated Emission(30MHz~1GHz)	±5.03dB
Radiated Emission(1GHz~25GHz)	±4.74dB
Radiated Emission(25GHz~40GHz)	±3.38dB

Shenzhen NCT Testing Technology Co., Ltd. 2008

4. PRODUCT INFORMATION AND TEST SETUP

4.1 Product Information

Model(s):	MTN N100, MTN N305, MTN 5800H, MTN 1240P, MTN 3020e, MTN 7735HS, MTN 11320H, MTN 1135G7, MTN 8845HS, MTN 6900HX, MTN 6600H, MTN 12450H, MTN 13620H, MTN 8745HS, mini pc, MTN *********(*represents any character from 0 to 9, A to Z)
Model Description:	Only Model name is different, Select the model: MTN N100 for all testing
Wi-Fi Specification:	IEEE 802.11a/b/g/n/ac
Hardware Version:	N/A
Software Version:	N/A
Operation Frequency:	IEEE 802.11a/n/ac(20M): 5150MHz ~5250MHz/ 4 channel IEEE 802.11n/ac(40M): 5150MHz ~5250MHz/ 2 channel IEEE 802.11ac(80M): 5150MHz ~5250MHz/ 1 channel IEEE 802.11a/n/ac(20M): 5250MHz ~5350 MHz/ 4 channel IEEE802.11n/ac(40M): 5250MHz ~5350 MHz/ 2 channel IEEE802.11ac(80M): 5250MHz ~5350 MHz/ 1 channel IEEE 802.11a/n/ac(20M): 5470MHz ~5725 MHz/ 11 channel IEEE802.11n/ac(40M): 5470MHz ~5725 MHz/ 5 channel IEEE802.11ac(80M): 5470MHz ~5725 MHz/ 3 channel IEEE 802.11a/n/ac(20M): 5725MHz ~5850MHz/ 5 channel IEEE 802.11n/ac(40M): 5725MHz ~5850MHz/ 2 channel IEEE 802.11ac(80M): 5725MHz ~5850MHz/ 1 channel
Max. RF output power:	WiFi (5G): 15.23dBm
Type of Modulation:	WiFi (5G):, OFDM, DSSS, OFDM, CCK
Antenna installation:	Internal Antenna
Antenna Gain:	1.93dBi
Ratings:	Input: DC 19V for Adapter
Device type:	Slave Device(without Radar Detection)
wireless router	The restart time for the router and the module is 120 seconds

4.2 Test Setup Configuration

See test photographs attached in EUT TEST SETUP PHOTOGRAPHS for the actual connections between Product and support equipment.

4.3 Support Equipment

No.	Device Type	Brand	Model	FCC ID	Data Cable	Power Cord
1.	wireless router	Linksys	WRT32X	Q87-WRT3200ACM	N/A	N/A

Notes:

1. All the equipment/cables were placed in the worst-case configuration to maximize the emission during the test.
2. Grounding was established in accordance with the manufacturer's requirements and conditions for the intended use.

Shenzhen NCT Testing Technology Co., Ltd. 2008

4.4 Channel List

For 802.11a/n/ac(20M) Operation in the 5250MHz ~5350 MHz band			
Channel	Frequency	Channel	Frequency
52	5260MHz	60	5300MHz
56	5280MHz	64	5320MHz
For 802.11a/n/ac(20M) Operation in the 5470MHz ~5725 MHz band			
Channel	Frequency	Channel	Frequency
100	5500MHz	124	5620 MHz
104	5520MHz	128	5640 MHz
108	5540MHz	132	5660 MHz
112	5560MHz	136	5680MHz
116	5580MHz	140	5700MHz
120	5600 MHz		

For 802.11n/ac(40M) Operation in the 5250MHz ~5350 MHz band			
Channel	Frequency	Channel	Frequency
54	5270MHz	62	5310MHz
For 802.11n/ac(40M) Operation in the 5470MHz ~5725 MHz band			
Channel	Frequency	Channel	Frequency
102	5510MHz	126	5630MHz
110	5550MHz	134	5670MHz
118	5590MHz		

For 802.11ac(80M) Operation in the 5250MHz ~5350 MHz band			
Channel	Frequency	Channel	Frequency
58	5290MHz	NA	NA
For 802.11ac(80M) Operation in the 5470MHz ~5725 MHz band			
Channel	Frequency	Channel	Frequency
106	5530MHz	122	5640MHz
122	5610 MHz		

4.5 Test Mode

All test mode(s) and condition(s) mentioned were considered and evaluated respectively by performing full tests, the worst data were recorded and reported.

802.11a/n/ac(20M)	5250MHz ~5350 MHz	Channel 52	Channel 56	Channel 64
		5260MHz	5280MHz	5320MHz
802.11n/ac(40M)	5250MHz ~5350 MHz	Channel54	N/A	Channel62
		5270MHz	N/A	5310MHz
802.11ac(80M)	5250MHz ~5350 MHz	N/A	Channel 58	N/A
		N/A	5290MHz	N/A
802.11a/n/ac(20M)	5470MHz ~5725 MHz	Channel 100	Channel116	Channel140
		5500MHz	5580MHz	5700MHz
802.11n/ac(40M)	5470MHz ~5725 MHz	Channel 102	Channel118	Channel 134
		5510MHz	5590MHz	5670MHz
802.11ac(80M)	5470MHz ~5725 MHz	Channel 106	N/A	Channel 122
		5530MHz	N/A	5610MHz

4.6 Test Environment

Humidity(%):	54
Atmospheric Pressure(kPa):	101
Normal Voltage(DC):NV	AC 120V/60Hz
Normal Temperature(℃):NT	23
Low Temperature(℃):LT	0
High Temperature(℃):HT	40

Shenzhen NCT Testing Technology Co., Ltd.
2008

5. TEST FACILITY AND TEST INSTRUMENT USED

5.1 Test Facility

Site Description

EMC Lab. : Accredited by CNAS, 2022-09-27

The certificate is valid until 2028.01.07

The Laboratory has been assessed and proved to be in compliance with CNAS-CL01:2006 (identical to ISO/IEC 17025:2017)

The Certificate Registration Number is L8251

Designation Number: CN1347

Test Firm Registration Number: 894804

Accredited by A2LA, June 14, 2023

The Certificate Registration Number is 6837.01

Accredited by Industry Canada, November 09, 2018

The Conformity Assessment Body Identifier is CN0150

Company Number: 30806

Name of Firm : Shenzhen NCT Testing Technology Co., Ltd.

Site Location : A101&2F B2, Fuqiao 6th Area, Xintian Community, Fuhai Street, Baoan District, Shenzhen, People's Republic of China

5.2 Test Instrument Used

Radiated emission & Radio Frequency Test Equipment

Name	Model No.	Serial No.	Manufacturer	Date of Cal.	Due Date
966 Shielded Room	966 Room	/	EMToni	2022/5/31	2025/5/30
EMI Test Receiver	ESCI	101178	Rohde & Schwarz	2024/6/17	2025/6/16
Spectrum Analyze （10Hz-26.5GHz）	N9020A	MY50510202	Agilent	2024/6/17	2025/6/16
Amplifi (30MHz-1GHz)	BBV 9743 B	00374	SCHNARZBECK	2024/6/17	2025/6/16
Bilog Antenna （30MHz-1GHz）	VULB9162	00473	SCHNARZBECK	2023/3/19	2025/3/18
Horn antenna （1GHz-18GHz）	BBHA 9120 D	02622	SCHNARZBECK	2023/3/19	2025/3/18
Pream plifier （1GHz-18GHz）	BBV 9718D	0024	SCHNARZBECK	2024/6/17	2025/6/16
Spectrum Analyze （1GHz-40GHz）	FSV 40	100952	Rohde & Schwarz	2024/6/17	2025/6/16
Pream plifier （15GHz-40GHz）	BBV 9718D	0024	SCHNARZBECK	2024/6/17	2025/6/16
Broadband Antenna （15GHz-40GHz）	SAS-574	588	A.H.System	2023/3/19	2025/3/18
Loop Antenna (9KHz-30MHz)	FMZB1519B	014	SCHNARZBECK	2024/6/17	2025/6/16
Amplifier (9KHz-30MHz)	CVP 9222 C	00109	SCHNARZBECK	2024/6/17	2025/6/16
MXG Signal Analyzer	N9020A	101178	RS	2024/6/17	2025/6/16
MXG Vector Signal Generator	N5182A	MY50510202	Agilent	2024/6/17	2025/6/16
MXG Analog Signal Generator	N5181A	00374	SCHWARZBECK	2024/6/17	2025/6/16
Power Sensor	TR1029-2	00473	SCHNARZBECK	2024/6/17	2025/6/16
RF Swith	TR1029-1	02622	SCHNARZBECK	2024/6/17	2025/6/16
Cable	DA800-4000MM	NA	DA	2024/6/17	2025/6/16
Cable	DA800-11000MM	NA	DA	2024/6/17	2025/6/16

6. TECHNICAL REQUIREMENTS FOR DFS

6.1 Applicability of DFS Requirements

6.1.1 Applicability of DFS Requirements Prior to use of a Channel

Requirement	Operational Mode		
	Master	Client Without Radar Detection	Client With Radar Detection
Non-Occupancy Period	Yes	Not required	Not required
DFS Detection Threshold	Yes	Not required	Yes
Channel Availability Check Time	Yes	Not required	Not required
U-NII Detection Bandwidth	Yes	Not required	Yes

6.1.2 Applicability of DFS Requirements during Normal Operation

Requirement	Operational Mode	
	Master or Client With Radar Detection	Client Without Radar Detection
DFS Detection Threshold	Yes	Not required
Channel Closing Transmission Time	Yes	Yes
Channel Move Time	Yes	Yes
U-NII Detection Bandwidth	Yes	Not required

Additional requirements for devices with multiple bandwidth modes	Operational Mode	
	Master or Client With Radar Detection	Client Without Radar Detection
U-NII Detection Bandwidth and Statistical Performance Check	All BW modes must be tested	Not required
Channel Move Time and Channel Closing Transmission Time	Test using widest BW mode available	Test using the widest BW mode available for the link
All other tests	Any single BW mode	Not required
Note: Frequencies selected for statistical performance check (Section 7.8.4) should include several frequencies within the radar detection bandwidth and frequencies near the edge of the radar detection bandwidth. For 802.11 devices it is suggested to select frequencies in each of the bonded 20 MHz channels and the channel center frequency.		

6.2 DFS Detection Thresholds and Response Requirement

Below table provides the DFS Detection Thresholds for Master Devices as well as Client Devices incorporating In-Service Monitoring.

DFS Detection Thresholds for Master Devices and Client Devices With Radar Detection.

Maximum Transmit Power	Value (See Notes 1 , 2 and 3)
EIRP ≥ 200 milliwatt	-64 dBm
EIRP < 200 milliwatt and power spectral density < 10 dBm / MHz	-62 dBm
EIRP < 200 milliwatt and that do not meet the power spectral density requirement	-64 dBm
Note 1: This is the level at the input of the receiver assuming a 0 dBi receive antenna. Note 2: Throughout these test procedures an additional 1 dB has been added to the amplitude of the test transmission waveforms to account for variations in measurement equipment. This will ensure that the test signal is at or above the detection threshold level to trigger a DFS response. Note3: EIRP is based on the highest antenna gain. For MIMO devices refer to KDB Publication 662911 D01.	

DFS Response Requirement Values

Parameter	Value
Non-occupancy period	Minimum 30 minutes.
Channel Availability Check Time	60 seconds.
Channel Move Time	10 seconds. (See Note 1.)
Channel Closing Transmission Time	200 milliseconds + an aggregate of 60 milliseconds over remaining 10 second period. (See Notes 1 and 2.)
U-NII Detection Bandwidth	Minimum 100% of the U- NII 99% transmission power bandwidth. (See Note 3.)

Note 1: Channel Move Time and the Channel Closing Transmission Time should be performed with Radar Type 0. The measurement timing begins at the end of the Radar Type 0 burst.
Note 2: The Channel Closing Transmission Time is comprised of 200 milliseconds starting at the beginning of the Channel Move Time plus any additional intermittent control signals required to facilitate a Channel move (an aggregate of 60 milliseconds) during the remainder of the 10 second period. The aggregate duration of control signals will not count quiet periods in between transmissions.
Note 3: During the U-NII Detection Bandwidth detection test, radar type 0 should be used. For each frequency step the minimum percentage of detection is 90 percent. Measurements are performed with no data traffic.

6.3 Radar Test Waveforms

This section provides the parameters for required test waveforms, minimum percentage of successful detections, and the minimum number of trials that must be used for determining DFS conformance. Step intervals of 0.1 microsecond for Pulse Width, 1 microsecond for PRI, 1 MHz for chirp width and 1 for the number of pulses will be utilized for the random determination of specific test waveforms.

6.3.1 Short Pulse Radar Test Waveforms

Radar Type	Pulse Width (μsec)	PRI (μsec)	Number of Pulses	Minimum Percentage of Successful Detection	Minimum Number of Trials
0	1	1428	18	See Note1	See Note1
1		Test A: 15 unique PRI values randomly selected from the list of 23 PRI values in Table 5a	$\text{Roundup}\left\{\left(\frac{1}{360}\right)\cdot\left(\frac{19\cdot 10^6}{\text{PRI}_{\mu sec}}\right)\right\}$	60%	30
		Test B: 15 unique PRI values randomly selected within the range of 518-3066 μsec, with a minimum increment of 1 μsec, excluding PRI values selected in Test A			

2	1-5	150-230	23-29	60%	30
3	6-10	200-500	16-18	60%	30
4	1-20	200-500	12-16	60%	30
Aggregate (Radar Types 1-4)				80%	120
Note 1: Short Pulse Radar Type 0 should be used for the detection bandwidth test, channel move time, and channel closing time tests.					

A minimum of 30 unique waveforms are required for each of the Short Pulse Radar Types 2 through 4. If more than 30 waveforms are used for Short Pulse Radar Types 2 through 4, then each additional waveform must also be unique and not repeated from the previous waveforms. If more than 30 waveforms are used for Short Pulse Radar Type 1, then each additional waveform is generated with Test B and must also be unique and not repeated from the previous waveforms in Tests A or B.

Pulse Repetition Intervals Values for Test A

Pulse Repetition Frequency Number	Pulse Repetition Frequency (Pulses Per Second)	Pulse Repetition Interval (Microseconds)
1	1930.5	518
2	1858.7	538
3	1792.1	558
4	1730.1	578
5	1672.2	598
6	1618.1	618
7	1567.4	638
8	1519.8	658
9	1474.9	678
10	1432.7	698
11	1392.8	718
12	1355	738
13	1319.3	758
14	1285.3	778
15	1253.1	798
16	1222.5	818
17	1193.3	838
18	1165.6	858
19	1139	878
20	1113.6	898
21	1089.3	918
22	1066.1	938
23	326.2	3066

6.3.2 Long Pulse Radar Test Waveform

Radar Type	Pulse Width (μsec)	Chirp Width (MHz)	PRI (μsec)	Number of Pulses per Burst	Number of Bursts	Minimum Percentage of Successful Detection	Minimum Number of Trials
5	50-100	5-20	1000-2000	1-3	8-20	80%	30

The parameters for this waveform are randomly chosen. Thirty unique waveforms are required for the Long Pulse Radar Type waveforms. If more than 30 waveforms are used for the Long Pulse Radar Type waveforms, then each additional waveform must also be unique and not repeated from the previous waveforms.

Each waveform is defined as follows:
1) The transmission period for the Long Pulse Radar test signal is 12 seconds.
2) There are a total of 8 to 20 Bursts in the 12 second period, with the number of Bursts being randomly chosen. This number is Burst Count.
3) Each Burst consists of 1 to 3 pulses, with the number of pulses being randomly chosen. Each Burst within the 12 second sequence may have a different number of pulses.
4) The pulse width is between 50 and 100 microseconds, with the pulse width being randomly chosen. Each pulse within a Burst will have the same pulse width. Pulses in different Bursts may have different pulse widths.
5) Each pulse has a linear frequency modulated chirp between 5 and 20 MHz, with the chirp width being randomly chosen. Each pulse within a transmission period will have the same chirp width. The chirp is centered on the pulse. For example, with a radar frequency of 5300 MHz and a 20 MHz chirped signal, the chirp starts at 5290 MHz and ends at 5310 MHz.
6) If more than one pulse is present in a Burst, the time between the pulses will be between 1000 and 2000 microseconds, with the time being randomly chosen. If three pulses are present in a Burst, the random time interval between the first and second pulses is chosen independently of the random time interval between the second and third pulses.
7) The 12 second transmission period is divided into even intervals. The number of intervals is equal to Burst Count. Each interval is of length (12,000,000 / Burst Count) microseconds. Each interval contains one Burst. The start time for the Burst, relative to the beginning of the interval, is between 1 and [(12,000,000 / Burst Count) – (Total Burst Length) + (One Random PRI Interval)] microseconds, with the start time being randomly chosen. The step interval for the start time is 1 microsecond. The start time for each Burst is chosen randomly.

A representative example of a Long Pulse Radar Type waveform:
1) The total test waveform length is 12 seconds.
2) Eight (8) Bursts are randomly generated for the Burst Count.
3) Burst 1 has 2 randomly generated pulses.
4) The pulse width (for both pulses) is randomly selected to be 75 microseconds.
5) The PRI is randomly selected to be at 1213 microseconds.
6) Bursts 2 through 8 are generated using steps 3 – 5.
7) Each Burst is contained in even intervals of 1,500,000 microseconds. The starting location for Pulse 1, Burst 1 is randomly generated (1 to 1,500,000 minus the total Burst 1 length + 1 random PRI interval) at the 325,001 microsecond step. Bursts 2 through 8 randomly fall in successive 1,500,000 microsecond intervals (i.e. Burst 2 falls in the 1,500,001 – 3,000,000 microsecond range).

Graphical representation of the Long Pulse Radar Test Waveform.

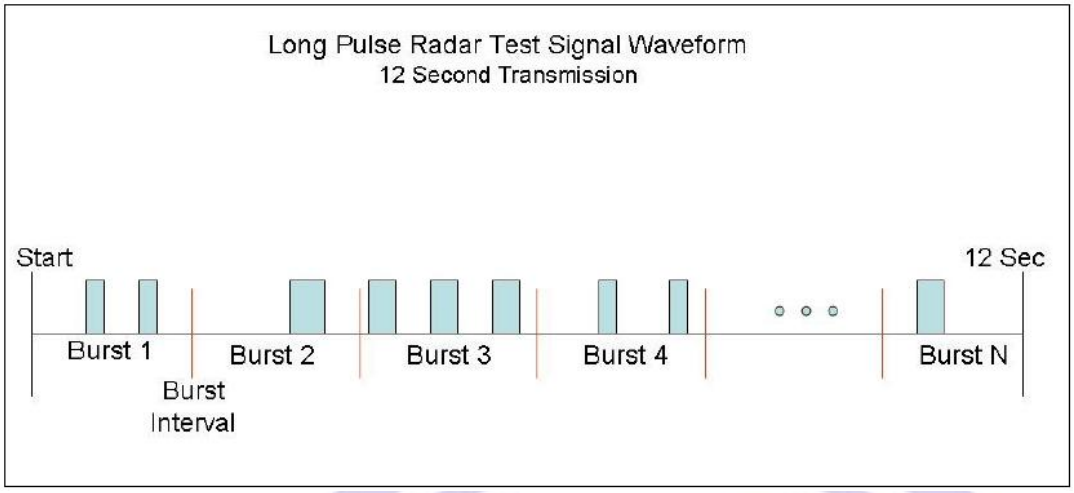

6.3.3 Frequency Hopping Radar Test Waveform

Radar Type	Pulse Width (µsec)	PRI (µsec)	Pulses per Hop	Hopping Rate (kHz)	Hopping Sequence Length (msec)	Minimum Percentage of Successful Detection	Minimum Number of Trials
6	1	333	9	0.333	300	70%	30

For the Frequency Hopping Radar Type, the same *Burst* parameters are used for each waveform. The hopping sequence is different for each waveform and a 100-length segment is selected from the hopping sequence defined by the following algorithm:
The first frequency in a hopping sequence is selected randomly from the group of 475 integer frequencies from 5250 – 5724 MHz. Next, the frequency that was just chosen is removed from the group and a frequency is randomly selected from the remaining 474 frequencies in the group. This process continues until all 475 frequencies are chosen for the set. For selection of a random frequency, the frequencies remaining within the group are always treated as equally likely

Radar Waveform Calibration

The following equipment setup was used to calibrate the conducted radar waveform. A spectrum analyzer was used to establish the test signal level for each radar type. During this process there were replace 50ohm terminal from master and client device and no transmissions by either the master or client device. The spectrum analyzer was switched to the zero span (time domain) at the frequency of the radar waveform generator. Peak detection was utilized. The spectrum analyzer resolution bandwidth (RBW) and video bandwidth (VBW) were set to 3MHz and 3 MHz.
The signal generator amplitude was set so that the power level measured at the spectrum analyzer was -61dBm due to the interference threshold level is not required

6.3.4 DFS test setup

Setup for Master with injection at the Master

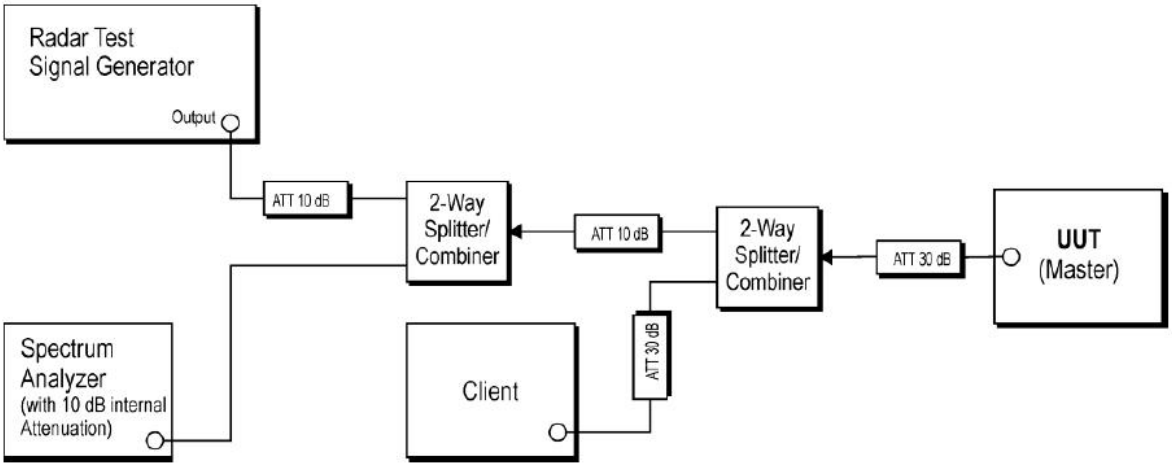

Setup for Client with injection at the Master

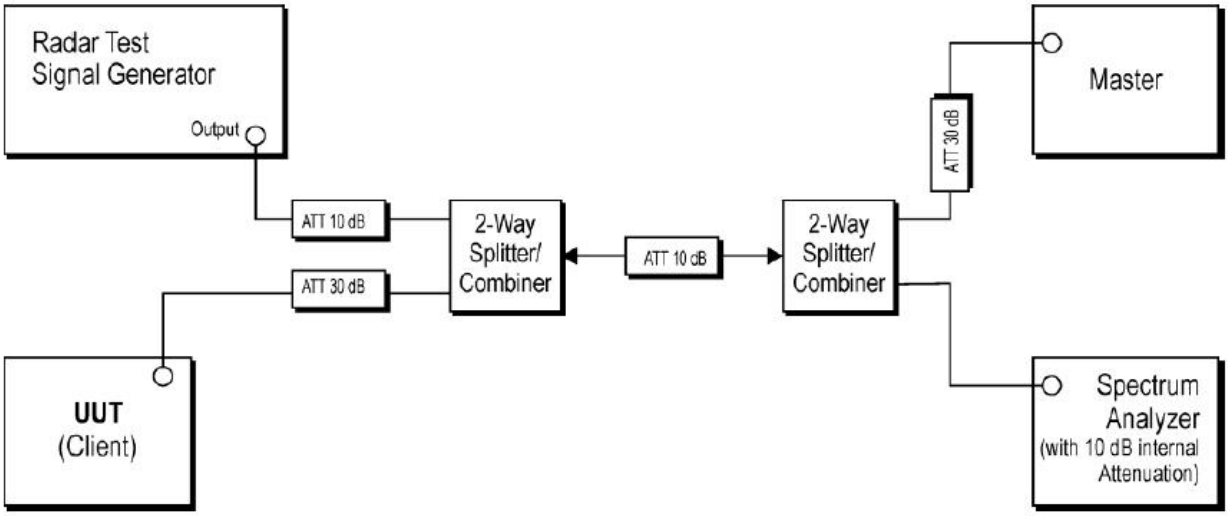

Setup for Client with injection at the Client

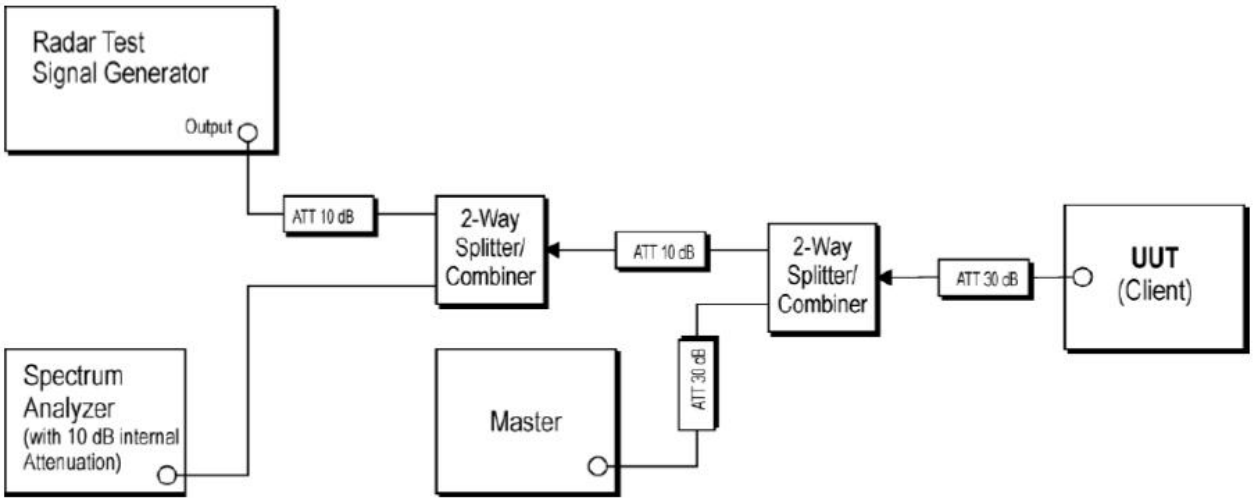

6.3.5 Channel Loading/Data Streaming

Timing plots are required with calculations demonstrating a minimum channel loading of approximately 17% or greater.

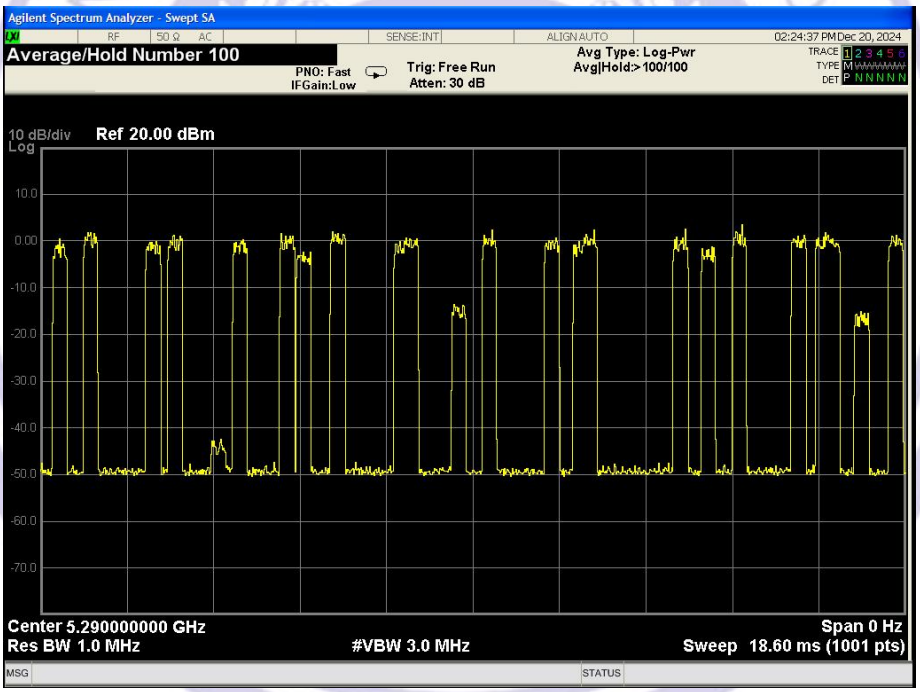

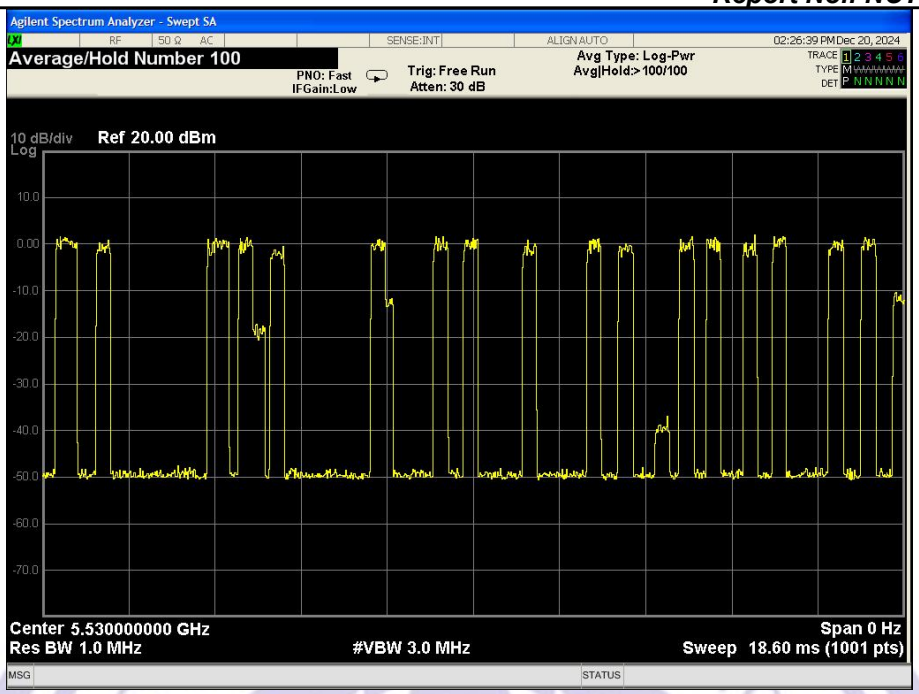

The worst values were recorded only

7. DFS DETECTION THRESHOLD LEVELS

Test result:

DFS Threshold level: -64 dBm.

Calibration plots for each of the required radar waveforms

Radar type0

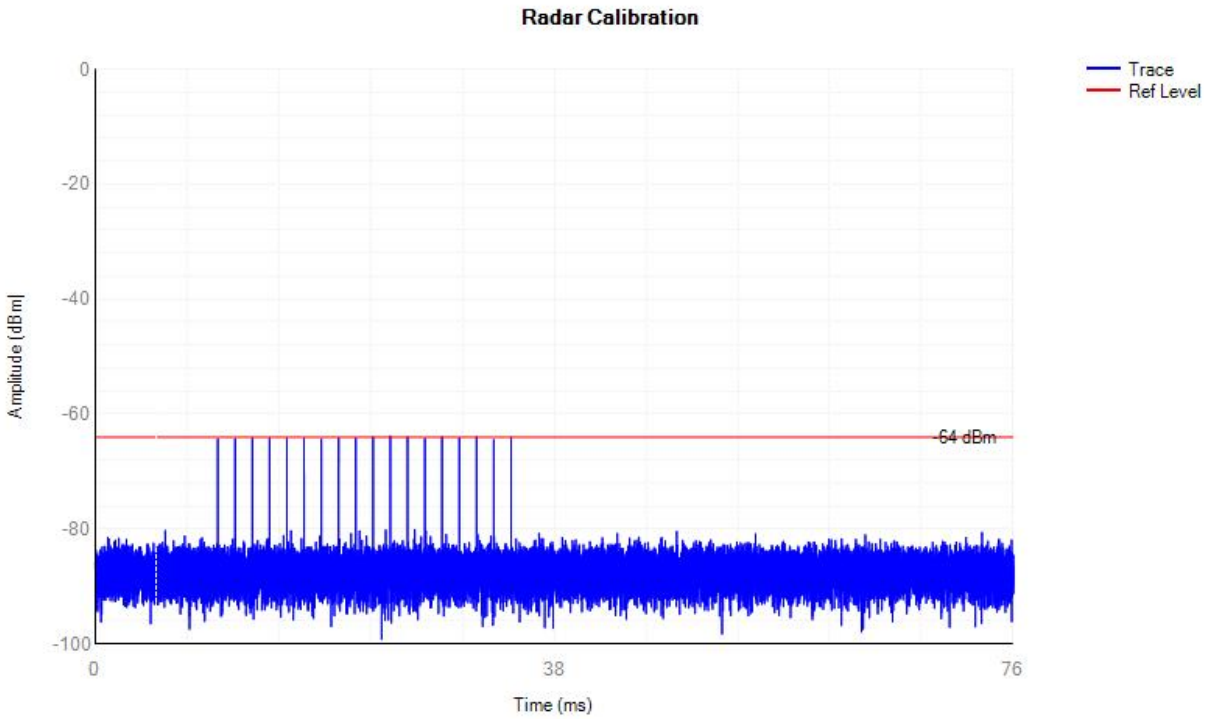

8. CONDUCTED TEST PROCEDURE

1) One frequency will be chosen from the Operating Channels of the UUT within the 5250-5350 MHz or 5470-5725MHz bands.
2) The Client Device (EUT) is set up the above diagram and communications between the Master device and the Client is established.
3) Stream the channel loading test file from the Master Device to the Client Device on the test Channel for the entire period of the test.
4) An additional 1 dB is added to the radar test signal to ensure it is at or above the DFS Detection Threshold, accounting for equipment variations/errors.
5) Observe the transmissions of the UUT at the end of the Burst on the Operating Channel for duration greater than 12 seconds for Radar Type 0 to ensure detection occurs.
6) After the initial radar burst the channel is monitored for 30 minutes to ensure no transmissions or beacons occur. A second monitoring setup is used to verify that the Master and Client have both moved to different channels.

Test Results:
Remark: We test all channels that need to be tested for DFS, including parts of the 5150-5250MHz and 5725-5850MHz that fall in the DFS band, reporting only part of the test pattern and data. In this report, we have identified other parts that are compliant with FCC regulations .

Mode	Channel number	Center frequency	Channel Move Time (s)	Limits(s)	Channel Closing Transmission Time(s)	Limits(s)	Results
802.11ac(HT80)	58	5290	2.1177	10	0.0168	200 milliseconds + an aggregate of 60 milliseconds over remaining 10 second period	Pass
802.11ac(HT80)	106	5530	2.1185		0.0168		Pass

Note:
1. The aggregate duration of all transmissions of the RLAN device on this channel during the Channel Move Time shall be limited to the Channel Closing Transmission Time. The aggregate duration of all transmissions shall not include quiet periods in between transmissions.
2. A reference type radar waveform was introduced to the EUT when 1s after sweep, and the spectrum Analyzer sweep time was set to 12s for monitoring and capturing the plot. A software program was created to collect the trace data and capturing the plot, then automatic calculate the duration time.

Test plot:

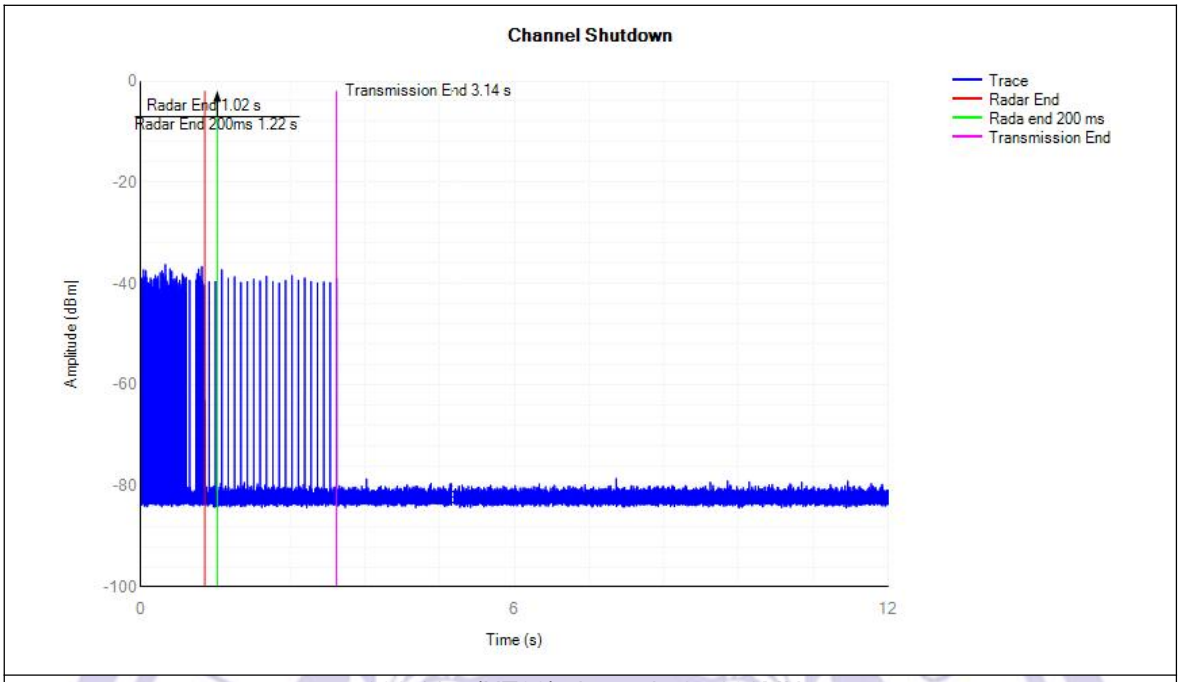

802.11ac(HT80) channel 58 5290MHz

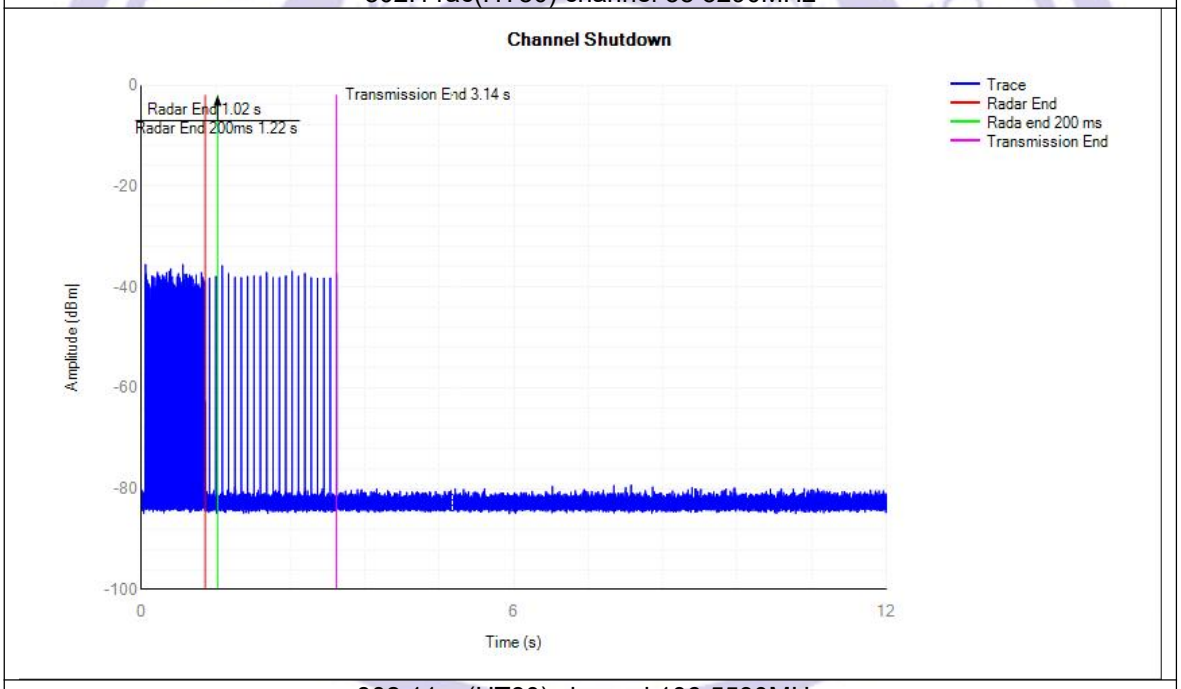

802.11ac(HT80) channel 106 5530MHz

Non-occupancy Period Period(without radar detection)

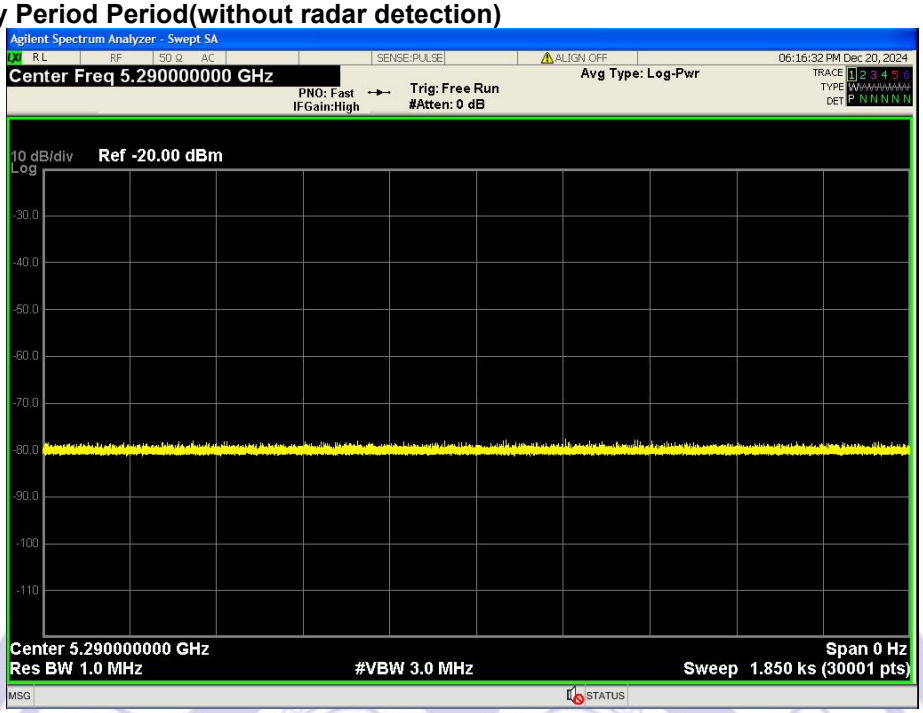

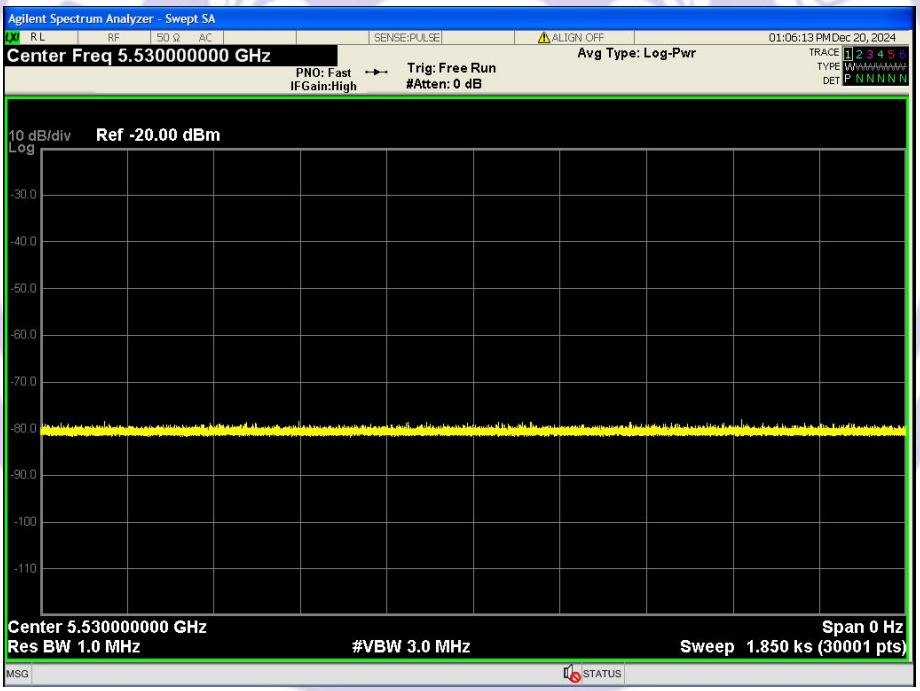

Test Item	Modulation Mode	Freq. (GHz)	Limit	Results
Channel Move Time	AC80	5.3	10s	Pass
Channel Move Time	AC80	5.58	10s	Pass
Non-Occupancy Period	AC80	5.3	30 minutes	Pass
Non-Occupancy Period	AC80	5.58	30 minutes	Pass

※※※※※ **END OF REPORT** ※※※※※

Shenzhen NCT Testing Technology Co., Ltd.
2008