6

k. Put a screw in each of the drilled locations.The screw should pass through the Base Extrusion and the boat deck. If the rubber washers are used, they should sit between the Base Extrusion and boat deck. Make sure to secure the motor with screws on each side of the Base Extrusion.

l. Place a Flat Washer and then a Nylock Nut at the end of each screw as shown and secure. Make sure all hardware is secure.

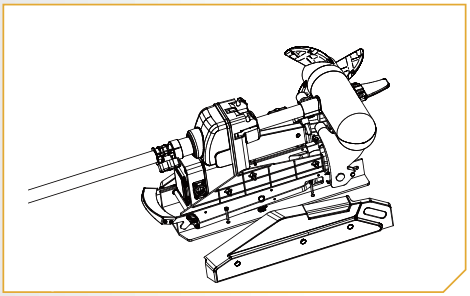

NOTICE: To prevent seizing of the stainless steel hardware, do not use high speed installation tools. Wetting the screws or applying an anti-seize may help prevent seizing.

7

m. Replace the Right Sideplate.

n. Swing the Left Sideplate back into its correct position on the Base Extrusion.

7m

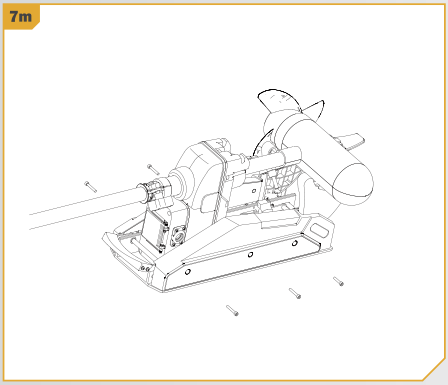

7n

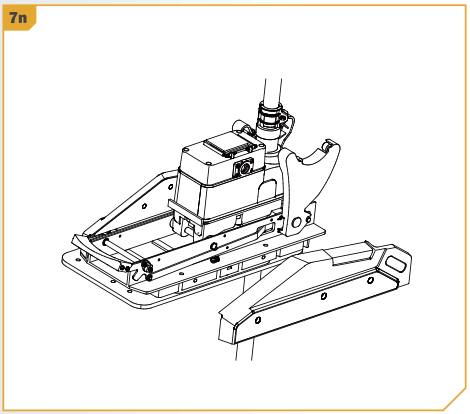

8

o. Replace the four sideplate screws using a Phillips screwdriver. Two of these screws will be located on each side of the mount.

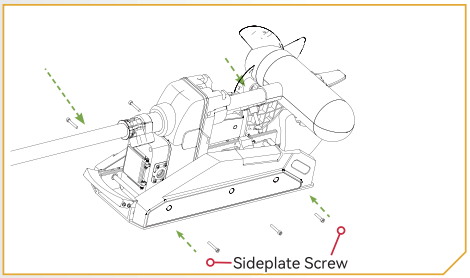

ROUTING THE LINK CABLE

Your trolling motor may be pre-installed with either Link. To learn more about the GPS capabilities available with your Link navigation system, please refer to the corresponding Owner's Manual by visiting minnkotamotors.com.

The Link features require a cable to be connected to an output device. Th is connection is present on the trolling motor below the Control Head, if installed. The system does not need an external wired connection. If only one connection is present, your motor is equipped with Link system. If no connections are present, your motor may or may not be installed with it. Please follow the MAKO SHARK recommendations on routing the cables to optimize mobility and maximize functionality. The routing will be the same regardless of the number of cables present. Use the following instructions to properly route cables.

Cables are shielded to minimize interference. To protect this shielding the cables should not be pulled tight against sharp angles or hard objects. If using cable ties, do not over-tighten. Any excess cable should be bundled in a loose loop of no less than in diameter.

To minimize trolling motor interference, ensure that the fish finder and trolling motor are powered by separate batteries. Please refer to the Battery & Wiring Installation and Motor Wiring Diagram sections of this manual for correct rigging instructions.

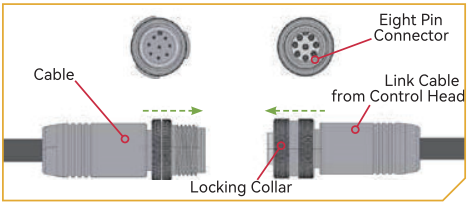

BATTERY & WIRING INSTALLATION

BOAT RIGGING & PRODUCT INSTALLATION

For safety and compliance reasons, we recommend that you follow American Boat and Yacht Council (ABYC) standards when rigging your boat. Altering boat wiring should be completed by a qualified marine technician. The following specifications are for general guidelines only:

⚠ CAUTION

These guidelines apply to general rigging to support your Minn Kota motor. Powering multiple motors or additional electrical devices from the same power circuit may impact the recommended conductor gauge and circuit breaker size. If you are using wire longer than that provided with your unit, follow the conductor gauge and circuit breaker sizing table below. If your wire extension length is more than 25 feet, we recommend that you contact a qualified marine technician.

⚠ CAUTION

An over-current protection device (circuit breaker or fuse) must be used. Coast Guard requirements dictate that each ungrounded current-carrying conductor must be protected by a manually reset, trip-free circuit breaker or fuse. The type (voltage and current rating) of the fuse or circuit breaker must be sized accordingly to the trolling motor used. The table below gives recommended guidelines for circuit breaker sizing.

CONDUCTOR GAUGE AND CIRCUIT BREAKER SIZING TABLE

This conductor and circuit breaker sizing table is only valid for the following assumptions:

1. No more than 2 conductors are bundled together inside of a sheath or conduit outside of engine spaces.
2. Each conductor has 105° C temp rated insulation.
3. No more than 5% voltage drop allowed at full motor power based on published product power requirements.

Motor Thrust / Model	Max Amp Draw	Circuit Breaker	Wire Extension Length				
			5 feet	10 feet	15 feet	20 feet	25 feet
30 lb.	30	50 Amp @ 12 VDC	10 AWG	10 AWG	8 AWG	6 AWG	4 AWG
40 lb., 45 lb.	42		10 AWG	8 AWG	6 AWG	4 AWG	4 AWG
50 lb., 55 lb.	50	60 Amp @ 12 VDC	8 AWG	6 AWG	4 AWG	4 AWG	2 AWG
70 lb.	42	50 Amp @ 24 VDC	10 AWG	10 AWG	8 AWG	8 AWG	6 AWG
80 lb.	56	60 Amp @ 24 VDC	8 AWG	8 AWG	8 AWG	6 AWG	6 AWG
101 lb.	46	50 Amp @ 36 VDC	8 AWG	8 AWG	8 AWG	8 AWG	8 AWG
Engine Mount 101	50	60 Amp @ 36 VDC	8 AWG	8 AWG	8 AWG	8 AWG	8 AWG
112 lb.	52	60 Amp @ 36 VDC	8 AWG	8 AWG	8 AWG	8 AWG	8 AWG
Engine Mount 160	116	(2) x 60 Amp @ 24 VDC	6 AWG	6 AWG	4 AWG	2 AWG	2 AWG
E-Driv	40	50 Amp @ 48 VDC	10 AWG	10 AWG	10 AWG	10 AWG	10 AWG

NOTICE: Wire Extension Length refers to the distance from the batteries to the trolling motor leads. Consult website for available thrust options. Maximum Amp Draw values only occur intermittently during select conditions and should not be used as continuous amp load ratings.

Reference

United States Code of Federal Regulations: 33 CFR 183 – Boats and Associated Equipment ABYC E-11: AC and DC Electrical Systems on Boats

SELECTING THE CORRECT BATTERIES

The motor will operate with any lead acid, deep cycle marine 12 volt battery/batteries. For best results, use a deep cycle, marine battery with at least a 60 amp-hour rating. Maintain battery at full charge. Proper care will ensure having battery power when you need it and will significantly improve the battery life. Failure to recharge lead-acid batteries (within 12-24 hours) is the leading cause of premature battery failure. Use a multi-stage charger to avoid overcharging. We offer a wide selection of chargers to fit your charging needs. If you are using a crank battery to start a gasoline outboard, we recommend that you use a separate deep cycle marine battery/batteries for your MAKOSHARK trolling motor. For more information on battery selection and rigging. please check with related departments.

⚠ WARNING

Never connect the (+) and the (–) terminals of the same battery together. Take care that no metal object can fall onto the battery and short the terminals. This would immediately lead to a short and extreme fire danger.

⚠ CAUTION

Refer to “Conductor Gauge and Circuit Breaker Sizing Table” in the previous section to find the appropriate circuit breaker or fuse for your motor.

⚠ CAUTION

Please read the following information before connecting your motor to your batteries in order to avoid damaging your motor and/or voiding your warranty.

ADDITIONAL CONSIDERATIONS

Using DC or Alternator Chargers

Your MAKOSHARK trolling motor may be designed with an internal bonding wire to reduce sonar interference. Most alternator charging systems do not account for this bonding wire, and connect the negative posts of the trolling motor batteries to the negative posts of the crank/starting battery. These external connections can damage connected electronics and the electrical system of your trolling motor, voiding your warranty. Review your charger' s manual carefully or consult the manufacturer prior to use to ensure your charger iscompatible.

Additional Accessories Connected to Trolling Motor Batteries

Significant damage to your MAKOSHARK motor, your boat electronics, and your boat can occur if incorrect connections are made between your trolling motor batteries and other battery systems. MAKOSHARK recommends using an exclusive battery system for your trolling motor. Where possible, accessories should be connected to a separate battery system. Radios and sonar units should not be connected to any trolling motor battery systems as interference from the trolling motor is unavoidable. If connecting any additional accessories to any trolling motor battery system, or making connections between the trolling motor batteries and other battery systems on the boat, be sure to carefully observe the information below. The negative (-) connection must be connected to the negative terminal of the same battery that the trolling motor negative lead connects to. In the diagrams below this battery is labeled "Low Side" Battery.Connecting to any other trolling motor battery will input positive voltage into the "ground" of that accessory, which can cause excess corrosion. Any damage caused by incorrect connections between battery systems will not be covered under warranty.

The negative (-) connection must be connected to the negative terminal of the same battery that the trolling motor negative lead connects to. In the diagrams below this battery is labeled "Low Side" Battery. Connecting to any other trolling motor battery will input positive voltage into the "ground" of that accessory, which can cause excess corrosion. Any damage caused by incorrect connections between battery systems will not be covered under warranty.

Automatic Jump Start Systems and Selector Switches

Automatic jump start systems and selector switches tie the negatives of the connected batteries together. Connecting these systems to the "High Side" Battery or "Middle" Battery in the diagrams below and will cause significant damage to your trolling motor and electronics. The only trolling motor battery that is safe to connect to one of these systems is the "Low Side" Battery.

CONNECTING THE BATTERIES

12-Volt Systems

1. Make sure that the motor is switched off (speed selector on "OFF" or "0").
2. Connect positive (+) red lead to positive (+) battery terminal.
3. Connect negative (−) black lead to negative (−) battery terminal.

⚠ WARNING

For safety reasons do not switch the motor on until the propeller is in the water. If installing a leadwire plug, observe proper polarity and follow instructions in your boat owner's manual.

PARTS DIAGRAM & PARTS LIST

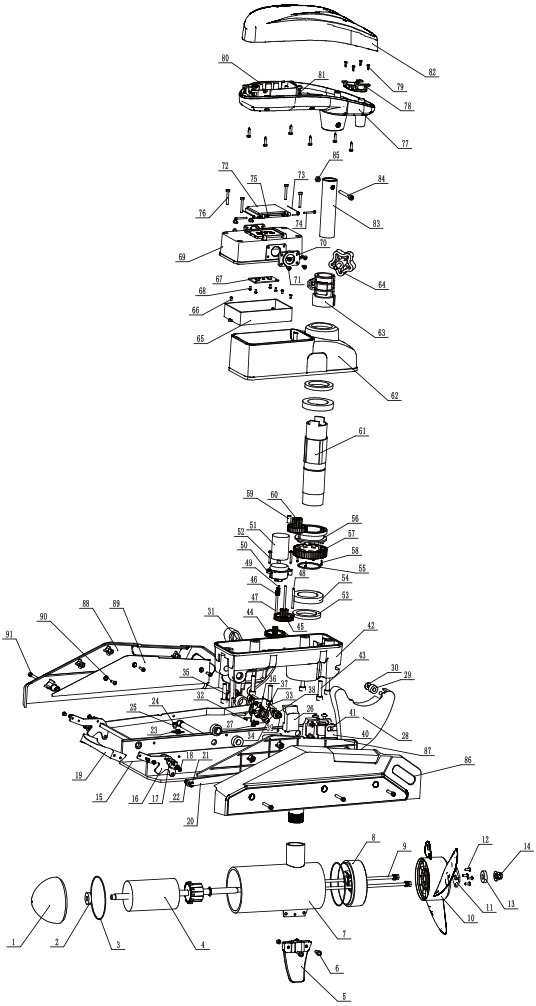

PARTS DIAGRAM & PARTS LIT 1

item	description	quantity	specification
1	Motor front cover	1	
2	Deep groove ball bearings	1	61900-2RS
3	O-ring seals	1	6*5
4	Rotor assembly	1	
5	Fins	1	
6	m5*16 hexagonal bolts	2	
7	Motor barrel	1	
8	Motor backseat	1	
9	m6*232 bolts	2	
10	Propeller	1	
11	Propeller pressure plate	1	
12	Cross recessed pan head tapping screws	4	4. 2*16
13	Anti-corrosion zinc block	1	
14	m10 lock nuts	1	
15	Base plate	1	
16	Pedal support	2	
17	Square shaft cover	2	
18	Cross recessed pan head screws	18	M4*6
19	Pedal	1	
20	Left and right connecting rods	1	
21	E-Clip	2	d5
22	Slotted Pins	2	
23	Tension Spring	2	
25	Tension spring spacer	2	
26	Cross recessed large round head screws	2	m5*10
26	Gearbox left and right spacers	1	
27	Copper bushing	2	
28	Left and right support plate	1	
29	Pulley	4	
30	Cross recessed pan head screws	4	3. 5*9. 5
31	Lower housing sealing strip	1	
32	Torsion spring	2	
33	Torsion Spring Plate	2	
34	Cross recessed pan head tapping screws	8	3. 5*9. 5
35	M14*1. 5 studs	2	
36	Elastic spring for shaft	4	
37	Support plate spacer	2	
38	Igus spacer	4	D10*D18*1
39	Elastic Circlips for Shaft	2	d10
40	Fixed wall plate	2	
41	Cross recessed large flat head screws	4	6*8
42	Gearbox lower housing	1	
43	Hexagonsocket head cap screws	6	8*35
44	Primary reduction gear	1	
45	Secondary reduction gear	1	

item	description	quantity	specification
46	Main gear	1	
47	Cylindrical pin	2	4*60
48	Cylindrical pin	1	4*45
49	Cross recessed pan head screws	2	4*6
50	Motor Support Block	1	
51	Motor motor	1	
52	Cross recessed pan head screws	2	4*20
53	Double Lip TC Simmerring Oil Seal	2	45*62*7
54	Deep Groove Ball Bearing	2	61909-zz
55	Shaft Retaining Ring	1	d47
56	Coupling	1	
57	51-tooth output gears	1	
58	Cross recessed pan head tapping screws	4	2. 9*8
59	Secondary reduction gear spacer	1	
60	Tertiary reduction gears	1	
61	Aluminumtube output shaft	1	
62	Gearbox upper housing	1	
63	Left and right positioning latches	2	
64	Locking handle	1	m8
65	Control Plate	1	
66	Cross recessed pan head screws	3	3*6
67	LampPlate Assembly	1	
68	Cross recessed pan head screws	4	3*6
69	Upper Housing Circuit Board Cover	1	
70	Waterproof Pressure Plate	2	
71	Cross recessed large flat head screws	8	4*10
72	Indicator LampPlastic Housing	1	
73	Plastic Cover Closing Spring	2	
74	Hexagonsocket cheese head screws	2	3*25
75	Lock nuts	2	
76	Hexagonsocket cheese head screws	4	4*30
77	Upper Rudder Lower Housing	1	
78	Spring Wire Plate	1	
79	Screws	4	
80	Signal Receiver	1	
81	Cross recessed pan head screws	4	2. 9*9. 5
82	Upper rudder upper housing	1	
83	Intermediate support tube	1	
84	Hexagonsocket head cap screws	1	6*50
85	Lock Nut	1	m6
86	Right cowling	1	
87	Right cowling cover	1	
88	Left housing	1	
89	Left Cover Cover Plate	1	
90	Cross recessed pan head tapping screws	6	4. 2*16
91	Cross recessed large flat head screws	6	5*14

MAKO SHARK

MAKO TECHNOLOGIES (TAIZHOU)CO.,LTD.

Manufacturer Address:#2 Jintang North RD,East District,Wenling City,Zhejiang Province 317511, China.
Design Office: 2809 Fairfield Ave.Greensboro,NC 27408,USA.
Email：sales@makoshark.cn
Tel:0086 57681688988
Wechat:Makoshark-USA

Scan the code to contact us

FCC Warnning:

This equipment has been tested and found to comply with the limits for a Class B digital device, pursuant to part 15 of the FCC Rules. These limits are designed to provide reasonable protection againstharmful interference in a residential installation. This equipment generates, uses and can radiateradio frequency energy and, if not installed and used in accordance with the instructions, maycause harmful interference to radio communications. However, there is no guarantee thatinterference will not occur in a particular installation. If this equipment does cause harmfulinterference to radio or television reception, which can be determined by turning the equipmentoff and on, the user is encouraged to try to correct the interference by one or more of thefollowing measures:

- Reorient or relocate the receiving antenna.
- Increase the separation between the equipment and receiver.
- Connect the equipment into an outlet on a circuit different from that to which the receiver is connected.
- Consult the dealer or an experienced radio/TV technician for help.

Caution: Any changes or modifications to this device not explicitly approved by manufacturer could void your authority to operate this equipment.

This device complies with part 15 of the FCC Rules. Operation is subject to the following two conditions:

(1)This device may not cause harmful interference, and (2) this device must accept any interference received, including interference that may cause undesired operation.

This equipment complies with FCC radiation exposure limits set forth for an uncontrolled environment. This equipment should be installed and operated with minimum distance 0cm between the radiator and your body.