**Important reminder:**

In case of electronic failure, please click "Reset" on the app settings page to restoreoperation after the machine is connected to the network !

**MORE COMFORTABLE AND CLEAN LIFE WITH PETS**

Please scan the code to watch **the guide video.**

+ Smart Cat Litter Box +

# User Manual

# FOR THE FIRST USE

1、Please place the machine on a firm and flat ground.
2、Please add litter no higher than MAX line after placing the machine well.
3、Please power on the machine and wait it to finish self-check. Then itis ready for cat to use.

# CONTENT


FOR THE FIRST USE.....01
I INSTRUCTIONS FOR THE FIRST USE.....03
II APP.....07
III OPERATING INSTRUCTIONS.....11
IV FAULT SELF-CHECK METHOD.....28
V FAQ.....29
VI PRODUCT LIST.....31
VII INTRODUCTION OF CONTROL PANEL.....32
VIII CIRCUIT DIAGRAM.....32
IX Filter and Bottom tray Disassembly & Assembly.....33
X PARAMETERS AND SPECIFICATIONS.....34




## Cautions:

1.Please install and use this device strictly according to the instructions.
2.Please use it in an indoor environment, do not place it in direct sunlight, and keep it away from fire sources.
3.Please place the device on a flat and hard ground, and do not place articles on the top of the device.
4.Do not drag or place vigorously during placement to avoid device damage.
5.Kittens weighing less than 1kg and lactating cats should not use the auto cleaning mode of the device.
6.It is strictly forbidden to soak or immerse the host part of this device.
7.Please unplug the power cord when moving,cleaning the device or not using it for a long time.
8.Please use the original power adapter to avoid damage to the device or potential safety hazards.
9. If children use this device, please make sure to use it under the guidance of an adult.
10. Please perform maintenance under the guidance of professionals to avoid all kinds of damages.
11.If you encounter product use problems, please contact customer service.
12.Please read this manual carefully before.Once installed and used, it means that you have carefully read and accepted the following safety instructions.
13.If the product does not work properly due to other unknown conditions, and you do not have time to refer to the instructions, please restart the power.

# I INSTRUCTIONS FOR THE FIRST USE

## 1.1 Unpacking:

Turn over the carton to cut the tape from the bottom, then turn over back the carton to pull up the carton vertically.

## 1.2 Placement:

Place the machine on the flat ground and make sure all four feet of the product are in contact with the ground. Items with a height of more than 5CM shall not be placed within 30CM in front of the product, so as not to affect the cat identification sensor outside the product.

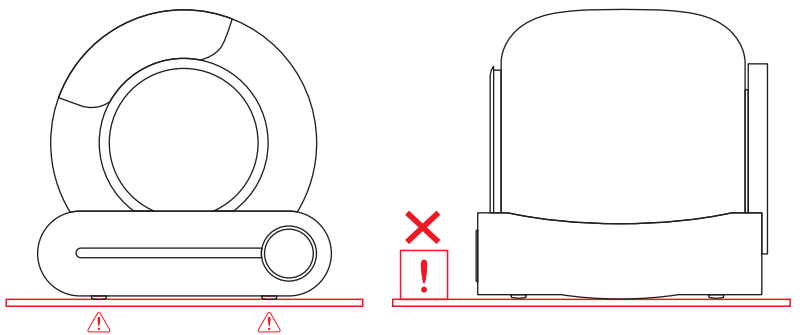

## Notice:

- ✓ The four feet of the product must be in contact with a firm flat ground!
- × Place the machine on soft carpet.
- × Place the two front feet of the machine on the cat litter mat or carpet.



## 1.3 Accessories(in litter storage box):

Adapter*1 Manual*1

Garbage bag(45*50mm)*1(roll)

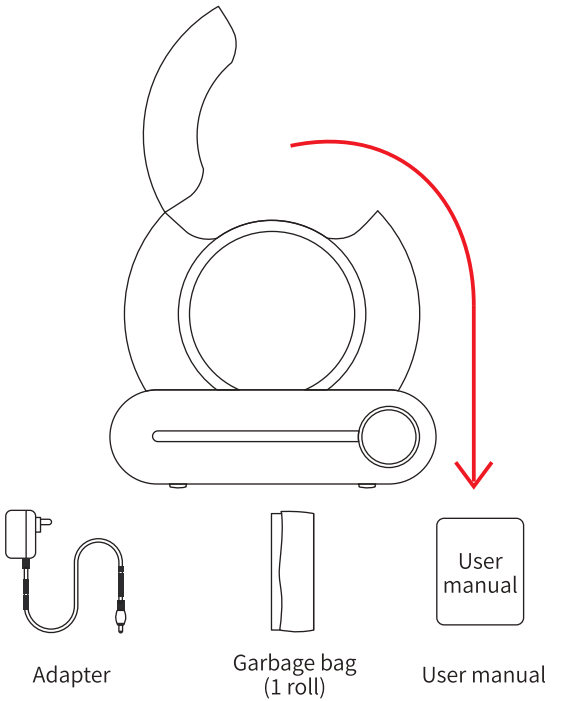


## Notice:

Please observe the installation method of garbage bags, or scan the code below to watch the video.

## 1.4 Add litter sand:

Make sure the leveled litter height is between the MAX line and the MIN line.(The amount of sand can be adjusted according to the actual situation.)

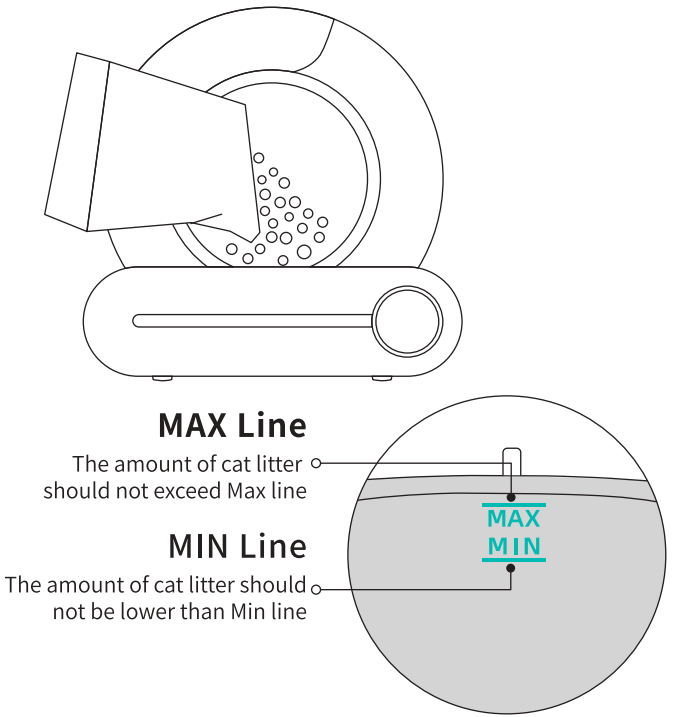




## 1.5 Use:

1.5.1 Power on with adapter and wait the machine to self-check for about 3-8 minutes.It will automatically enter the state of sensing after self-check, no need to change its program.

1.5.2 After the cat leaves, the product will automatically clean up the clumped cat excrement in about 3 minutes,last for 4 minutes.

1.5.3 After cleaning, the product will automatically start the smell cleaning function, and last for 30 minutes.

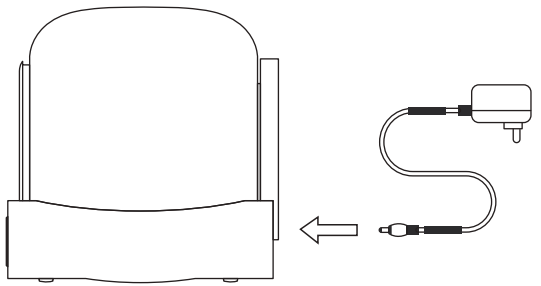

## Notice:

× Pick up or drag the product after powering up.(This will interfere with weight calibration in the reset program.)

①If you place the product in a narrow space or there is an infrared interference source in front of the product, the product self-check may take about 8 minutes.Please wait patiently.

②If the product detected that the space is not suitable for its infrared sensor to work, the infrared detection function will be automatically disabled after self-check is completed.But the weight detection system inside the product will assume the judgment work of whether the cat enters.

③During the clearing process, all keys are suspended. If you need to perform other functions, please wait until the clearing process is complete.

# II APP

## 2.1 Overseas users

Method 1: You can scan the above icon with your mobile phone

Method 2:You can download "tuya" App and install it by search it in the App store.

## 2.2 Networking:

2.2.1 Confirm that the phone is connected to 2.4G WiFi, then turn on Bluetooth and Location.

2.2.2 Please press' Auto 'for 2 seconds. When you hear a' beep 'sound, the machine starts to enter the distribution network mode. Open the mobile app for pairing, and the WIFI indicator light will turn on when the reception is successful. If the connection is not successful, it will remain turned off.

2.2.3 Open your phone App to add equipment or scan automatically.

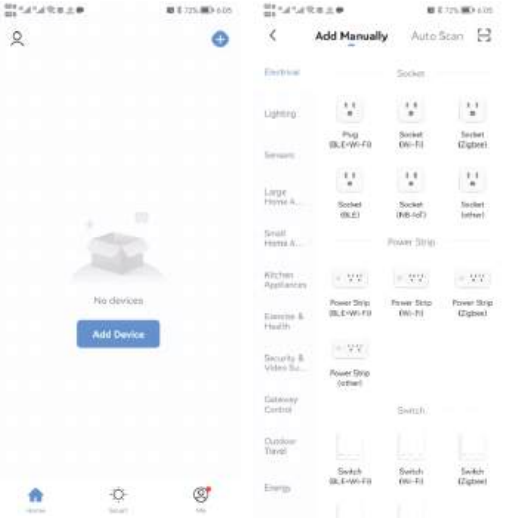

2.2.4 After scanning to the machine, click the icon

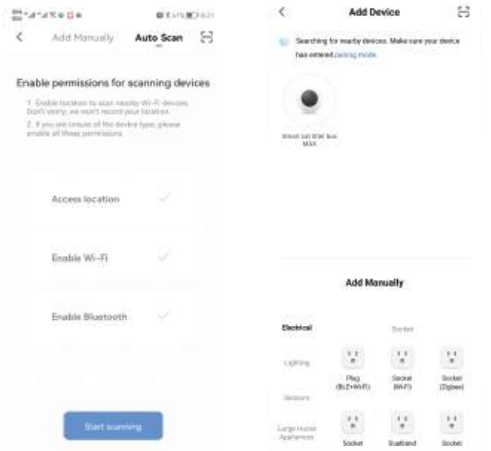


2.2.5 Continue “Next" after inputting WiFi code and wait to connect.

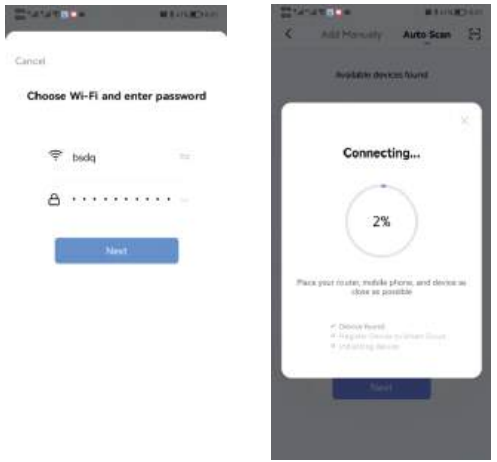




2.2.6 Enter APP after connecting.

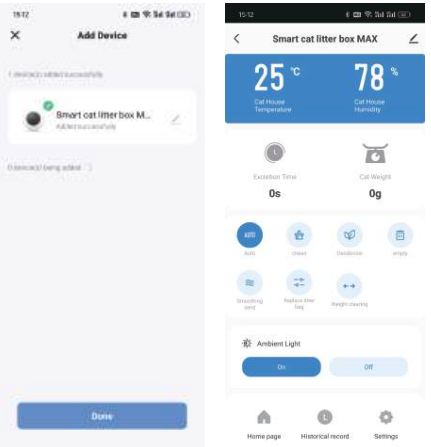


## Notice:

If the network configuration fails or a timeout message is displayed, check the following possibilities:

①Whether WiFi, Bluetooth, and Location switch are enabled at the same time.
②Whether the WiFi is in 2.4G band and whether the phone is connected to 2.4G band WiFi network.(The product cannot recognize the 5G band network.)
③Whether the WiFi indicator on the panel is flashing during network configuration.
④Whether the WiFi network in your home is faulty or down, please check whether other devices can use the network normally.
⑤Whether the WiFi password is correct.
⑥Whether the WiFi signal is too bad, please move the machine to a nearby router and reconnect.
⑦The router connects to many wireless devices, causing IP address conflicts.
⑧For dual-frequency routers,the network cannot be configured directly. Users need to separate 2.4G and 5G into independent channels in router Settings, and then select 2.4G channel for network configuration.

# III OPERATING INSTRUCTIONS

## 3.1 Auto:

Click“Auto”on the panel or on the App to start auto sensing for cats in and out.
(It will open automatically after the product is powered on and self-checked.)

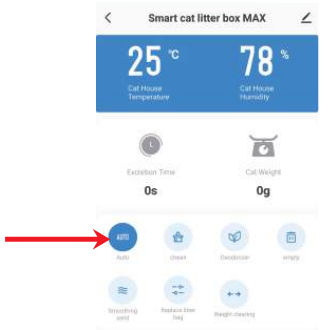


### Notice:

①Please click“Auto"on the panel or on the App to close auto sensing, if you have kittens less than 1kg or the cat is pregnant.Then click “Clean” by your hand according to the actual use of the machine.
②If you are using litter that clumps quickly, you can adjust the "cleaning wait time" in the App, such as 1 minute, to clean the litter as quickly as possible and reduce the smell. If you are a multi-cat family, you can adjust the "cleaning interval" in the App, for example 30 minutes, so as to avoid repeated ineffective cleaning of the product.
③If the cat enters the bin for more than 10 seconds, the cat is judged to have potty behavior. After the cat leaves for 3 minutes, the automatic cleaning procedure will be performed.(The default interval between cleanups is 15 minutes to prevent the product from being started too frequently during multiple cats use. If the machine don't work after your second cat pees, it may because the interval these two pees is less than 15 minutes.)
④The button on the App cannot be closed/opened or synchronized with the panel temporarily, please check the network status or re-configure the network or click the corresponding button on the App and repeat once ortwice.



## 3.2 Clean:

Click“Clean”on the panel or on the App to start clearing immediately.

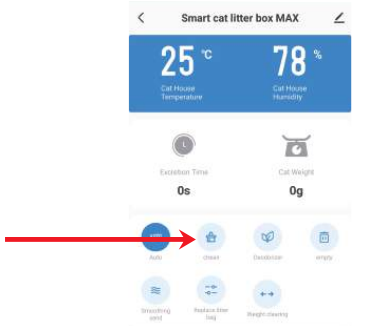


### Notice:

①During the clearing process, all keys are suspended. If you need to perform other functions, please wait until the clearing process is complete.
②Prolong the waiting time for cleaning in phone App when the cat has diarrhea, so as to allow the cat litter to take enough time to clump and reduce the pollution of soft feces to the ball bin.
③If you have restarted the machine, the waiting time of“Clean”procedure will be restored to the default value 3 minutes, which can be reset in the APP if necessary.(setting range: 0 to 60 minutes)
④Prolong the interval time between two clearings when you have multiple cats,so as to prevent repeated cleaning of products.
⑤If you have restarted the machine, the interval time between two clearings will be restored to the default value 15 minutes, which can be reset in the APP if necessary.(setting range: 0 to 120 minutes)

## 3.3 Add cat litter:

Method 1:

In “Auto” mode, when the adding cat litter is more than 1kg, the "Auto" will flash. After 30 minutes, the cat litter will be automatically smoothed and the weight will be automatically calibrated. If you think 30 minutes is too long to wait, please long press the “Remove odor"button for 2 or more seconds.The sand will be smoothed immediately and the weight will be calibrated immediately, Or click "weight clearing" on the app to use it.

Method 2:

Power off the machine, then powerit on again after adding sand.

### Recommended suitable cat litter:

Mineral litter、Bentonite litter

### Compatibility Cat litter:

①Tofu litter (diameter not more than 2.5mm, length not more than 15mm)
②Mixed litter of Tofu litter and Bentonite litter (diameter not more than 2.5mm, length not more than 15mm).

### Cat litter that is not recommended:

①Crystal litter, crystal litter can not clump well, which will bring a serious cleaning burden to the inner wall of the cat litter basin.
②Tofu litter with the length of more than 15mm, poor fluidity and filtration, there will be some stuck inside the filter. This phenomenon can also be alleviated by adjusting the parameter to 6 by “litter surface calibration” on the App.
③Low-density cat litter, such as pine wood cat litter and activated carbon cat litter, it is difficult to rely on its own weight to pass through the filter. Some of them will be stuck inside the filter. This phenomenon can also be alleviated by adjusting the parameter to 6 by “sand surface calibration” on the App.

## Notice:

①The machine won't stop when it is smoothing sand even cat enters in at this moment.But don't worry.The machine only swing in some angles, this swing won't hurt cat.(Besides this situation, the machine have protection function. It will stop immediately once cat walks close to the entrance during clearing.)
②Please make sure the height of the sand is between MIN line and MAX line after adding.If not, please adjust it with method 2.
③You can find the sand surface correction option on the App to adjust the position of the sand.(In grade 0, the sand surface is tilted to the right, and in grade 6, the sand surface is tilted to the left.)



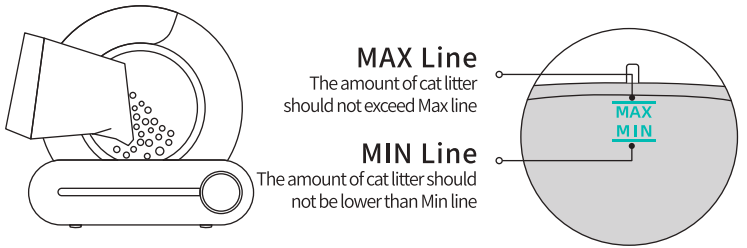


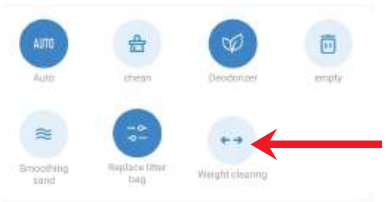


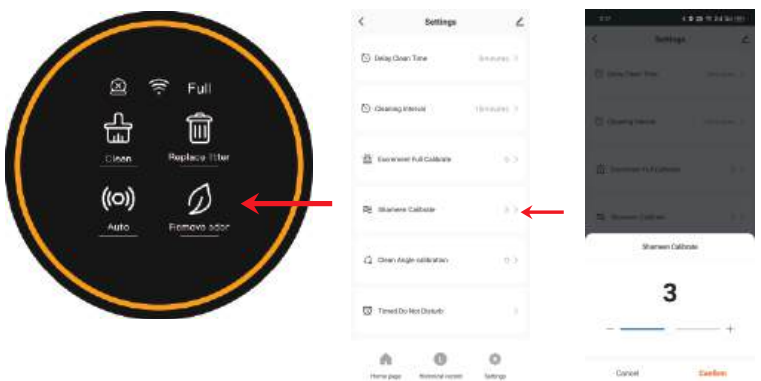

## 3.4 Replace litter:

①Replace the garbage bag with an empty one (to avoid that the original one is already full of litters);

②Make sure the rest sand is close to MIN line (to avoid the overflow when the bin rotates);

③Press“Replace Litter” for 2 seconds,then wait the machine to clear the rest sand;(about 3 minutes)

④Replace the garbage bag with an empty one again after clearing sand;

## Notice:

①Click“Replace Litter”again to cancel if you click it by mistake or if you find you have forgot to replace the garbage bag first.

②For fine mineral sand, when to replace the bag(step ①) , to avoid the overflow of mineral sand from the mouth of the bag, you can firstly press "Clean" for 2 seconds; then the litter bin will rotate 90° counterclockwise to ensure that the mouth of the bag is upward when replacing. After bag replacement, repeat③and ④.

③Or click on the app“Repiace litter bag”After changing, click back.



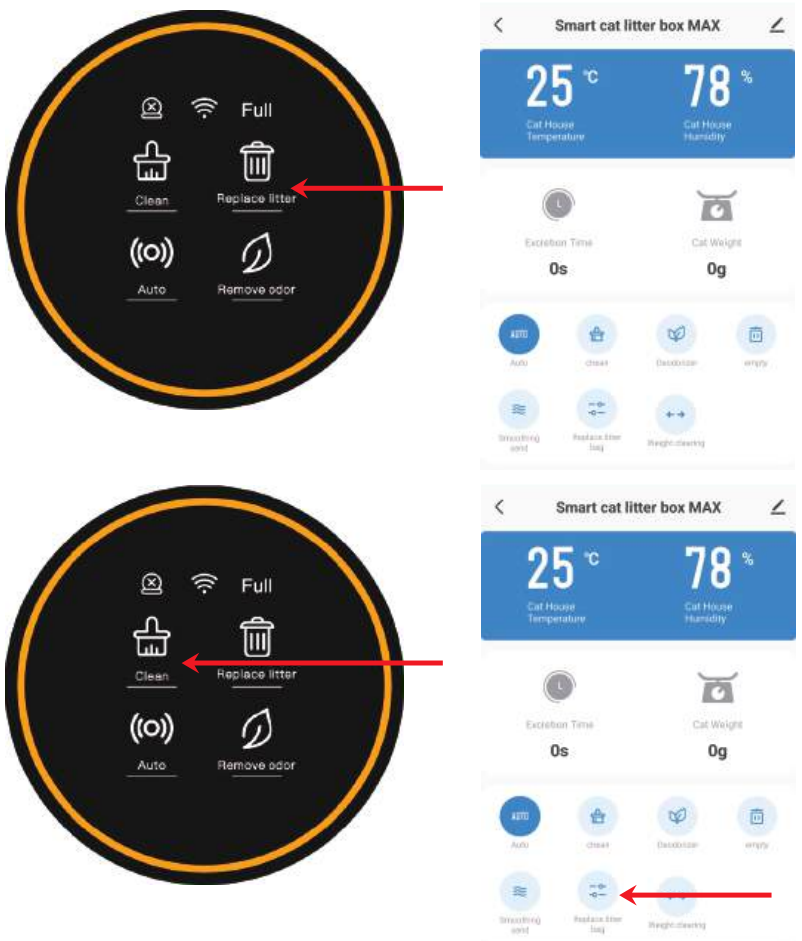

## 3.5 Remove Odor:

Method 1 :
Click “Remove Odor” on the panel or click “Odorless” on your phone App.
Method 2
Set regular work on your phone App.

## Notice:

①The machine will remove odor automatically for 30 minutes after every clearing.
②It will stop automatically once cat enters in, continue to work after cat leave.

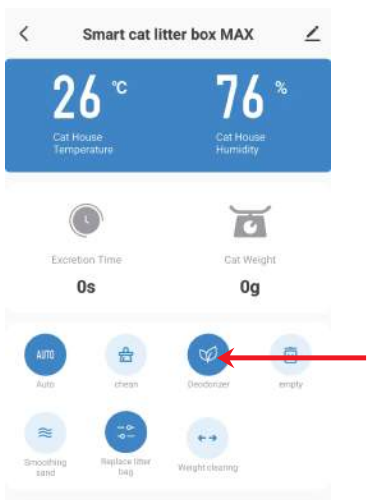




## 3.6 Replace garbage bag:

When indicator“Full”lights up, you need to replace the garbage bag.

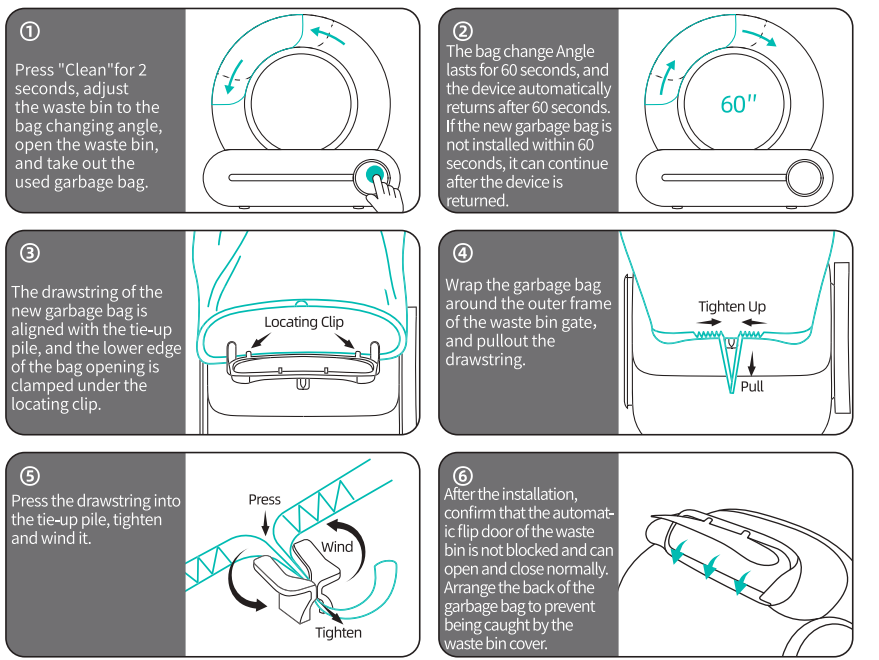

## Notice:

①The“Full” prompt is only a reference value.When using different types of cat litter, its volume, density and fluidity will affect the judgement of “Full”prompt. In the APP, you can adjust the delay of“Full”prompt according to your own use.The default value is 0(there is still a little space in bag for garbage), and the maximum value can be adjusted to 15.

②If you have restarted the machine, the delay of “Full”prompt will be restored to the default value 0, which can be reset in the APP if necessary.

③Normally, the storage capacity of one cat can reach 15 days, and three cats can reach 5 days. Users can replace the garbage bag every 5 days depending on the number of cats or temperature conditions.

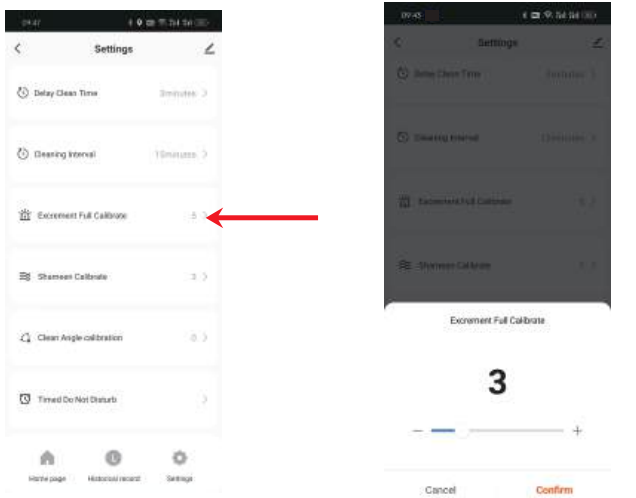

## 3.7 Unable to shovel sand:

①Open the app client and click Settings in the lower right corner

②Find the "clean Angle calibration" option, there are 0-5 gears to choose from, users can choose the gear according to usage habits.

③The cleaning angle is normal at 0 and larger at 5.

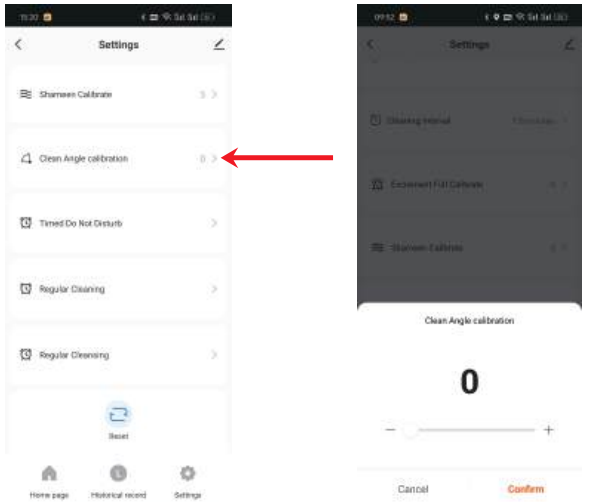


## Notice:

If you cannot take out the trash, please adjust appropriately



## 3.8 Solution for product failure

①Open the app client and click Settings in the lower right corner

②Find "Reset" and click it to restore the factory settings with one click.

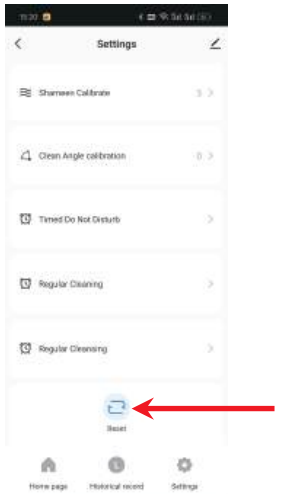


## Notice:

Do not use this function unless it is necessary, and do not use it repeatedly. If you encounter a problem that cannot be solved, please contact customer service.

## 3.9 Wash bin:

①Please power off the machine first!
②Open the buckle of the barrel compartment, lift the bin.
③Dry the bin before loading it back to the base!

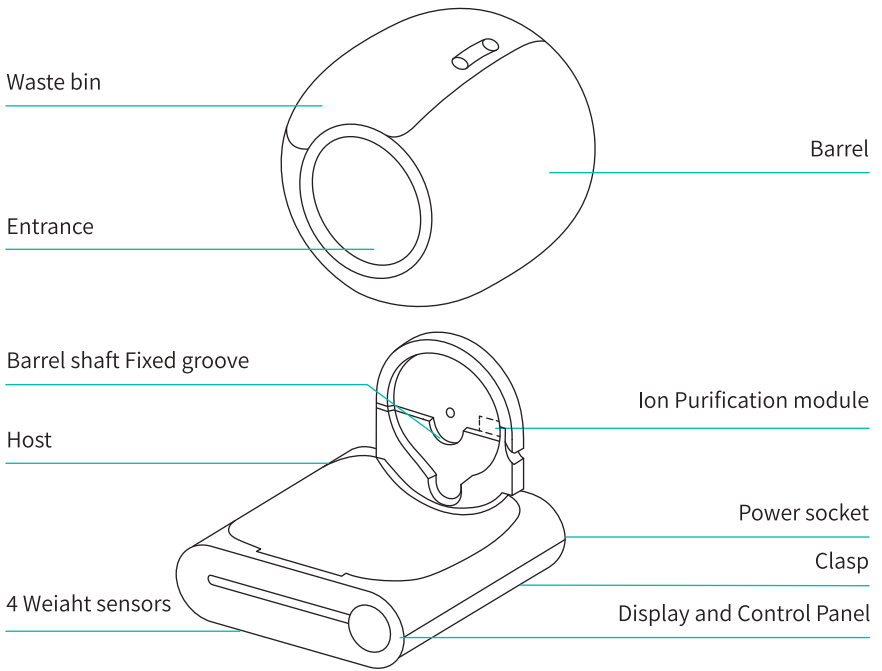


## Notice:

If the indicator of bin sign lights up,please restart the machine or click"Clean"to make it clear once.



## 3.10 Lock the keyboard:

Hold down“Auto”+“Remove Odor”for more than 2 seconds, or click the “Child Lock" on the app to enable or disable the child lock function.

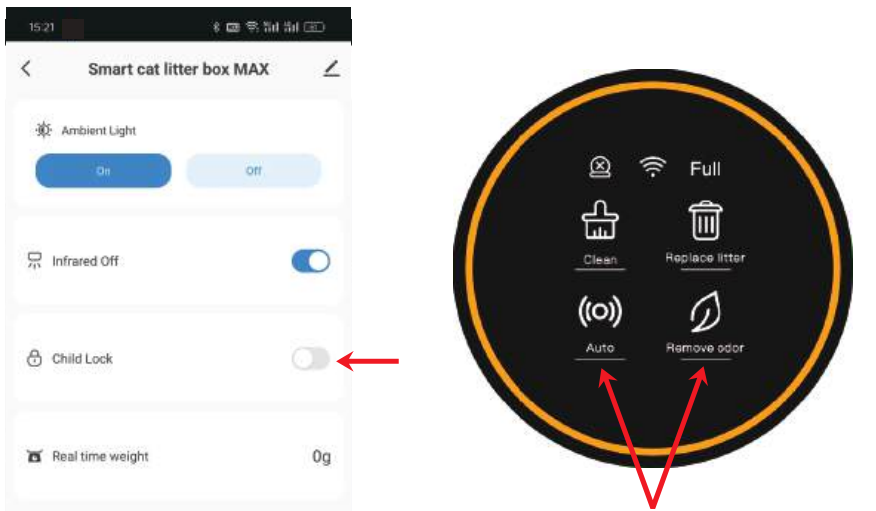


“auto”+“Remove odor”2 seconds

## 3.9 Turn off or turn on infrared sensor:

When cat litter box is places in a cage or a narrow space, please hold down “Clean”+“Replace litter”for more than 2 seconds, or click the bucket infrared sensor option in the APP to turn off or on the bucket infrared sensor to prevent the machine from always judging wrongly.

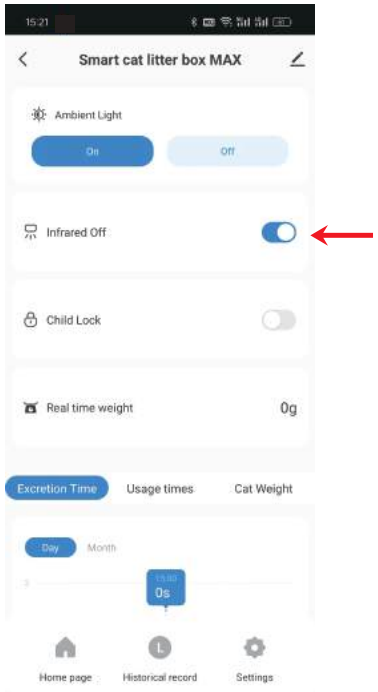


“Clean” “Replace litter”2 seconds

## 3.10 Timing:

3.10.1 sleep mode

When cat litter box is placed in the bedroom, you can set in the App "timed Do Not Disturb "to prevent the night-time activation from disturbing sleep.

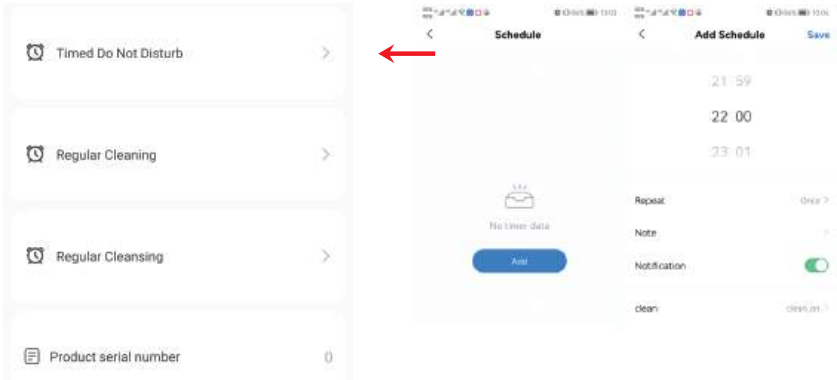


## Notice:

①During the DND period, the light on the panel will be off. Touch any button to exit the DND mode immediately.

②If the product is clearing when setting DND, the machine will enter the DND state after the cleaning is complete.

## 3.10 Timing:

3.10.2 Regular clean-up mode

Set the machine to clean regularly in the App“ Regular Cleanang”.

3.10.3 Timing net flavour

Set the machine to remove odor regularly in the App“Deodo Timing”.

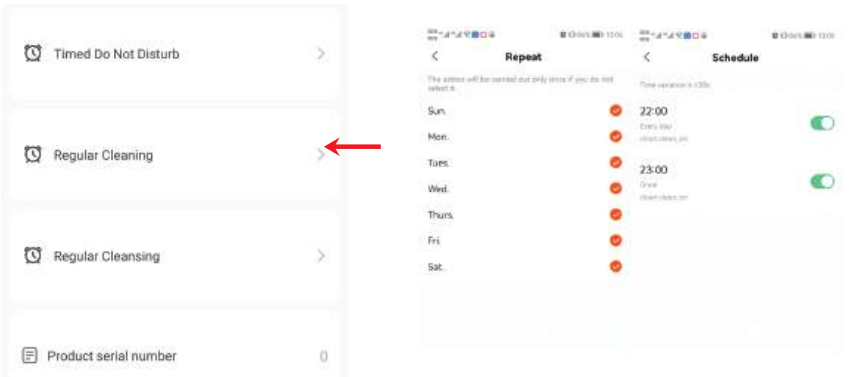


## Notice:

If the execution time of these scheduled procedures overlap with the DND time, the product will first perform odor and cleaning, and then return to DND mode.



# IV FAULT SELF-CHECK METHOD

4.1 Re-power on the product,click “Remove Odor” for more than 5 times within 2 minutes, then the product will enter the testing mode.

4.2 In testing mode:

①Click each key to check whether the key works properly.If it works properly, the PCB hardware is good.

②Press the machine from the top with a force of more than 1kg to see whether the“Full”indicator flashes.If it does, the gravity sensor is good.

③If the bin mark keeps lighting up, the motor is good.

④If the WiFi mark keeps lighting up, the WiFi hardware is good.

⑤Cover the infrared sensor at the barrel mouth,if the“Auto” mark flashes, the sensoris good.

4.3 Re-power on the machine after checking.

# V FAQ

Q:Why is the weight data only about half of that of my cats?
A: Please check whether the cat enters the machine with only two feet inside due to curiosity. Or is the machine placed on a flat ground with four feet connecting to the ground?

Q: Why is the App showing motor failure/why is the fault indicator lighted on the equipment panel/why is the equipment always self-checking?
A: If the self-check takes more than 15 minutes, the fault indicator is on. It may be that the barrel compartment is not properly installed or there is foreign matter stuck in the rotation. Please open the buckle of the barrel compartment, lift the barrel to check, and then put it back according to the tips(on the base) and close the buckle.

Q: Why is the clearing time so long?
A: Lower revs make timid cats less scared; It will prolong the whole clearing time if cats enter in or come close frequently due to curiosity.

Q: Why the machine rotates back for a while before finishing the whole rotation?
A: In order to save sand and increase the capacity of the collection bin;

Q: Why the poop can't be cleaned to the garbage box?
A: The door may be blocked by cat litter or garbage bag, or garbage too large to pass through; Please check whether the garbage entrance can be fully opened and closed smoothly(it is recommended to check every time after installing new bag). Large garbage can be handled manually to make it smaller first.



Q: What kind of cat litter sand should I use?
A:Mixed sand and tofu sand are preferred; Bentonite sand and mineral sand are okay, may affecting the delay time of “Full” prompt due to their weight density and liquidity.

Q:Why is there some sand left in the bin after I used the “Replace Litter” function?
A: Maybe there is not enough space in garbage bag, please replace the bag then “Replace Litter” again.

Q: why is the sand leaking out from the mouth of the garbage box when replacing garbage bag?
A: Please press the “Clean” for 2 seconds,then the litter bin will rotate 90° counterclockwise to ensure that the mouth of the bag is upward when replacing.

Q: Why is the weight data incorrect?
A:Please press the “Remove Odor” for 2 seconds, the sand will be smoothed and the weight will be calibrated immediately. Also please check whether the machine is placed on a flat and firm ground.Cats that do not fully enter the bin or stay in the bin for too short may also result in inaccurate weighing. If a cat enters the bin while working, it will also get an inaccurate weight.

Q: Why the machine didn't stop working while cat enters in?
A:The machine won't stop when performing sand leveling and weight calibrating. However, the safe structure of the product, together with the rotation Angle of the action(±45°) is no danger for the cat to enter in when working.

# VI PRODUCT LIST

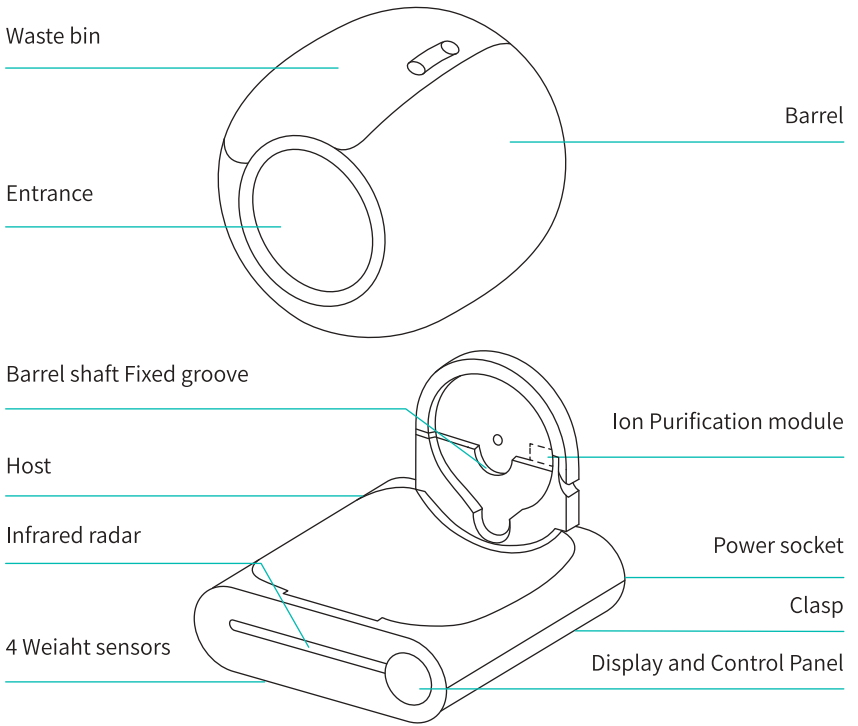




# VII INTRODUCTION OF CONTROL PANEL

| | Category | Function | Operation | Status | Prompt tone |
|---|---|---|---|---|---|
| wifi | Host Key | Clean | Click | Start cleaning immediately | one ring |
| | | Replace litter | Press for 2" | Start replacing cat litter | Long ring for 1" |
| | | Auto cleaning | Click | Start Auto cleaning | one ring |
| | | Remove odor | Click | Start purifying the air | one ring |
| | | Join network | Press for 2" | Reset WiFi to start join network | Long ring for 1 " |
| | | Leveling | Press for 2" | Leveling the cat litter | Long ring for 1" |
| | | Change garbage bag | Press for 2" | Adjust the barrel angle to the bag changing position | Long ring for 1" |
| | | Lock/Unlock | Press + for2" | Locked/Unlock | Long ring for 3" |
| | Indicator | Ring lamp | Lighting | Power On | |
| | | Fault lamp (left) | Lighting | Barrel is not installed or it cannot run | |
| | | WiFi lamp (middle) | Lighting | The device is connected | |
| | | | Flash | The device is trying to connect to the network | |
| | | | Unlit | The device is not connected | |
| | | Waste full lamp (right) | Lighting Full | Remind users to replace garbage bag when the waste bin is almost full | |

# VIII CIRCUIT DIAGRAM

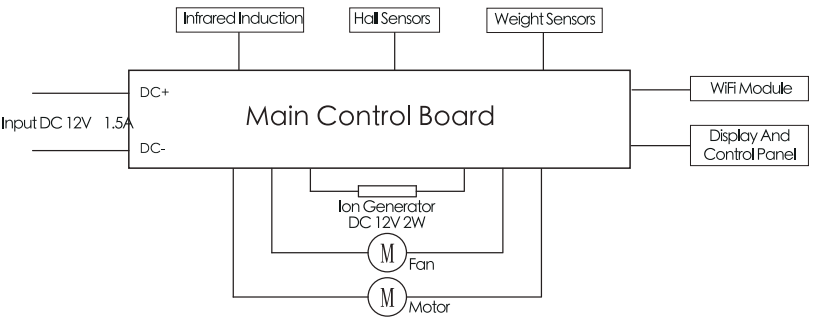

# IX Filter and Bottom tray Disassembly & Assembly

In order to facilitate users disassembly and assembly, the two accessories as shown in the picture are fixed with buckles. If they fall off during transportation, it is a normal phenomenon. Please refer to this picture, after installation, it can be used normally.

## Disassembly & Assembly of ball bin filter

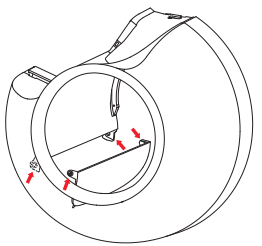

1. Disassembly & Assembly method of filter
Hold the left and right sides of the filter and align it with the shaft hole of the filter baffle, Disassembly & assembly can be completed

## Disassembly & Assembly of ball bin bottom tray

Scan the QR code to watch the disassembly & assembly video

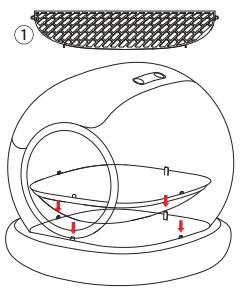


2. Disassembly of bottom tray
2.1 Remove the filter first
2.2 After aligning the front and rear anchor points, press the four anchor points into the installation slots in sequence
2.3 In order to improve the fitting area between the bottom tray and the ball bin, the edge of the bottom tray is relatively sharp Please wear gloves when disassembling



# IX PARAMETERS AND SPECIFICATIONS

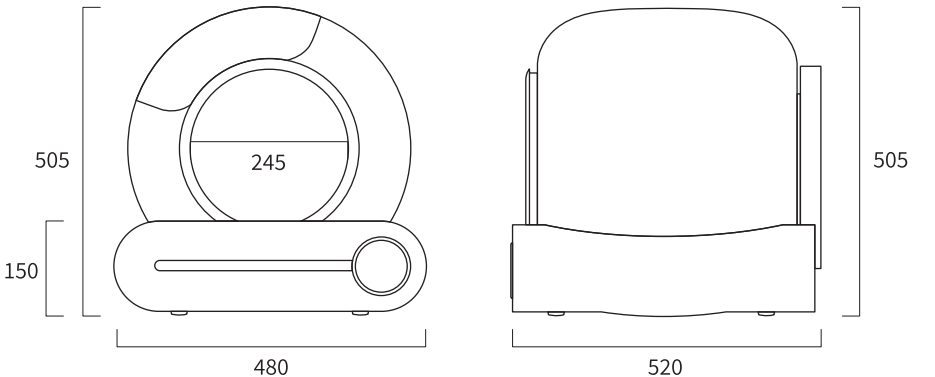


| Product Name | Product Model | Whole Machine Size |
|---|---|---|
| Smart Cat Litter Box | SCB-01 | 480(W)×520(D)×505(H)mm |
| **Rated Voltage** | **Rated Power** | **Suggested Pet Type** |
| DC12V | ≤18W | cat |

# FCC Warning

This device complies with part 15 of the FCC Rules. Operation is subject to the following two conditions: (1) This device may not cause harmful interference, and (2) this device must accept any interference received, including interference that may cause undesired operation.

Any Changes or modifications not expressly approved by the party responsible for compliance could void the user's authority to operate the equipment.

**Note:** This equipment has been tested and found to comply with the limits for a Class B digital device, pursuant to part 15 of the FCC Rules. These limits are designed to provide reasonable protection against harmful interference in a residential installation. This equipment generates uses and can radiate radio frequency energy and, if not installed and used in accordance with the instructions, may cause harmful interference to radio communications. However, there is no guarantee that interference will not occur in a particular installation. If this equipment does cause harmful interference to radio or television reception, which can be determined by turning the equipment off and on, the user is encouraged to try to correct the interference by one or more of the following measures:

-Reorient or relocate the receiving antenna.

-Increase the separation between the equipment and receiver.

-Connect the equipment into an outlet on a circuit different from that to which the receiver is connected.

-Consult the dealer or an experienced radio/TV technician for help.

*RF warning for Mobile device:

This equipment complies with FCC radiation exposure limits set forth for an uncontrolled environment. This equipment should be installed and operated with minimum distance 20cm between the radiator & your body.