CYBERLIGHT

User Manual V1.0

2020.11

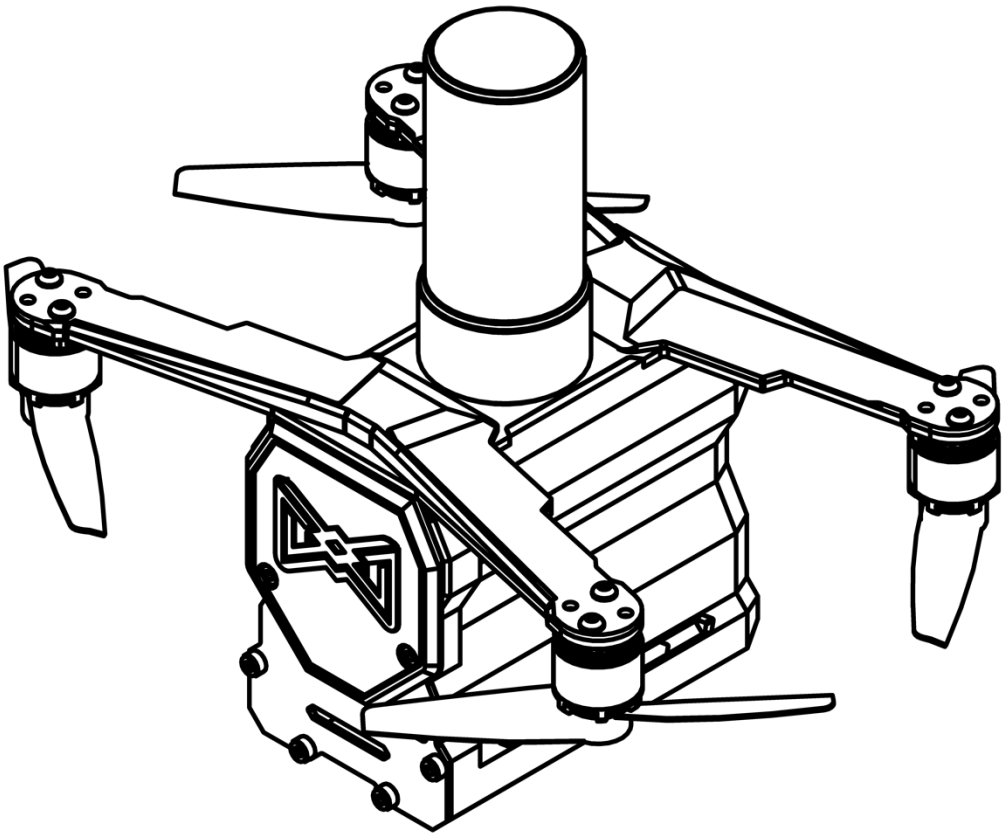

CYBER DRONE

Contents

Introduction 3

Drone diagram 4

Remote controller diagram 5

Charger diagram 6

Flight preparation 7

Flight 8

Maintenance storage and disposal 10

Specification and support 11

Introduction

The Cyberlight is a fast and extended flight time drone with high accuracy performance to ensure stability during the drone light show.

Unparalleled production

In-house drone, better throttle control, and smoother motion.

Long duration

A 20-minute drone show instead of 10 minutes.

Lightweight

285g drone obtain powerful rotors that provide the best balance of efficiency.

High stability and accuracy

Dual-frequency global navigation, high-resolution animations, and flight stability.

Brighter than ever

18 watts LED in all direction, a better LED lighting efficacy.

Drone diagram

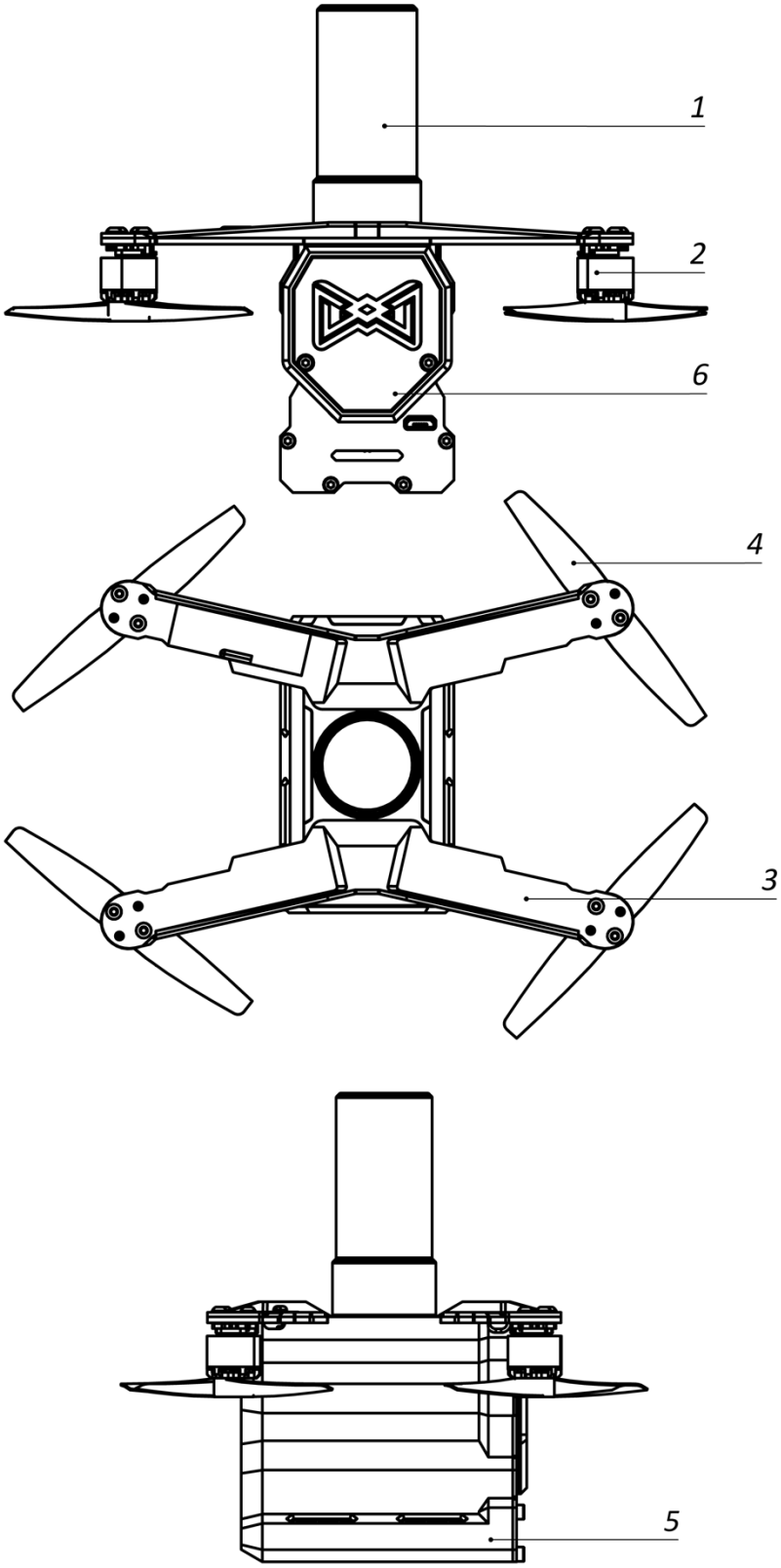

1. Navigation antenna GPS/GLONASS/GALILEO /BEIDOU
2. Motors
3. Frame
4. Propellers
5. LED lighting system
6. Battery

Remote controller diagram

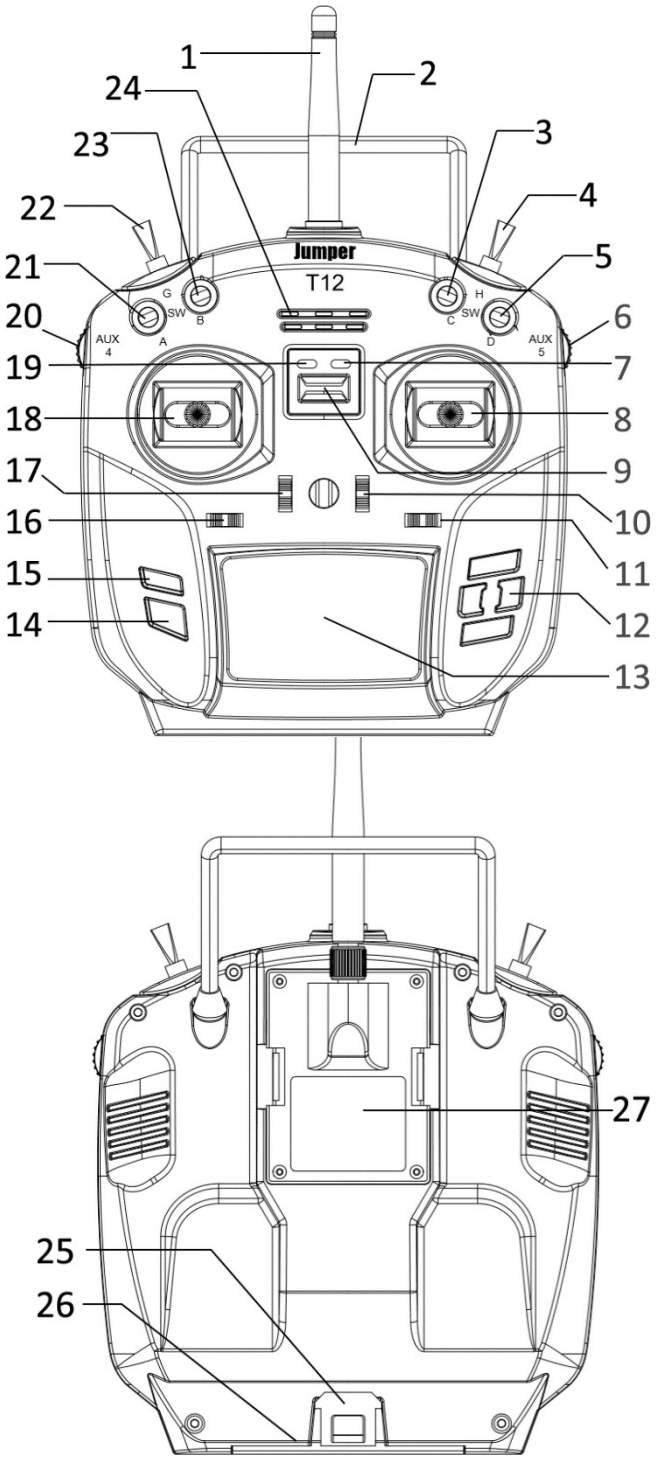

1: Antenna (if equipped with RF Module)
2: Handle
3: SWC three-segment switch
4: SWH two-segment switch
5: SWD three-segment switch
6: AUX5 knob
7: RF indicator
8: Throttle / Aileron
9: Power switch
10: Digital trim key
11: Digital trim key
12: Menu direction key
13: Display Screen
14: Exit key
15: Confirm key
16: Digital trim key
17: Digital trim key
18: Direction / Tilt Joystick
19: Power Indicator
20: AUX4 Knob
21: SWA three-segment switch
22: SWG two-segment switch
23: SWB three-segment switch
24: Loud Speaker Bay
25: Battery Bay
26: TF Memory card slot
27: JR/FrSKY Module (included with T12+JP4-in-1 combo only

Charger diagram

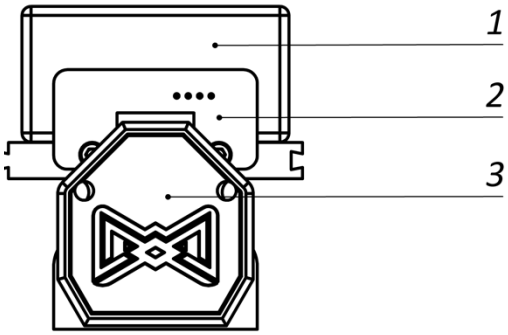

1: Charher (Input voltage: 100v-240v AC)
2: Battery Adapter
3: Battery
4: Plug
5: Power cord

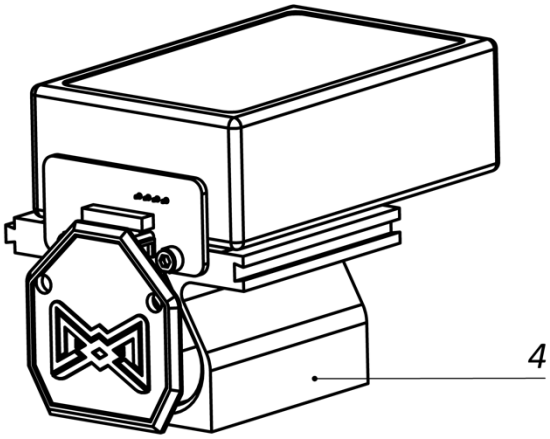

Flight preparation

- Fully charge the drone battery. Do not leave the battery connected to the charger unattended
- Insert the battery into the compartment at the bottom of the quadcopter, gently pushing the battery until bumping.
- Switch on the remote controller. Press power button and hold it down until the screen is turned on. The battery level will be shown on the upper right corner of the screen. Make sure that the battery level is sufficient to complete the flight.

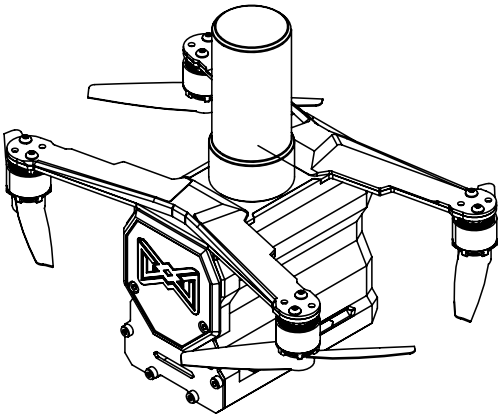

- The Cyberlight equipped with powerful motors and sharp spinning propellers. Please exercise caution when working on it and keep it in sight. Ensure power of remote controller is disconnected from the Cyberlight and remove propellers when performing maintenance.

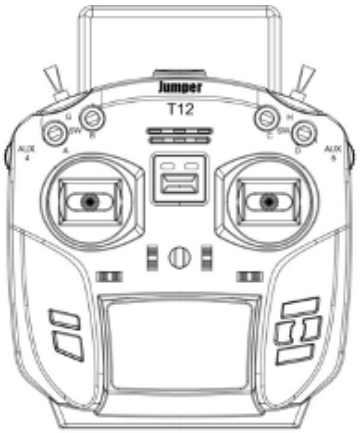

Do not operate the system under the follow conditions:

- Do not operate the remote controller radio system under the follow conditions.
- During bad weather or high wind conditions such as rain, hail, snow, storms or electromagnetic events.
- During any conditions of limited visibility.
- In areas where people, property, powerlines, roads, vehicles or animals may be in present.
- If the radio or model appear to be damaged or not functioning correctly.
- In areas of high 2.4ghz interference or in locations where use of 2.4ghz radios is prohibited.
- When the battery is the T12 or the model is too low to function.

Flight

1. **Start:** move the left throttle to the right and left, and hold it in this position until the propellers start.

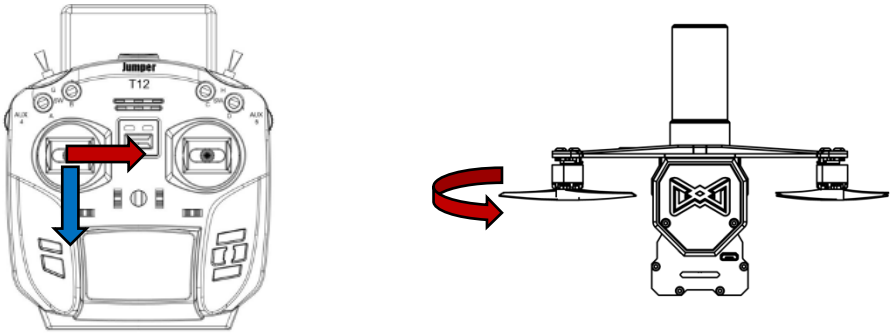

2. Perform the flight, controlling the quadcopter by sticks and mode switch.

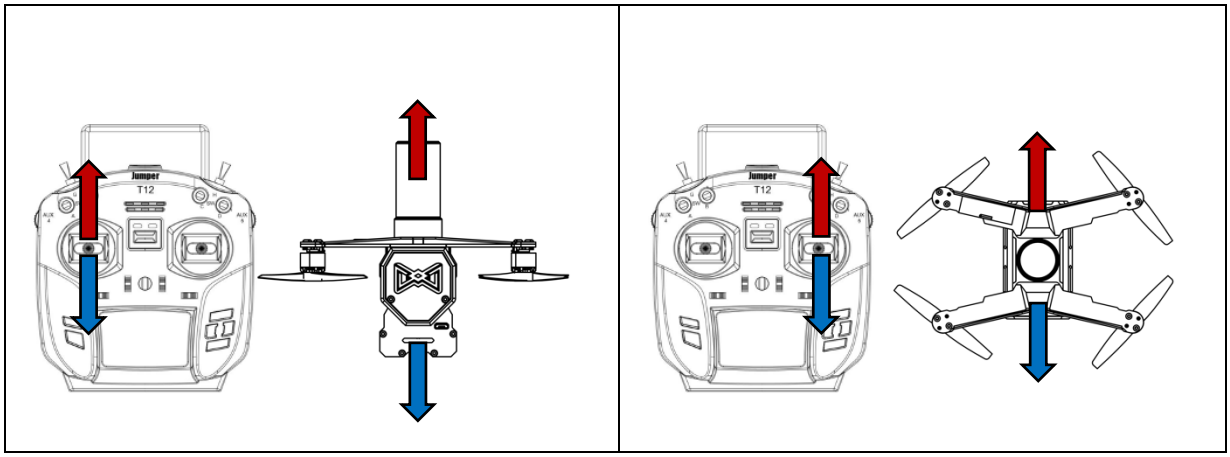

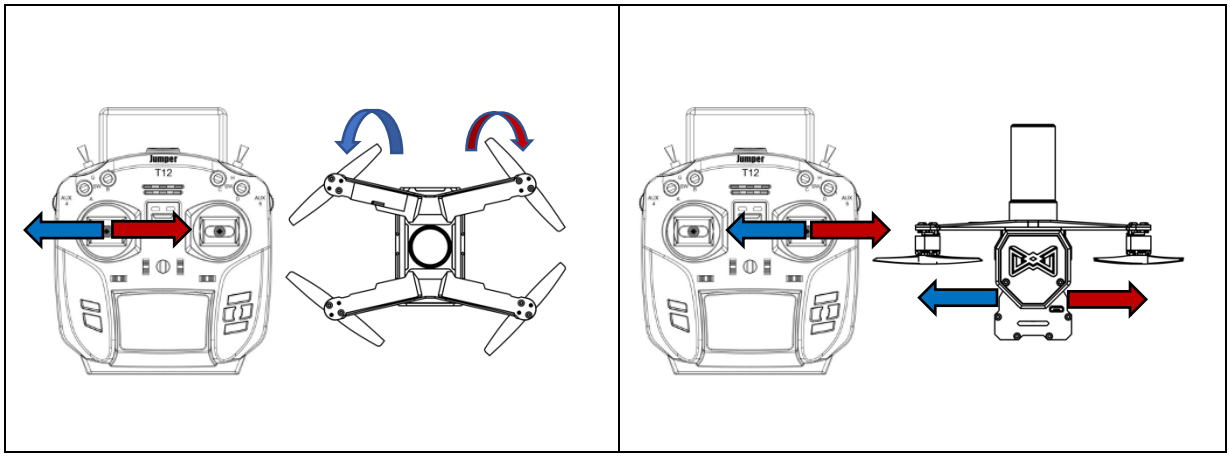

3. After landing, **stop** the propellers by moving the left throttle to the left and down, and hold it in this position until the propellers stop.

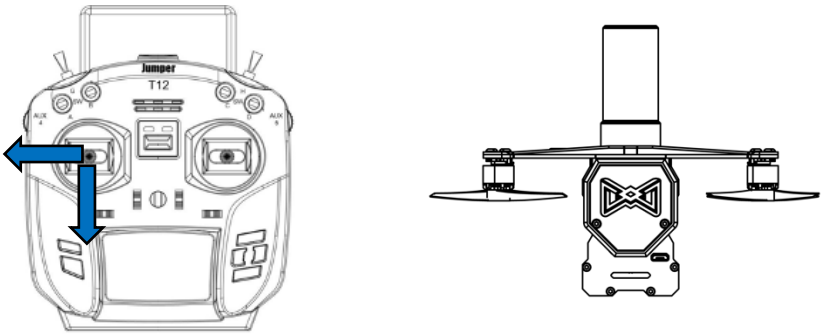

4. After completing the flight, carefully unplug the battery from the drone.

5. Switch off the remote controller. Press power button and hold it down until the remote controller unit screen has turned off.

Maintenance, storage and disposal

Drone

- Remove the battery from the drone before storage.
- Keep the drone in a dry place, away from heat sources, in a package that prevents mechanical damage.
- Keep the original packaging for convenient transportation and storage.
- The product contains electronic components and chemical power supplies. The components of the product at the end of service life should be disposed of in accordance with local legislation.

Battery and charger

- The battery must stay in the operating temperatures outlined in its data sheet
- The battery must not exceed voltage, current, and other ratings in its data sheet
- Be careful not to short-circuit
- Store batteries separately, and do not transport without proper packaging
- Never store or transport together with conductive or metallic objects particularly in a pocket or bag
- Do not keep in the sun, in a hot car, or anywhere with direct heat
- If you notice an unusual odor, rust, can deformation, damaged surface, or fluid discharge, especially on first use, discontinue use and contact our hotline
- Keep the battery away from animals and children
- If the battery is attached to a PCB, keep it away from high-static environments
- When nominal capacity after full discharge cycle is less than 80% of rated capacity, please discontinue use
- Recycle discontinued batteries according to local regulations and cover terminals with insulating tape before disposal

Specification and support

Drone

Type	Multi-rotor
Flight time	Up to 30 minutes
Takeoff weight	285g
Dimensions	100mm x 150mm x 150mm
Operating temperature	0 °C - 40 °C
Air speed	Up to 60 км/h
Flight altitude	Up to 1000 m
Engine	Electric brushless motors

Remote controller

Size	158mm x 150mm x 52mm
Weight	342g
Working voltage	DC5-DC9V (factory with 4 * AA battery box, 2s Lipo recommended, batteries not included)
Firmware	OpenTX
Channels	Up to 12 channels
Display	1.7-inch LCD display, 128* 64 resolution
Simulator mode	Potentiometer

Battery

Voltage, charge max.	12.6V
Voltage, nominal	11.1V
Voltage, discharge end	7.5V
Capacity	3000 mAh
Energy	33.3Wh

Operating temperature	0 °C - +45 °C
Storage temperature	-20 °C - +35 °C
Humidity	15% - 65%

Support

Please retain your proof of purchase and contact us.

Email: info@cyberdrone.show

FCCWarning

15.19 Labelingrequirements.

This device complies with part 15 of the FCC Rules. Operation is subject to thefollowingtwoconditions: (1)Thisdevicemaynotcauseharmfulinterference,and(2)thisdevicemust accept any interference received, including interference that may causeundesiredoperation.

15.21 Information touser.

Any Changes or modifications not expressly approved by the party responsibleforcompliance could void the user's authority to operate theequipment.

15.105 Information to theuser.

Note:ThisequipmenthasbeentestedandfoundtocomplywiththelimitsforaClassBdigital device, pursuant to part 15 of the FCC Rules. These limits are designed toprovidereasonable protection against harmful interference in a residential installation.Thisequipment generates uses and can radiate radio frequency energy and, if notinstalledand used in accordance with the instructions, may cause harmful interference toradiocommunications.However,thereisnoguaranteethatinterferencewillnotoccurinaparticular installation. If this equipment does cause harmful interference to radioortelevisionreception, whichcanbedeterminedbyturningtheequipmentoffandon, theuserisencouragedtotrytocorrecttheinterferencebyoneormoreofthefollowingmeasures:

-Reorient or relocate the receivingantenna.

-Increase the separation between the equipment andreceiver.

-Connect the equipment into an outlet on a circuit different from that to which thereceiverisconnected.

-Consult the dealer or an experienced radio/TV technician forhelp.

FCC RF Radiation ExposureStatement:

1. ThisTransmittermustnotbeco-locatedoroperatinginconjunctionwithanyotherantenna ortransmitter.
2. This equipment complies with RF radiation exposure limits set forth for an uncontrolled environment.

This equipment should be installed and operated with minimum distance 20cm between the radiator and your body.