TEST REPORT

Product Name : WiFi module
Model Number : LSD1WFC1073-01D0
FCC ID : 2BN5S-2503I

Prepared for : REOLINK TECHNOLOGY PTE. LTD.
Address : 31 KAKI BUKIT ROAD 3, #06-02, TECHLINK, SINGAPORE 417818

Prepared by : EMTEK (SHENZHEN) CO., LTD.
Address : Building 69, Majialong Industry Zone,Nanshan District, Shenzhen, Guangdong, China

Tel: (0755) 26954280
Fax: (0755) 26954282

Report Number : ENS2504210119W02002R
Date(s) of Tests : May 12, 2025 to June 27, 2025
Date of issue : June 29, 2025

1 TEST RESULT CERTIFICATION

Applicant	:	REOLINK TECHNOLOGY PTE. LTD.
Address	:	31 KAKI BUKIT ROAD 3, #06-02, TECHLINK, SINGAPORE 417818
Manufacturer	:	REOLINK TECHNOLOGY PTE. LTD.
Address	:	31 KAKI BUKIT ROAD 3, #06-02, TECHLINK, SINGAPORE 417818
EUT	:	WiFi module
Model Name	:	LSD1WFC1073-01D0
Trademark	:	N/A

Measurement Procedure Used:

APPLICABLE STANDARDS	
STANDARD	**TEST RESULT**
FCC 47 CFR Part 2, Subpart J FCC 47 CFR Part 15, Subpart E	**PASS**
IC RSS-GEN, Issue 5(04-2018)+A1(03-2019)+A2(02-2021) IC RSS-247 Issue 3(08-2023)	**PASS**

The above equipment was tested by EMTEK (SHENZHEN) CO., LTD. The test data, data evaluation, test procedures, and equipment configurations shown in this report were made in accordance with the procedures given in ANSI C63.10 (2013) and the energy emitted by the sample EUT tested as described in this report is in compliance with the requirements of FCC Rules Part 2, Part 15.407, IC RSS-247 Issue 3 and IC RSS-GEN, Issue 5.

The test results of this report relate only to the tested sample identified in this report.

Date of Test : May 12, 2025 to June 27, 2025

Prepared by : Una Yu /Editor

Reviewer : Joe Xia/Supervisor

Approve & Authorized Signer : Lisa Wang/Manager

Modified History

Version	Report No.	Revision Date	Summary
Ver.1.0	ENS2504210119W02002R	/	Original Report

TABLE OF CONTENTS

1 TEST RESULT CERTIFICATION 2

2 EUT TECHNICAL DESCRIPTION 5

3 SUMMARY OF TEST RESULT 7

4 TEST METHODOLOGY 8

4.1 GENERAL DESCRIPTION OF APPLIED STANDARDS 8
4.2 MEASUREMENT EQUIPMENT USED 8
4.3 DESCRIPTION OF TEST MODES 9

5 FACILITIES AND ACCREDITATIONS 12

5.1 FACILITIES 12
5.2 EQUIPMENT 12
5.3 LABORATORY ACCREDITATIONS AND LISTINGS 12

6 TEST SYSTEM UNCERTAINTY 13

7 SETUP OF EQUIPMENT UNDER TEST 14

7.1 RADIO FREQUENCY TEST SETUP 14
7.2 RADIO FREQUENCY TEST SETUP 14
7.3 CONDUCTED EMISSION TEST SETUP 16
7.4 BLOCK DIAGRAM CONFIGURATION OF TEST SYSTEM 17
7.5 SUPPORT EQUIPMENT 17

8 TEST REQUIREMENTS 18

8.1 BANDWIDTHMEASUREMENT 18
8.2 MAXIMUM CONDUCTED OUTPUT POWER 34
8.3 MAXIMUMPEAK POWER DENSITY 54
8.4 UNDESIRABLE RADIATED SPURIOUS EMISSION 81
8.5 POWER LINE CONDUCTED EMISSIONS 162
8.6 ANTENNA APPLICATION 163

9 APPENDIX PHOTOGRAPHS OF EUT 164

10 APPENDIX PHOTOGRAPHS OF TEST SETUP 165

2 EUT TECHNICAL DESCRIPTION

Characteristics	Description
Product:	WiFi module
Model Number:	LSD1WFC1073-01D0
Test Sample S/N:	N/A
Variant Number:	N/A
Wifi Type:	Wifi 5G with 5150MHz-5250MHz Band Wifi 5G with 5250MHz-5350MHz Band Wifi 5G with 5470MHz-5725MHz Band Wifi 5G with 5725MHz-5850MHz Band
WLAN Supported:	802.11a/n
Data Rate :	802.11a: 54/48/36/24/12/9/6Mbps 802.11n: MCS0-MCS7
Modulation:	OFDM with BPSK/QPSK/16QAM/64QAM for 802.11a/n
Frequency Range:	UNII-1: 5150MHz-5250MHz Band 5180-5240MHz for 802.11a/n(HT20)
	UNII-2A: 5250MHz-5350MHz Band 5260-5320MHz for 802.11a/n(HT20)
	UNII-2C: 5470MHz-5725MHz Band 5500-5700MHz for 802.11a/n(HT20)
	UNII-3 with 5725MHz-5850MHz Band 5745-5825MHz for 802.11a/n(HT20)
TPC Function:	Not Applicable
Antenna Port:	☒Antenna port 1
Antenna Type:	White Waterproof split Antenna & FPC Antenna (Note: The module has three types of antennas. One of them is the White Waterproof split Antenna, and the other two are FPC Antennas.)
Antenna Gain:	White Waterproof split Antenna : 2.55 dBi FPC Antenna 1: 4.60 dBi FPC Antenna 2: 4.57 dBi (Note: The antenna information is provided by the customers, which will have a certain impact on the test results.)
Power Supply:	DC 3.3V
Temperature Range:	-20° C ~ +85° C

Software Version:	N/A
Hardware Version:	N/A
Note: 1.For more details, please refer to the User's manual of the EUT.	

3 SUMMARY OF TEST RESULT

FCC PartClause	IC Part Clause	Test Parameter	Verdict	Remark
15.407 (a) 15.407 (e) 2.1049	RSS-247, 6.2 RSS-Gen 6.7	99% , 6dB and 26dB Bandwidth	PASS	
15.407 (a)	RSS-247, 6.2	Maximum Conducted Output Power	PASS	
15.407 (a)	RSS-247, 6.2	PeakPower Spectral Density	PASS	
15.407 (b) 15.209 15.205	RSS-247, 6.2 RSS-Gen 8.9 RSS-Gen 8.10 RSS-Gen 6.13	RadiatedSpurious Emission	PASS	
15.207	RSS-Gen 8.8	Power Line Conducted Emission	PASS	
15.407(a) 15.203	RSS-Gen 6.8	Antenna Application	PASS	
NOTE1:N/A (Not Applicable) NOTE2:According to FCC OET KDB 789033, the report use radiated measurements in the restricted frequency bands. In addition, the radiated test is also performed to ensure the emissions emanating from the device cabinet also comply with the applicable limits.				

RELATED SUBMITTAL(S) / GRANT(S):

This submittal(s) (test report) is intended for **FCC ID:2BN5S-2503I** filing to comply with Section 15.407 of the FCC Part 15, Subpart C Rules.

4 TEST METHODOLOGY

4.1 GENERAL DESCRIPTION OF APPLIED STANDARDS

According to its specifications, the EUT must comply with the requirements of the following standards:
FCC 47 CFR Part 2, Subpart J
FCC 47 CFR Part 15, Subpart E
IC RSS-GEN, Issue 5(04-2018)+A1(03-2019)+A2(02-2021)
IC RSS-247 Issue 3(08-2023)
FCC KDB 662911 D01 Multiple Transmitter Output v02r01
FCC KDB 789033 D2 General UNII Test Procedures New Rules v02r01

4.2 MEASUREMENT EQUIPMENT USED

Conducted Emission Test Equipment

Equipment	Manufacturer	Model No.	Serial No.	Last Cal.	Cal. Interval
EMI Test Receiver	Rohde & Schwarz	ESCI	101384	2025/5/9	1Year
AMN	Rohde & Schwarz	ENV216	101161	2025/5/9	1Year

For Spurious Emissions Test

Equipment	Manufacturer	Model No.	Serial No.	Last Cal.	Cal. Interval
EMI Test Receiver	Rohde & Schwarz	ESU 26	100154	2025/5/9	1Year
Pre-Amplifie	Lunar EM	LNA30M3G-25	J10100000070	2025/5/9	1Year
Bilog Antenna	Schwarzbeck	VULB9163	661	2025/5/18	2 Year
Horn antenna	Schwarzbeck	BBHA9120D	9120D-1177	2025/5/17	2 Year
Pre-Amplifie	SKET	LNPA_0118G-45	SK2019051801	2025/5/9	1Year
Loop Antenna	Schwarzbeck	FMZB1519	1519-012	2025/5/13	2 Year
Spectrum Analyzer	Rohde & Schwarz	FSV40	100967	2025/5/9	1Year
Horn antenna	Schwarzbeck	BBHA9170	9170-399	2025/5/13	2 Year
Coaxial Cable	TIMES	NmNm-7-C15702	N/A	2025/5/9	1Year
Coaxial Cable	TIMES	HF290-NMSM-6.5M	N/A	2025/5/9	1Year
Coaxial Cable	TIMES	LMR-240 N-N	N/A	2025/5/9	1Year

For other test items:

Equipment	Manufacturer	Model No.	Serial No.	Last Cal.	Cal. Interval
Signal Analyzer	Agilent	N9010A	MY53470879	2025/5/10	1Year
Vector Signal Generater	Agilent	N5182B	MY53050878	2025/5/10	1Year
Analog Signal Generator	Agilent	N5171B	MY53050553	2025/5/10	1Year
RF Control Unit(Power Meter)	Tonscend	JS0806-2	\	2025/5/10	1Year
Temperature&Humidity Chamber	ESPEC	EL-02KA	12107166	2025/5/10	1Year

4.3 DESCRIPTION OF TEST MODES

The EUT has been tested under its typical operating condition.
The EUT configuration for testing is installed on RF field strength measurement to meet the Commissions requirement and operating in a manner which intends to maximize its emission characteristics in a continuous normal application.
The Transmitter was operated in the normal operating mode. The TX frequency was fixed which was for the purpose of the measurements.
Test of channel included the lowest and middle and highest frequency to perform the test, then record on this report.
Those data rates (802.11a: 54 Mbps; 802.11n(HT20): MCS0; 802.11ac(VHT20): MCS0; 802.11n(HT40): MCS0; 802.11ac(VHT40): MCS0;802.11ac(VHT80): MCS0;)were used for all test.

Pre-defined engineering program for regulatory testing used to control the EUT for staying in continuous transmitting and receiving mode is programmed.

☒Wifi 5G with U-NII - 1
Frequency and Channel list for 802.11a, 802.11n (HT20):

Channel	Frequency (MHz)	Channel	Frequency (MHz)	Channel	Frequency (MHz)
36	5180	44	5220		
40	5200	48	5240		

Test Frequency and Channel for 802.11a, 802.11n (HT20):

Lowest Frequency		Middle Frequency		Highest Frequency	
Channel	Frequency (MHz)	Channel	Frequency (MHz)	Channel	Frequency (MHz)
36	5180	40	5200	48	5240

☒ Wifi 5G with U-NII -2A

Frequency and Channel list 802.11a, 802.11n (HT20):

Channel	Frequency (MHz)	Channel	Frequency (MHz)	Channel	Frequency (MHz)
52	5260	60	5300		
56	5280	64	5320		

Test Frequency and Channel for 802.11a, 802.11n (HT20):

Lowest Frequency		Middle Frequency		Highest Frequency	
Channel	Frequency (MHz)	Channel	Frequency (MHz)	Channel	Frequency (MHz)
52	5260	56	5280	64	5320

☒ Wifi 5G with U-NII -2C

Frequency and Channel list for 802.11a, 802.11n (HT20):

Channel	Frequency (MHz)	Channel	Frequency (MHz)	Channel	Frequency (MHz)
100	5500	116	5580	132	5660
104	5520	120	5600	136	5680
108	5540	124	5620	140	5700
112	5560	128	5640		

Test Frequency and Channel for 802.11a, 802.11n (HT20):

Lowest Frequency		Middle Frequency		Highest Frequency	
Channel	Frequency (MHz)	Channel	Frequency (MHz)	Channel	Frequency (MHz)
100	5500	116	5580	140	5700

☒ Wifi 5G with U-NII -3

Frequency and Channel list for 802.11a, 802.11n (HT20):

Channel	Frequency (MHz)	Channel	Frequency (MHz)	Channel	Frequency (MHz)
149	5745	157	5785	165	5825
153	5765	161	5805		

Test Frequency and Channel for 802.11a, 802.11n (HT20):

Lowest Frequency		Middle Frequency		Highest Frequency	
Channel	Frequency (MHz)	Channel	Frequency (MHz)	Channel	Frequency (MHz)
149	5745	157	5785	165	5825

Multi-antenna correlation:

☑	Transmit Signals are Correlated
	Directional gain = 10 log[($10^{G1/20}$ + $10^{G2/20}$ + … + $10^{GN/20}$)2 /N_{ANT}] dBi
☐	All Transmit Signals are Completely Uncorrelated
	Directional gain = 10 log[($10^{G1/10}$ + $10^{G2/10}$ + … + $10^{GN/10}$)/N_{ANT}] dBi

Directional gain = 10 log [($10^{1.68/20}$ + $10^{1.86/20}$)^2/2] dBi=/ dBi

5 FACILITIES AND ACCREDITATIONS

5.1 FACILITIES

All measurement facilities used to collect the measurement data are located at:

EMTEK (Shenzhen) Co., Ltd.
Building 69, Majialong Industry Zone District, Nanshan District, Shenzhen, China
The sites are constructed in conformance with the requirements of ANSI C63.7, ANSI C63.4 and CISPR Publication 22.

5.2 EQUIPMENT

Radiated emissions are measured with one or more of the following types of linearly polarized antennas: tuned dipole, biconical, log periodic, bi-log, and/or ridged waveguide, horn. Spectrum analyzers with preselectors and quasi-peak detectors are used to perform radiated measurements.

Conducted emissions are measured with Line Impedance Stabilization Networks and EMI Test Receivers.

Calibrated wideband preamplifiers, coaxial cables, and coaxial attenuators are also used for making measurements.

All receiving equipment conforms to CISPR Publication 16-1, “Radio Interference Measuring Apparatus and Measurement Methods.”

5.3 LABORATORY ACCREDITATIONS AND LISTINGS

Site Description
EMC Lab. : **Accredited by CNAS**
The Certificate Registration Number is L2291
The Laboratory has been assessed and proved to be in compliance with CNAS-CL01 (identical to ISO/IEC 17025:2017)

Accredited by FCC
Designation Number: CN1204
Test Firm Registration Number: 882943

Accredited by A2LA
The Certificate Number is 4321.01

Accredited by Industry Canada
The Conformity Assessment Body Identifier is CN0008

Name of Firm : EMTEK (SHENZHEN) CO., LTD.
Site Location : Building 69, Majialong Industry Zone, Nanshan District, Shenzhen, Guangdong, China

6 TEST SYSTEM UNCERTAINTY

The following measurement uncertainty levels have been estimated for tests performed on the apparatus:

Test Parameter	Measurement Uncertainty
Frequency error	±20Hz
Occupied Bandwidth	±0.5KHz
Transmitter output power	±0.6dB
Conducted spurious emissions	±3.2dB
Radiated spurious emissions	±4.5dB
Temperature	±1.2℃
Humidity	±3%
DC voltages	±0.25V
Time	±1%

Measurement Uncertainty for a level of Confidence of 95%

7 SETUP OF EQUIPMENT UNDER TEST

7.1 RADIO FREQUENCY TEST SETUP

The WLAN component's antenna ports(s) of the EUT are connected to the measurement instrument per an appropriate attenuator. The EUT is controlled by PC/software to emit the specified signals for the purpose of measurements.

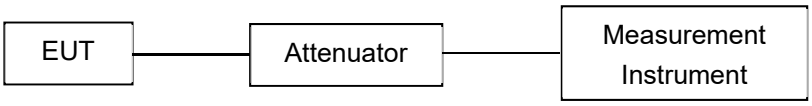

7.2 RADIO FREQUENCY TEST SETUP

The test site semi-anechoic chamber has met the requirement of NSA tolerance 4 dB according to the standards: ANSI C63.10. The test distance is 3m.The setup is according to the requirements in Section 13.1.4.1 of ANSI C63.10-2013and CAN/CSA-CEI/IEC CISPR 22.

Below 30MHz：
The EUT is placed on a turntable 0.8 meters above the ground in the chamber, 3 meter away from the antenna (loop antenna). The Antenna should be positioned with its plane vertical at the specified distance from the EUT and rotated about its vertical axis for maximum response at each azimuth about the EUT. The center of the loop shall be 1 m above the ground. For certain applications, the loop antenna plane may also need to be positioned horizontally at the specified distance from the EUT.

Above 30MHz：
The EUT is placed on a turntable 0.8 meters above the ground in the chamber, 3 meter away from the antenna. The maximal emission value is acquired by adjusting the antenna height, polarisation and turntable azimuth. Normally, the height range of antenna is 1 m to 4 m, the azimuth range of turntable is 0° to 360°, and the receive antenna has two polarizations Vertical (V) and Horizontal (H).

Above 1GHz：
(Note: the FCC's permission to use 1.5m as an alternative per TCBC Conf call of Dec. 2, 2014.)
The EUT is placed on a turntable 1.5 meters above the ground in the chamber, 3 meter away from the antenna. The maximal emission value is acquired by adjusting the antenna height, polarisation and turntable azimuth. Normally, the height range of antenna is 1 m to 4 m, the azimuth range of turntable is 0° to 360°, and the receive antenna has two polarizations Vertical (V) and Horizontal (H).

(a) Radiated Emission Test Set-Up, Frequency Below 30MHz

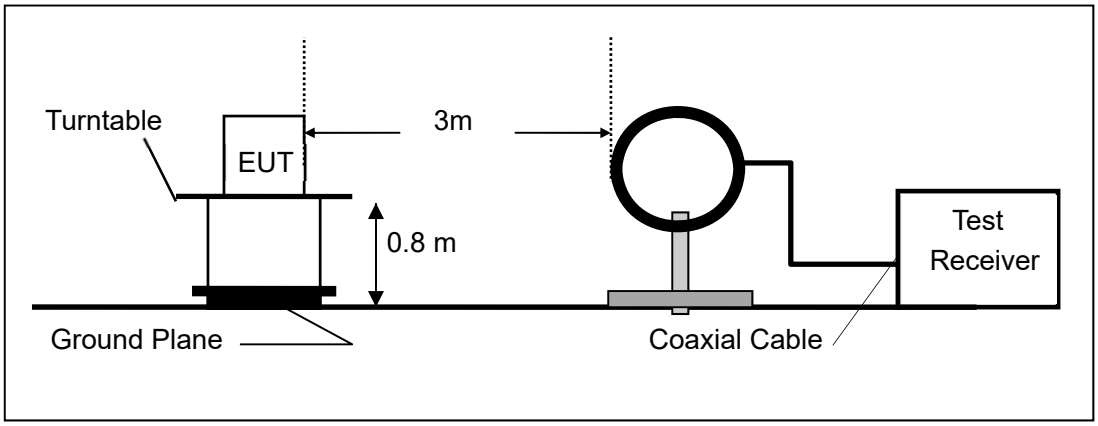

(b)Radiated Emission Test Set-Up, Frequency Below 1000MHz

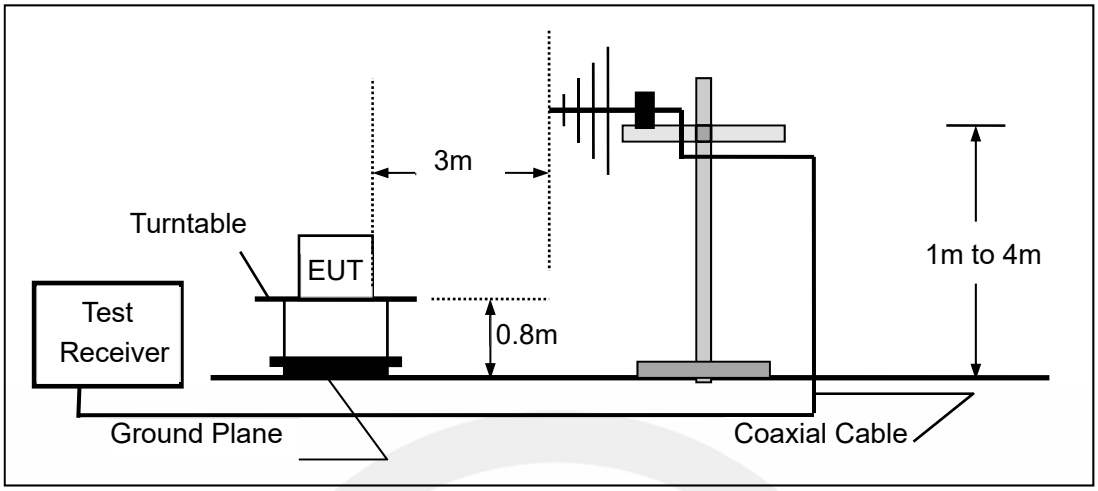

(c) Radiated Emission Test Set-Up, Frequency above 1000MHz

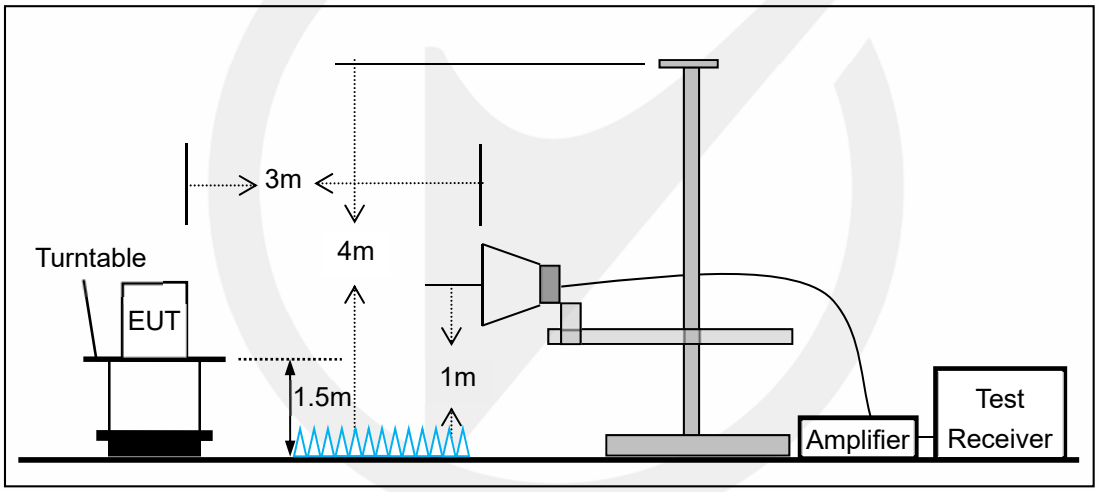

7.3 CONDUCTED EMISSION TEST SETUP

The mains cable of the EUT (maybe per AC/DC Adapter) must be connected to LISN. The LISN shall be placed 0.8 m from the boundary of EUT and bonded to a ground reference plane for LISN mounted on top of the ground reference plane. This distance is between the closest points of the LISN and the EUT. All other units of the EUT and associated equipment shall be at least 0.8m from the LISN.

Ground connections, where required for safety purposes, shall be connected to the reference ground point of the LISN and, where not otherwise provided or specified by the manufacturer, shall be of same length as the mains cable and run parallel to the mains connection at a separation distance of not more than 0.1 m.

According to the requirements in Section 13.1.4.1 of ANSI C63.10-2013 Conducted emissions from the EUT measured in the frequency range between 0.15 MHz and 30 MHz using CISPR Quasi-Peak and average detector mode.

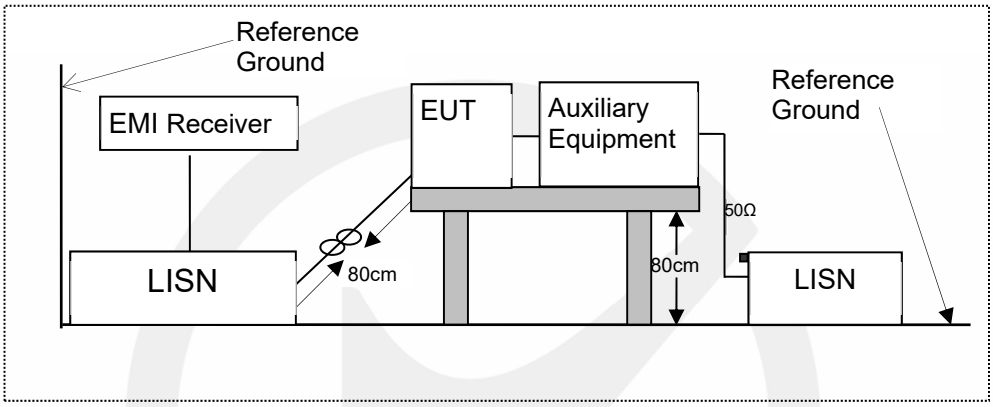

7.4 BLOCK DIAGRAM CONFIGURATION OF TEST SYSTEM

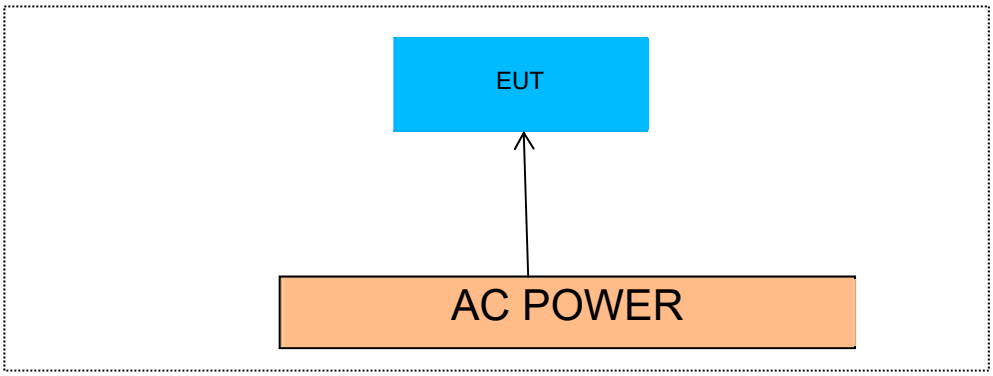

7.5 SUPPORT EQUIPMENT

EUT Cable List and Details			
Cable Description	Length (m)	Shielded/Unshielded	With / Without Ferrite
/	/	/	/

Auxiliary Cable List and Details			
Cable Description	Length (m)	Shielded/Unshielded	With / Without Ferrite
/	/	/	/

Auxiliary Equipment List and Details			
Description	Manufacturer	Model	Serial Number
/	/	/	/

Notes:

1. All the equipment/cables were placed in the worst-case configuration to maximize the emission during the test.

2. Grounding was established in accordance with the manufacturer's requirements and conditions for the intended use.

8 TEST REQUIREMENTS

8.1 BANDWIDTHMEASUREMENT

8.1.1 Applicable Standard

According to FCC Part 15.407(a)(1) for UNIIBand I
According to FCC Part 15.407(a)(2) for UNIIBand II-A and UNIIBand II-C
According to FCC Part 15.407(a)(3) for UNIIBand III
According toFCC Part 15.407(e) for UNIIBand III
According to 789033 D02 SectionII(C)
According to 789033 D02 SectionII(D)
According to RSS-Gen6.6, RSS 247, 6.2

8.1.2 Conformance Limit

The 26dB bandwidth is used to determine the conducted power limits.
Within the 5.725-5.85 GHz band, the minimum 6 dB bandwidth of U-NII devices shall be at least 500 kHz.

8.1.3 Test Configuration

Test according to clause 7.1 radio frequency test setup

8.1.4 Test Procedure

According to 789033 D02 v02r01 section C&D, the following is the measurement procedure.

1. Emission Bandwidth (EBW)
a) Set RBW = approximately 1% of the emission bandwidth.
b) Set the VBW > RBW.
c) Detector = Peak.
d) Trace mode = max hold.
e) Measure the maximum width of the emission that is 26 dB down from the maximum of the emission. Compare this with the RBW setting of the analyzer. Readjust RBW and repeat measurement as needed until the RBW/EBW ratio is approximately 1%.

2. Minimum Emission Bandwidth for the band 5.725-5.85 GHz
Section 15.407(e) specifies the minimum 6 dB emission bandwidth of at least 500 KHz for the band 5.715-5.85 GHz. The following procedure shall be used for measuring this bandwidth:
a) Set RBW = 100 kHz.
b) Set the video bandwidth (VBW) ⩾ 3 × RBW.
c) Detector = Peak.
d) Trace mode = max hold.
e) Sweep = auto couple.
f) Allow the trace to stabilize.
g) Measure the maximum width of the emission that is constrained by the frequencies associated with the two outermost amplitude points (upper and lower frequencies) that are attenuated by 6 dB relative to the maximum level measured in the fundamental emission.
Note: The automatic bandwidth measurement capability of a spectrum analyzer or EMI receiver may be employed if it implements the functionality described above.

D. 99 Percent Occupied Bandwidth
The 99-percent occupied bandwidth is the frequency bandwidth such that, below its lower and above its upper frequency limits, the mean powers are each equal to 0.5 % of the total mean power of the given emission. Measurement of the 99-percent occupied bandwidth is required only as a condition for using the optional band-edge measurement techniques described in section II.G.3.d). Measurements of 99-percent occupied bandwidth may also optionally be used in lieu of the EBW to 789033 D02 v01r02 General UNII Test Procedures New Rules v01 define the minimum frequency range over which the spectrum is integrated when measuring maximum conducted output power as described in section II.E.

However, the EBW must be measured to determine bandwidth dependent limits on maximum conducted output power in accordance with 15.407(a).

The following procedure shall be used for measuring (99 %) power bandwidth:
1. Set center frequency to the nominal EUT channel center frequency.
2. Set span = 1.5 times to 5.0 times the OBW.
3. Set RBW = 1 % to 5 % of the OBW
4. Set VBW ≥ 3 • RBW
5. Video averaging is not permitted. Where practical, a sample detection and single sweep mode shall be used. Otherwise, peak detection and max hold mode (until the trace stabilizes) shall be used.
6. Use the 99 % power bandwidth function of the instrument (if available).
7. If the instrument does not have a 99 % power bandwidth function, the trace data points are recovered and directly summed in power units. The recovered amplitude data points, beginning at the lowest frequency, are placed in a running sum until 0.5 % of the total is reached; that frequency is recorded as the lower frequency. The process is repeated until 99.5 % of the total is reached; that frequency is recorded as the upper frequency. The 99% occupied bandwidth is the difference between these two frequencies.

8.1.5 Test Results

Temperature:	25˚C
Relative Humidity:	45%
ATM Pressure:	1011 mbar

Note: N/A

Emission Bandwidth

TestMode	Antenna	Frequency[MHz]	26db EBW [MHz]	FL[MHz]	FH[MHz]	Limit[MHz]	Verdict
11A	Ant1	5180	31.640	5164.720	5196.360	---	---
11A	Ant1	5200	32.440	5183.960	5216.400	---	---
11A	Ant1	5240	32.000	5223.680	5255.680	---	---
11A	Ant1	5260	32.560	5243.680	5276.240	---	---
11A	Ant1	5280	32.320	5263.280	5295.600	---	---
11A	Ant1	5320	32.240	5304.000	5336.240	---	---
11A	Ant1	5500	31.560	5483.720	5515.280	---	---
11A	Ant1	5580	31.400	5564.280	5595.680	---	---
11A	Ant1	5700	29.960	5685.880	5715.840	---	---
11A	Ant1	5745	27.120	5730.480	5757.600	---	---
11A	Ant1	5785	27.520	5770.520	5798.040	---	---
11A	Ant1	5825	22.240	5814.080	5836.320	---	---
11N20SISO	Ant1	5180	30.280	5165.480	5195.760	---	---
11N20SISO	Ant1	5200	31.080	5183.760	5214.840	---	---
11N20SISO	Ant1	5240	30.920	5224.960	5255.880	---	---
11N20SISO	Ant1	5260	31.160	5245.080	5276.240	---	---
11N20SISO	Ant1	5280	29.440	5265.360	5294.800	---	---
11N20SISO	Ant1	5320	30.400	5304.480	5334.880	---	---
11N20SISO	Ant1	5500	29.560	5484.240	5513.800	---	---
11N20SISO	Ant1	5580	31.120	5565.000	5596.120	---	---
11N20SISO	Ant1	5700	29.200	5685.680	5714.880	---	---
11N20SISO	Ant1	5745	25.920	5732.360	5758.280	---	---
11N20SISO	Ant1	5785	29.960	5769.840	5799.800	---	---
11N20SISO	Ant1	5825	22.480	5814.000	5836.480	---	---

11A-Ant1-5180

11A-Ant1-5200

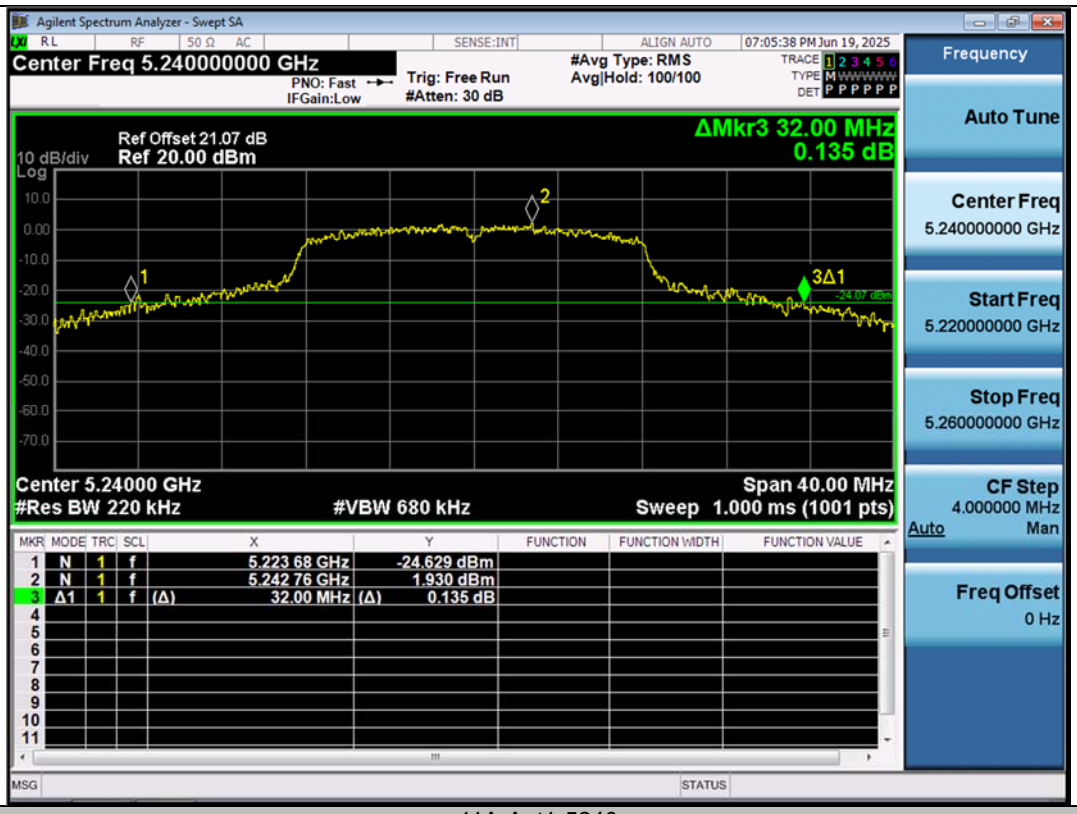

11A-Ant1-5240

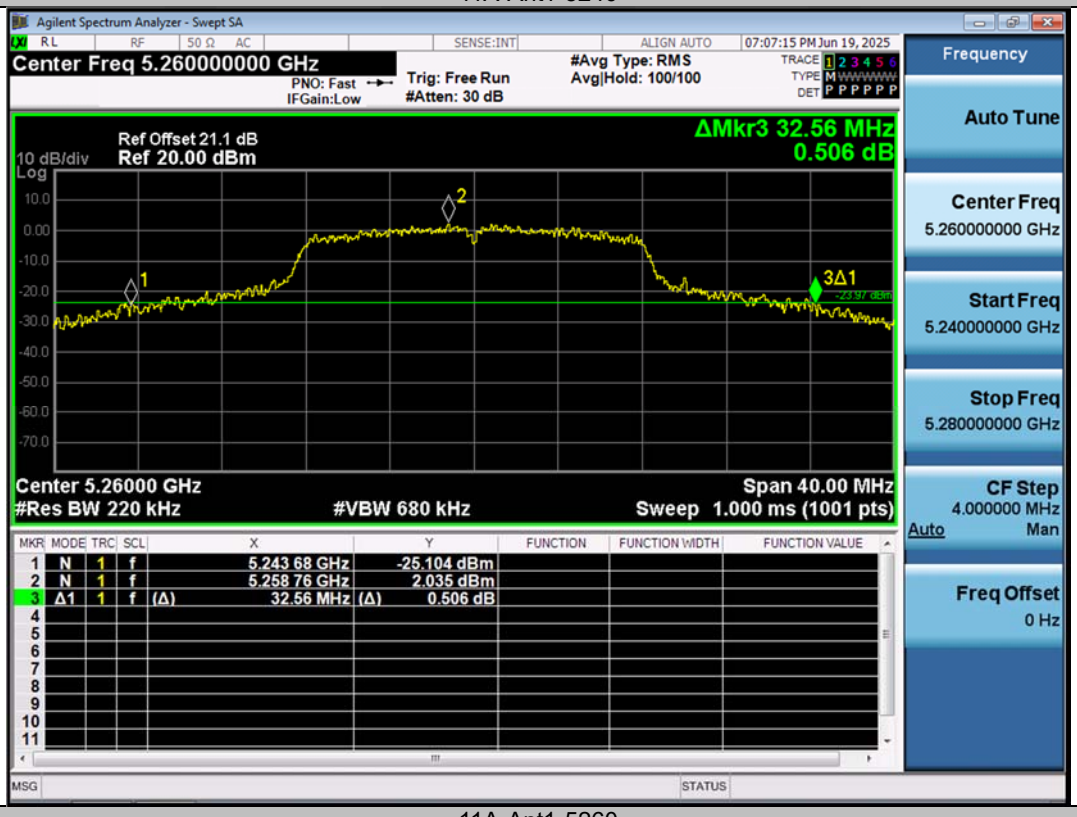

11A-Ant1-5260

11A-Ant1-5280

11A-Ant1-5320

11A-Ant1-5500

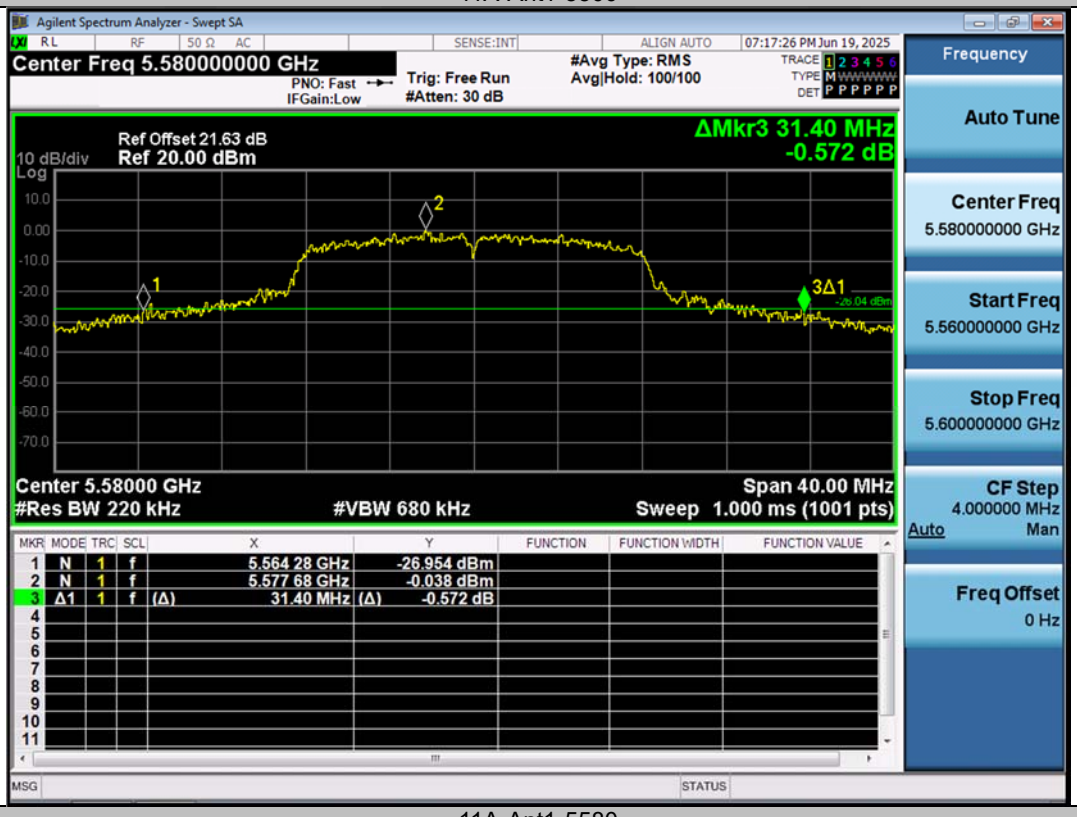

11A-Ant1-5580

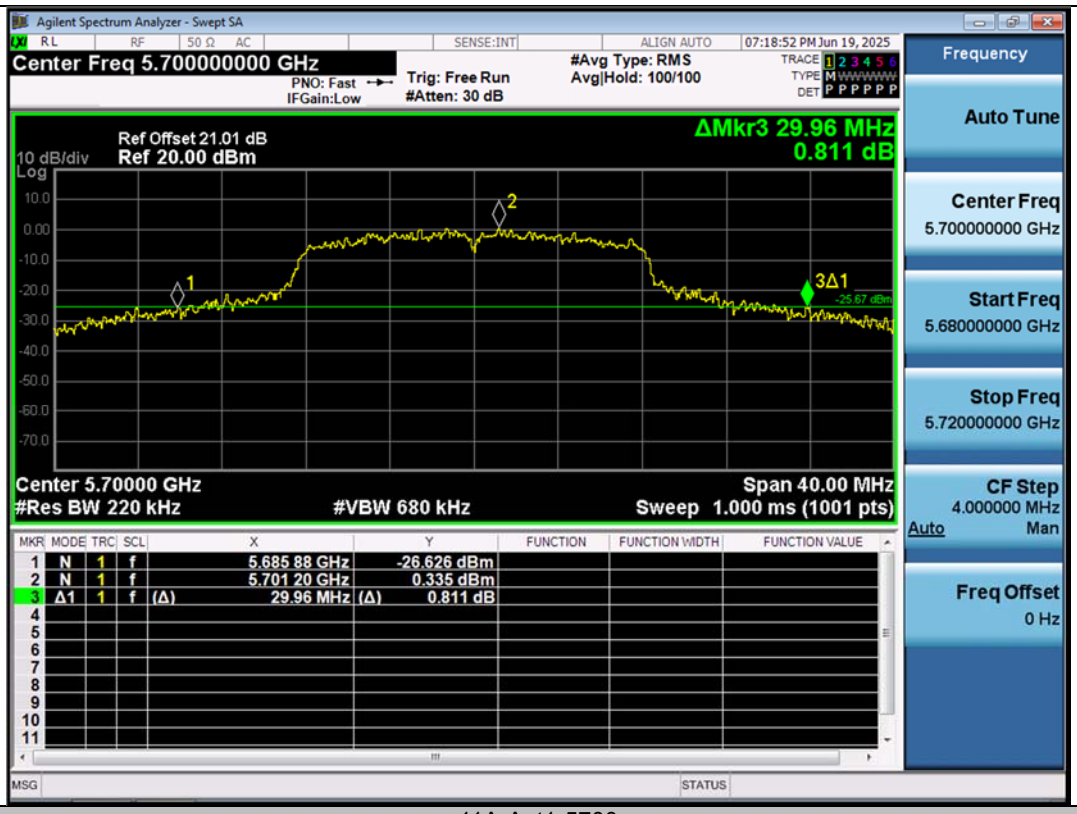

11A-Ant1-5700

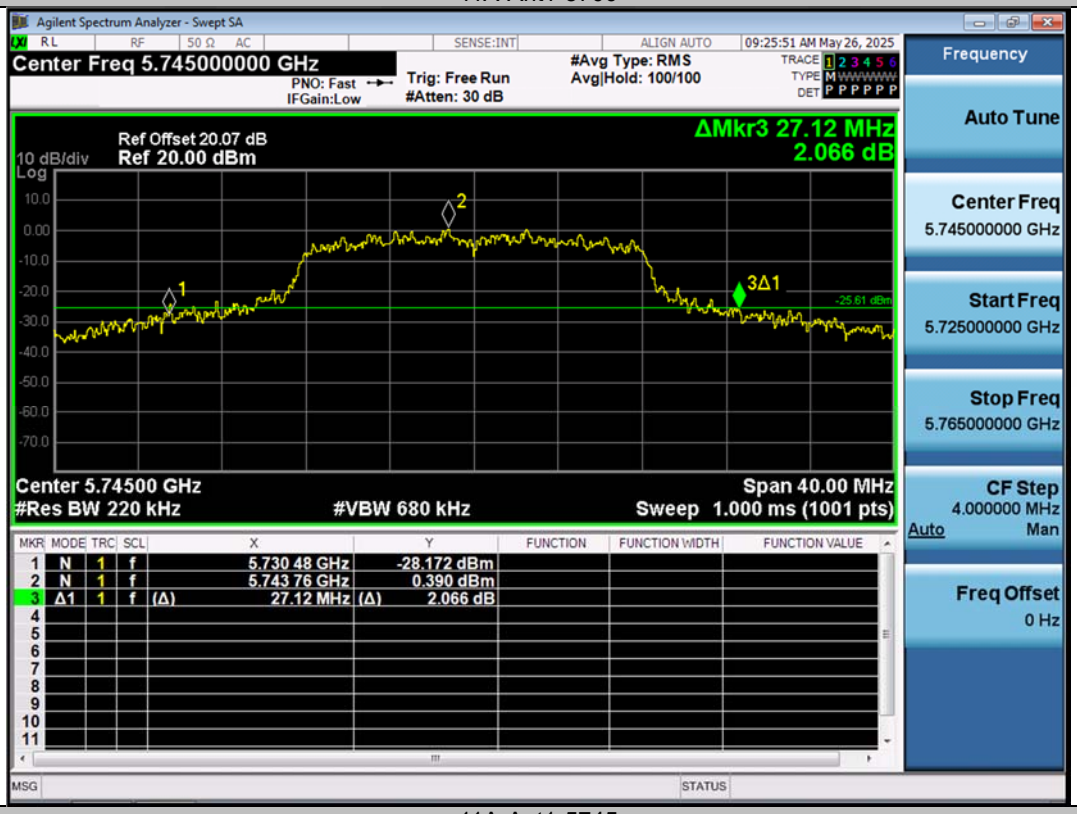

11A-Ant1-5745

11A-Ant1-5785

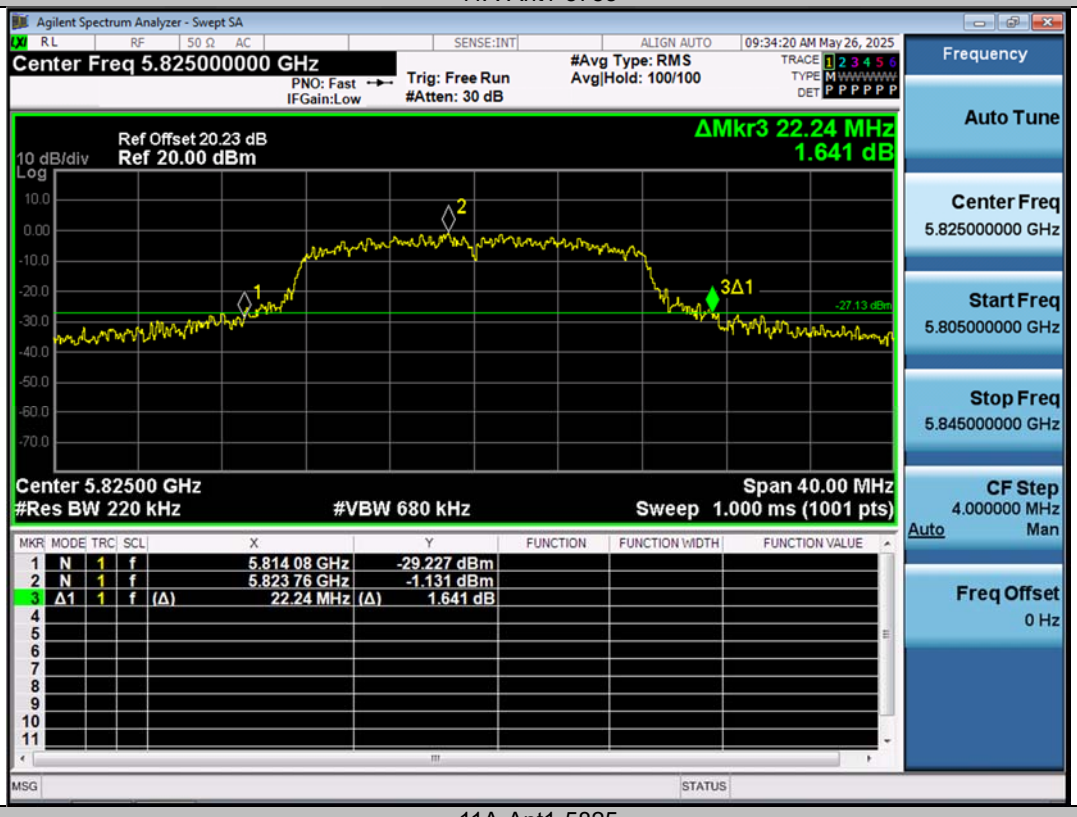

11A-Ant1-5825

11N20SISO-Ant1-5180

11N20SISO-Ant1-5200

11N20SISO-Ant1-5240

11N20SISO-Ant1-5260

11N20SISO-Ant1-5280

11N20SISO-Ant1-5320

11N20SISO-Ant1-5500

11N20SISO-Ant1-5580

11N20SISO-Ant1-5700

11N20SISO-Ant1-5745

11N20SISO-Ant1-5785

11N20SISO-Ant1-5825

Occupied channel bandwidth

TestMode	Antenna	Frequency[MHz]	OCB [MHz]	FL[MHz]	FH[MHz]	Limit[MHz]	Verdict
11A	Ant1	5180	20.127	5170.2067	5190.3337	---	---
11A	Ant1	5200	18.923	5190.6895	5209.6125	---	---
11A	Ant1	5240	18.838	5230.7758	5249.6138	---	---
11A	Ant1	5260	18.837	5250.8531	5269.6901	---	---
11A	Ant1	5280	18.705	5270.7524	5289.4574	---	---
11A	Ant1	5320	18.738	5310.7433	5329.4813	---	---
11A	Ant1	5500	18.749	5490.3582	5509.1072	---	---
11A	Ant1	5580	18.433	5570.7244	5589.1574	---	---
11A	Ant1	5700	18.343	5691.0819	5709.4249	---	---
11A	Ant1	5745	17.815	5736.2145	5754.0295	---	---
11A	Ant1	5785	18.589	5775.7459	5794.3349	---	---
11A	Ant1	5825	17.090	5816.4711	5833.5611	---	---
11N20SISO	Ant1	5180	19.226	5170.5533	5189.7793	---	---
11N20SISO	Ant1	5200	19.370	5190.4153	5209.7853	---	---
11N20SISO	Ant1	5240	19.223	5230.3902	5249.6132	---	---
11N20SISO	Ant1	5260	19.284	5250.3635	5269.6475	---	---
11N20SISO	Ant1	5280	19.184	5270.4508	5289.6348	---	---
11N20SISO	Ant1	5320	19.422	5310.3041	5329.7261	---	---
11N20SISO	Ant1	5500	19.268	5490.0674	5509.3354	---	---
11N20SISO	Ant1	5580	19.028	5570.3906	5589.4186	---	---
11N20SISO	Ant1	5700	18.917	5690.6993	5709.6163	---	---
11N20SISO	Ant1	5745	18.480	5735.8154	5754.2954	---	---
11N20SISO	Ant1	5785	19.048	5775.4916	5794.5396	---	---
11N20SISO	Ant1	5825	18.099	5816.0339	5834.1329	---	---

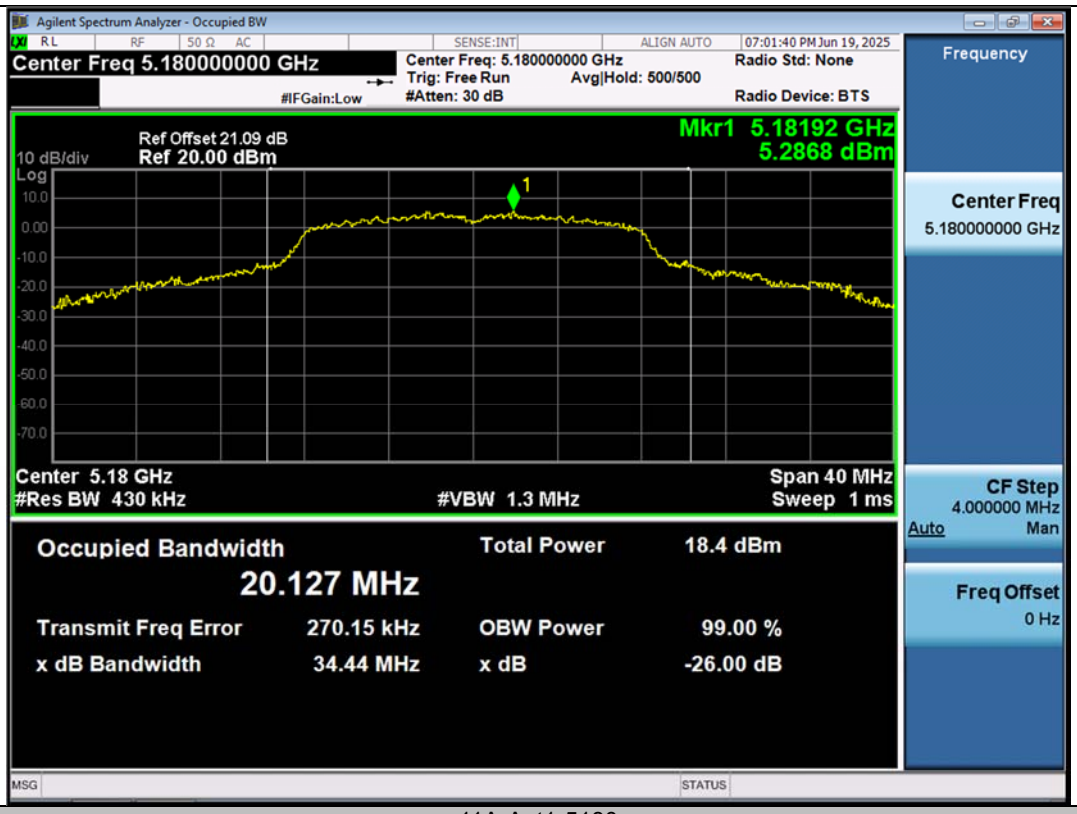

11A-Ant1-5180

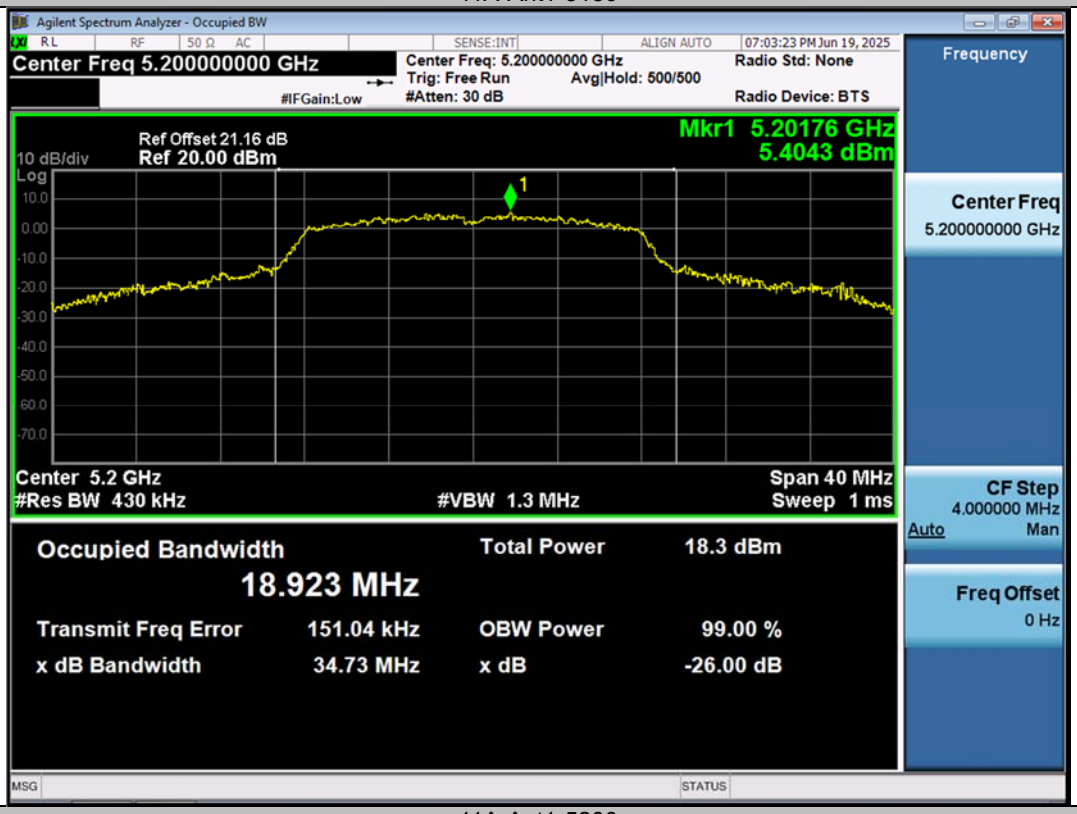

11A-Ant1-5200

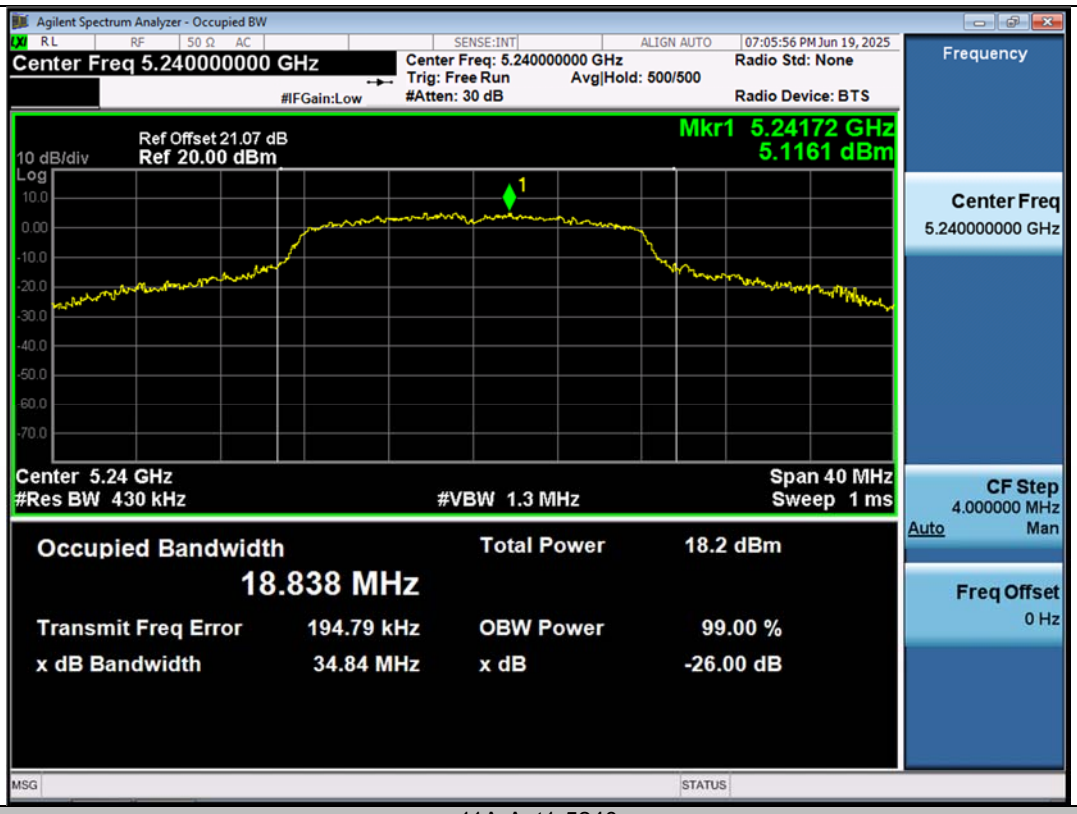

11A-Ant1-5240

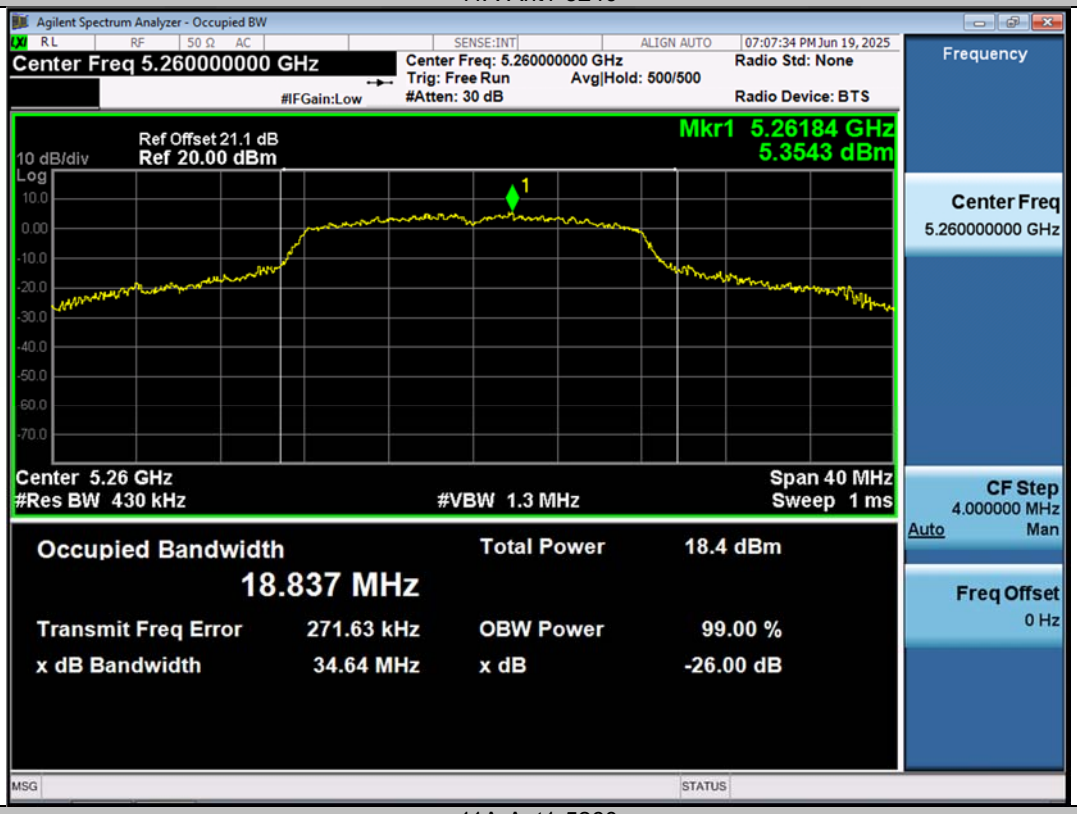

11A-Ant1-5260

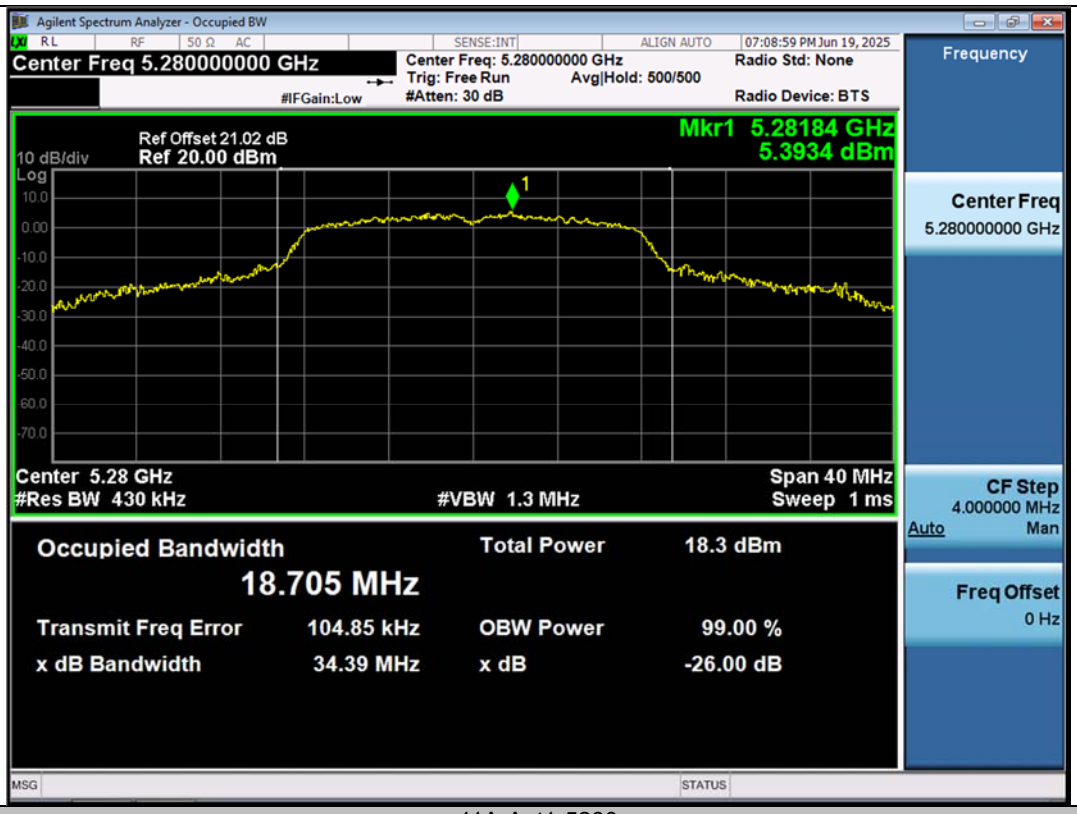

11A-Ant1-5280

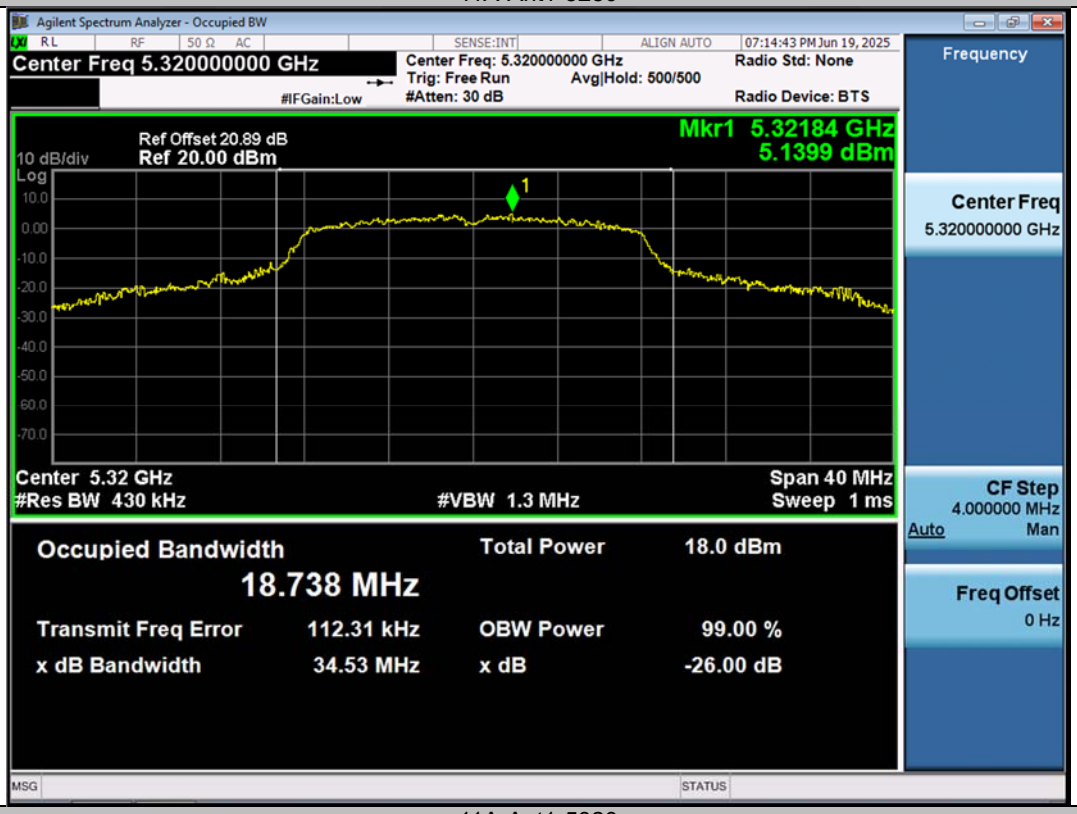

11A-Ant1-5320