Shenzhen Huaxin Information Technology Service Co., Ltd

101, R & D Building, No.3 guansheng 4th Road, Luhu Community, Guanhu Street, Longhua District, Shenzhen, Guangdong, China

Tel: +86-755-21018313 Http: //www.tecovo.net

TEST REPORT

Report No. ……:	**HX260921R001**
FCC ID……:	**2BN5S-2601B**
IC……:	**33667-2601B**
Applicant……:	**REOLINK TECHNOLOGY PTE. LTD.**
Address……:	31 KAKI BUKIT ROAD 3, #06-02, TECHLINK, SINGAPORE 417818
Manufacturer……:	**REOLINK TECHNOLOGY PTE. LTD.**
Address……:	31 KAKI BUKIT ROAD 3, #06-02, TECHLINK, SINGAPORE 417818
Product Name……:	**Video Doorbell**
Trade Mark……:	Reolink
Model/Type reference……:	Reolink Video Doorbell SE
Listed Model(s) ……:	D330B
Standard……:	**FCC CFR Title 47 Part 15 Subpart C Section 15.249** **RSS-210 Issue 11**
Date of receipt of test sample…:	Sep. 10, 2026
Date of testing……..:	Sep. 11, 2026 ~ Sep. 21, 2026
Date of issue……....:	Sep. 22, 2026
Result……:	**PASS**

Compiled by: (Printed name + signature)	Terry Su	Terry Su
Approved by: (Printed name + signature)	Amy Zhai	Amy zhai

Testing Laboratory Name……:	**Shenzhen Huaxin Information Technology Service Co., Ltd**
Address……:	101, R & D Building, No.3 guansheng 4th Road, Luhu Community, Guanhu Street, Longhua District, Shenzhen, Guangdong, China

This test report shall not be copied in any form except with the written approval of our laboratory. The customer shall not claim that the product has been endorsed by Shenzhen Huaxin Information Technology Service Co., Ltd. based on this report, The test results in the report are only applicable to the samples tested. Without the signatures of the compiled engineer and the approver, the test report will be invalid. Any objection shall be submitted to Shenzhen Huaxin Information Technology Service Co., Ltd. within 15 days from the date of receiving the report. After this period, it will not be considered. The test report only corresponds to the test sample.

Table of Contents Page

1. TEST SUMMARY 3

1.1. TEST STANDARDS 3
1.2. REPORT VERSION 3
1.3. TEST DESCRIPTION 4
1.4. TEST FACILITY 5
1.5. MEASUREMENT UNCERTAINTY 5
1.6. ENVIRONMENTAL CONDITIONS 6

2. GENERAL INFORMATION 7

2.1. CLIENT INFORMATION 7
2.2. GENERAL DESCRIPTION OF EUT 7
2.3. DESCRIPTION OF TEST MODES 8
2.4. ACCESSORY EQUIPMENT INFORMATION 8
2.5. MEASUREMENT INSTRUMENTS LIST 9

3. TEST ITEM AND RESULTS 11

3.1. AC POWER LINE CONDUCTED EMISSIONS 11
3.2. 20 DB OCCUPIED BANDWIDTH 14
3.3. RADIATED FIELD STRENGTH OF THE FUNDAMENTAL SIGNAL 16
3.4. RADIATED SPURIOUS EMISSIONS AND BANDEDGE EMISSION 19
3.5. ANTENNA REQUIREMENT 29

1. TEST SUMMARY

1.1. Test Standards

The tests were performed according to following standards:

FCC Rules Part 15.249: Operation within the bands 902-928 MHz, 2400-2483.5 MHz, 5725-5875 MHz, and 24.0-24.25 GHz.
ANSI C63.10-2020+COR. 1-2023+C63.10A-2024+ERRATA TO C63.10A-2024: American National Standard for Testing Unlicensed Wireless Devices.
RSS-210 Issue 11: Licence-Exempt Radio Apparatus: Category I Equipment
RSS-Gen Issue 6: General Requirements for Compliance of Radio Apparatus.

1.2. Report version

Revised No.	Date of issue	Description
01	Sep. 22, 2026	Original

1.3. Test Description

Test Item	Section in CFR 47	RSS-210	Result	Test Engineer
AC Power Line Conducted Emissions	15.207	RSS-Gen 7.4.2	PASS	Ann Lu
20dB Occupied Bandwidth	15.215/15.249	RSS-210 B.10 RSS-Gen 5.1	PASS	Sain Liao
Field strength of the Fundamental signal	15.249(a)	RSS-210 B.10	PASS	Sain Liao
Spurious Emissions	15.209/15.249(a)	RSS-210 B.10	PASS	Sain Liao
Band edge Emissions	15.205/15.249(d)	RSS-210 B.10	PASS	Sain Liao
Antenna requirement	15.203	RSS-GEN 5.2	PASS	Sain Liao

Note: The measurement uncertainty is not included in the test result.

"N/A" This device is only powered battery, no need for part 15.207.

1.4. Test Facility

Shenzhen Huaxin Information Technology Service Co., Ltd

Add: 101, R & D Building, No.3 guansheng 4th Road, Luhu Community, Guanhu Street, Longhua District, Shenzhen, Guangdong, China

Laboratory accreditation

The test facility is recognized, certified, or accredited by the following organizations:

A2LA-Lab Cert. No.: 6855.01

Shenzhen Huaxin Information Technology Service Co., Ltd EMC Laboratory has been accredited by A2LA for technical competence in the field of electrical testing, and proved to be in compliance with ISO/IEC 17025: 2017 General Requirements for the Competence of Testing and Calibration Laboratories and any additional program requirements in the identified field of testing.

Industry Canada (Company Number: 31786, CAB Identifier: CN0147)

Shenzhen Huaxin Information Technology Service Co., Ltd EMC Laboratory has been registered by Certification and Engineer Bureau of Industry Canada for the performance of with Registration NO.: 31786.

FCC (Registration No.: 932271, Designation Number CN1344)

Shenzhen Huaxin Information Technology Service Co., Ltd EMC Laboratory has been registered and fully described in a report filed with the (FCC)Federal Communications Commission. The acceptance letter from the FCC is maintained in our files. Registration NO.: 932271.

1.5. Measurement Uncertainty

The data and results referenced in this document are true and accurate. The reader is cautioned that there may be errors within the calibration limits of the equipment and facilities. The measurement uncertainty was calculated for all measurements listed in this test report acc. to TR-100028-01” Electromagnetic compatibility and Radio spectrum Matters (ERM); Uncertainties in the measurement of mobile radio equipment characteristics; Part 1” and TR-100028-02 “Electromagnetic compatibility and Radio spectrum Matters (ERM); Uncertainties in the measurement of mobile radio equipment characteristics; Part 2 “ and is documented in the Shenzhen Huaxin Information Technology Service Co., Ltd quality system acc. to DIN EN ISO/IEC 17025. Furthermore, component and process variability of devices similar to that tested may result in additional deviation. The manufacturer has the sole responsibility of continued compliance of the device.

Below is the best measurement capability for Shenzhen Huaxin Information Technology Service Co., Ltd

Test Items	Measurement Uncertainty	Notes
Conducted Spurious Emissions	±1.40dB	(1)
Conducted Emissions 9kHz~30MHz	±3.10dB	(1)
Radiated Emissions 9kHz~30MHz	±3.62dB	(1)
Radiated Emissions 30~1000MHz	±4.63dB	(1)
Radiated Emissions 1~18GHz	±4.40dB	(1)
Occupied Bandwidth	±3.70%	(1)

Note (1): This uncertainty represents an expanded uncertainty expressed at approximately the 95% confidence level using a coverage factor of k=2.

1.6. Environmental conditions

During the measurement the environmental conditions were within the listed ranges:

Temperature:	21°C ~ 27°C
Relative Humidity:	40% ~ 60%
Air Pressure:	101kPa

2. GENERAL INFORMATION

2.1. Client Information

Applicant:	REOLINK TECHNOLOGY PTE. LTD.
Address:	31 KAKI BUKIT ROAD 3, #06-02, TECHLINK, SINGAPORE 417818
Manufacturer:	EZTECH DIGITAL INC.
Address:	251 Little Falls Drive, Wilmington, New Castle County, Delaware 19808

2.2. General Description of EUT

Product Name:	Video Doorbell
Trade Mark:	Reolink
Model/Type reference:	Reolink Video Doorbell SE
Listed Model(s):	D330B
Model differences:	It's just that the model names and sales channels are different.
Power supply:	24Vdc from AC 1.5Vdc form AA*4 size battery
Hardware version:	/
Software version:	/
Samples No.:	YP260907-E002-1
RF parameter	
Modulation:	ASK
Operation frequency:	915MHz
Channel number:	1
Antenna type:	Internal antenna
Antenna gain:	1.45dBi

2.3. Description of Test Modes

The EUT has been tested under test mode condition. The Applicant provides software to control the EUT for staying in continuous transmitting and receiving mode for testing.

Operation Frequency List:

Channel	Frequency (MHz)
01	915

Test Mode

For RF test items
The engineering test program was provided and enabled to make EUT continuous transmit. (duty cycle>98%).
For AC power line conducted emissions:
The EUT was set to connect with large package sizes transmission.
For Radiated spurious emissions test item:
The engineering test program was provided and enabled to make EUT continuous transmit. The EUT in each of three orthogonal axis emissions had been tested, but only the worst case (X axis) data recorded in the report.

2.4. Accessory Equipment Information

Equipment Information			
Name	Model	S/N	Manufacturer
AC/DC adapter	DCT12W240050US-B0 Output: 24Vdc/0.5A	/	TRANSIN
Cable Information			
Name	Shielded Type	Ferrite Core	Length
DC in cable	Without	Without	3m
Test Software Information			
Name	Versions	/	/
Engineering mode	/	/	/

2.5. Measurement Instruments List

RF Test System - SRD					
Item	Test Equipment	Manufacturer	Model No.	Versions/ Serial No.	Calibrated until
1	Spectrum Analyzer	Agilent	N9020A	MY51280803	Apr. 08, 2027
2	Wideband Radio Communication Tester	R&S	CMW500	157763	Apr. 08, 2027
3	MXG Vector Signal Generator	Agilent	N5182A	101795	Apr. 08, 2027
4	EXG Analog Signal Generator	Agilent	N5181A	MY47421151	Apr. 08, 2027
5	RF Sensor Unit	Techy	TR1029-2	20220428P009	Apr. 08, 2027
6	High and low temperature test chamber	Asprey	LX-225L	2020091401	Apr. 08, 2027
7	SRD Test Software	TACHOY	RTS	V1.0.0	/
8	2G/3G/4G Test Software	TST	TST-PASS	V2.0	/

Radiated emission					
Item	Test Equipment	Manufacturer	Model No.	Versions/ Serial No.	Calibrated until
1	EMI spectrum receiver	R&S	ESR7	102543	Apr. 09, 2027
2	9*6*6 anechoic chamber	Mao Rui	9*6*6	/	Apr. 09, 2028
3	Spectrum analyzer	R&S	FSV40-N	101795	Apr. 09, 2027
4	Preamplifier	Agilent	8449B	3008A00551	Apr. 08, 2027
5	Preamplifier	HP	8447D	1616A02061	Apr. 09, 2027
6	Preamplifier	SKET	LNPA1840G-50	SK2019040302	Apr. 09, 2027
7	Horn Antenna	SCHWARZBECK	BBHA9170	00369	Apr. 10, 2028
8	Horn Antenna	A. H. System, Inc	SAS-571	915	Apr. 10, 2028
9	Trilog-Broadband Antenna	SCHWARZBECK	VULB 9168	01318	Apr. 10, 2028
10	Loop Antenna	SCHWARZBECK	FMZB1519B	00128	Apr. 08, 2027
11	6dB Fixed Attenuator	SKET	AP_DC01G-2W-N-6dB	SK2021012803	Apr. 08, 2027
12	RF Cable 0.009~1000MHz	Langjingkeji	N/J-NJ-RG58(1G) 9m	/	Apr. 09, 2027
13	RF Cable 1000~18000MHz	Langjingkeji	N/J-SMAAJ-406(18G) 9m	/	Apr. 09, 2027
14	RF Cable	Langjingkeji	2.92/M-2.92/M-0.5M	/	Apr. 12, 2027
15	RF Cable 18000~40000MHz	Langjingkeji	2.92/M-2.92/M-3M	/	Apr. 12, 2027
16	Test Software	SKET	EMC-I	V1.4.0.1	/
17	Test Software	FARA	EZ-EMC	FA-03A3	/

Conducted emission					
Item	Test Equipment	Manufacturer	Model No.	Versions/ Serial No.	Calibrated until
1	LISN	R&S	ENV216	101291	Apr. 09, 2027
2	LISN	R&S	ESH3-Z5	894981/024	Apr. 09, 2027

3	EMI Test Receiver	R&S	ESR7	102543	Apr. 09, 2027
5	RF Cable	Langjingkeji	N/J-NJ-RG58(1G) 10m	/	Apr. 09, 2027
6	Test Software	SKET	EMC-I	V1.4.0.1	/

Note: 1. The Cal. Interval was one year.
2. The Cal. Interval was three year of the chamber
3. The cable loss has calculated in test result which connection between each test instruments..

3. TEST ITEM AND RESULTS

3.1. AC Power Line Conducted Emissions

Limit

Frequency	Maximum RF Line Voltage (dBμV)	
	Quasi-peak Level	Average Level
150kHz~500kHz	66 ~ 56 *	56 ~ 46 *
500kHz~5MHz	56	46
5MHz~30MHz	60	50

Notes:
(1) *Decreasing linearly with logarithm of the frequency.
(2) The lower limit shall apply at the transition frequencies.
(3) The limit decrease in line with the logarithm of the frequency in the range of 0.15 to 0.50MHz.

Test Configuration

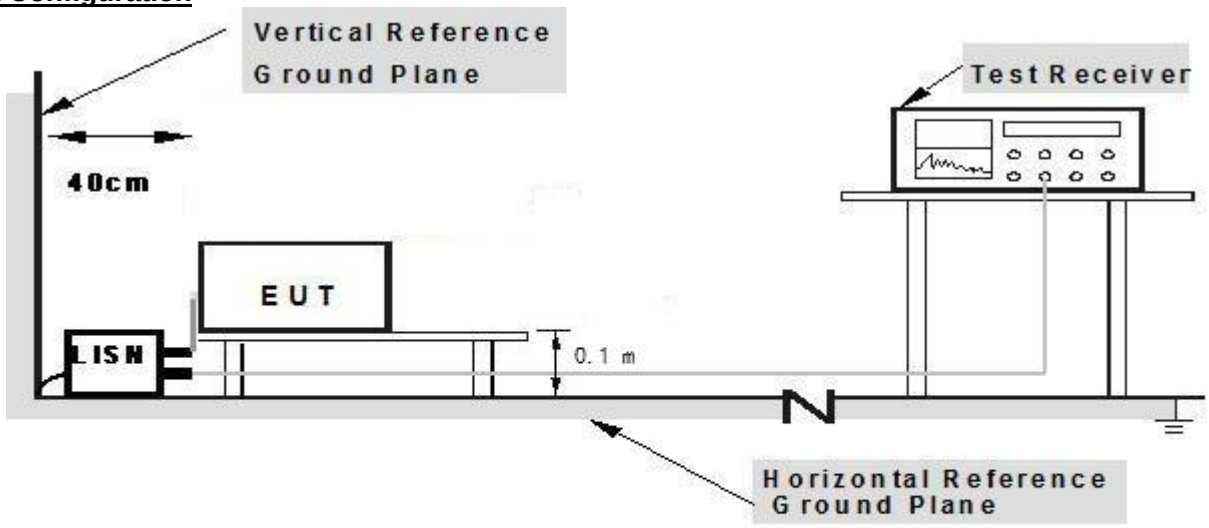

Note: 1.Support units were connected to second LISN.
2.Both of LISNs (AMN) are 80 cm from EUT and at least 80 from other units and other metal planes

Test Procedure

1. The EUT was setup according to ANSI C63.10-2020+COR. 1-2023+C63.10A-2024+ERRATA TO C63.10A-2024 requirements.
2. The EUT was placed on a platform of nominal size, 1 m by 1.5 m, raised 10 cm above the conducting ground plane. The vertical conducting plane was located 40 cm to the rear of the EUT. All other surfaces of EUT were at least 10 cm from any other grounded conducting surface.
3. The EUT and simulators are connected to the main power through a line impedances stabilization network (LISN). The LISN provides a 50ohm /50uH coupling impedance for the measuring equipment. The peripheral devices are also connected to the main power through a LISN. (Please refer to the block diagram of the test setup and photographs)
4. Each current-carrying conductor of the EUT power cord, except the ground (safety) conductor, was individually connected through a LISN to the input power source.
5. The excess length of the power cord between the EUT and the LISN receptacle were folded back and forth at the center of the lead to form a bundle not exceeding 40 cm in length.
6. Conducted Emissions were investigated over the frequency range from 0.15MHz to 30MHz using a receiver bandwidth of 9 kHz.
7. During the above scans, the emissions were maximized by cable manipulation.

Test Mode

Please refer to the clause 2.3

Test Results

Test Voltage:	AC 120V/60 Hz
Terminal:	Line

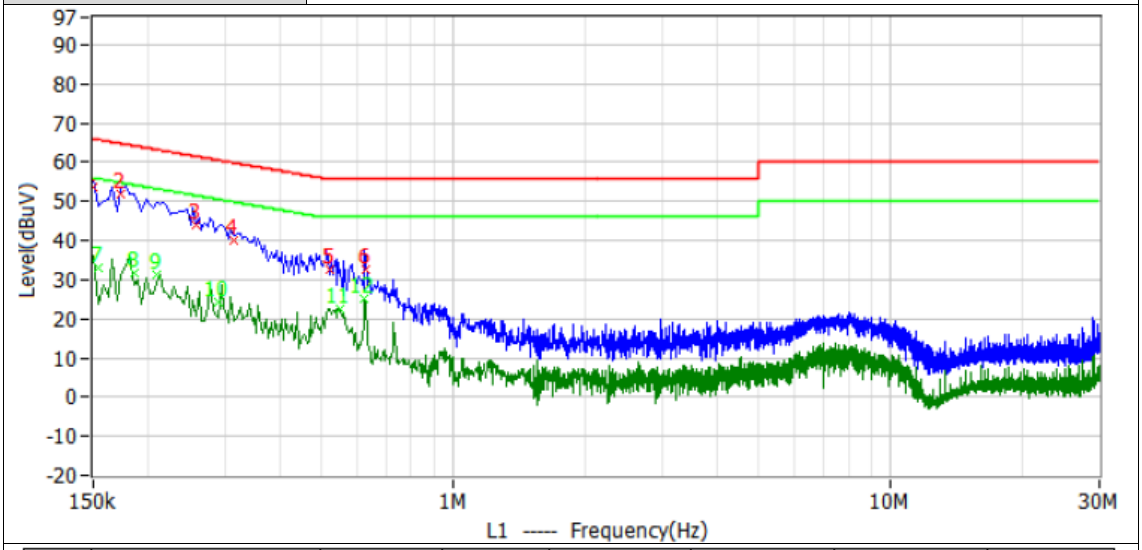

No.	Frequency	Reading dBuV	Factor dB	Level dBuV	Limit dBuV	Delta dB	Detector
1	150.000kHz	44.13	9.60	53.73	66.00	-12.27	QP
2	174.000kHz	42.09	9.60	51.69	64.77	-13.08	QP
3	258.000kHz	34.55	9.60	44.15	61.50	-17.35	QP
4	314.000kHz	30.39	9.60	39.99	59.86	-19.87	QP
5	522.000kHz	23.06	9.60	32.66	56.00	-23.34	QP
6	630.000kHz	22.89	9.60	32.49	56.00	-23.51	QP
7	154.000kHz	23.48	9.60	33.08	55.78	-22.70	AV
8	186.000kHz	22.06	9.60	31.66	54.21	-22.55	AV
9	210.000kHz	21.56	9.60	31.16	53.21	-22.05	AV
10	290.000kHz	14.46	9.60	24.06	50.52	-26.46	AV
11	550.000kHz	12.75	9.60	22.35	46.00	-23.65	AV
12	626.000kHz	15.63	9.60	25.23	46.00	-20.77	AV

Emission Level= Read Level+ Correct Factor

Test Voltage:	AC 120V/60 Hz
Terminal:	Neutral

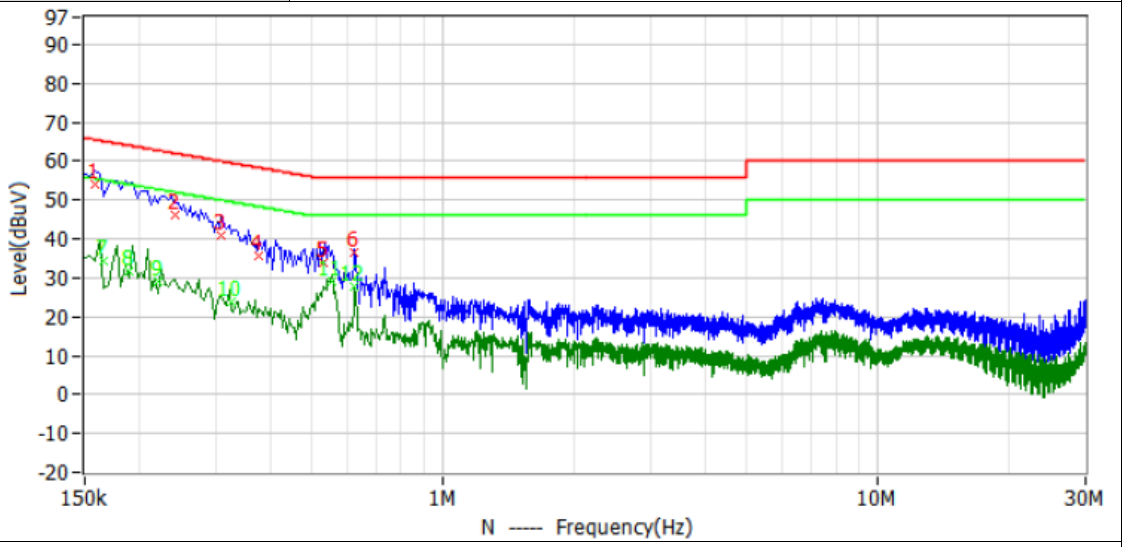

No.	Frequency	Reading dBuV	Factor dB	Level dBuV	Limit dBuV	Delta dB	Detector
1	158.000kHz	44.37	9.70	54.07	65.57	-11.50	QP
2	242.000kHz	36.64	9.70	46.34	62.03	-15.69	QP
3	310.000kHz	31.24	9.70	40.94	59.97	-19.03	QP
4	378.000kHz	26.17	9.70	35.87	58.32	-22.45	QP
5	530.000kHz	24.40	9.70	34.10	56.00	-21.90	QP
6	626.000kHz	26.72	9.70	36.42	56.00	-19.58	QP
7	166.000kHz	24.69	9.70	34.39	55.16	-20.77	AV
8	190.000kHz	22.04	9.70	31.74	54.04	-22.30	AV
9	222.000kHz	19.26	9.70	28.96	52.74	-23.78	AV
10	326.000kHz	14.14	9.70	23.84	49.55	-25.71	AV
11	554.000kHz	19.53	9.70	29.23	46.00	-16.77	AV
12	626.000kHz	17.99	9.70	27.69	46.00	-18.31	AV

Emission Level= Read Level+ Correct Factor

3.2. 20 dB Occupied Bandwidth

Limit

The occupied bandwidth of momentarily operated devices shall be less than or equal to 0.25% of the centre frequency for devices operating between 70 MHz and 900MHz. For devices operating above 900 MHz, the occupied bandwidth shall be less than or equal to 0.5% of the centre frequency.

Test Configuration

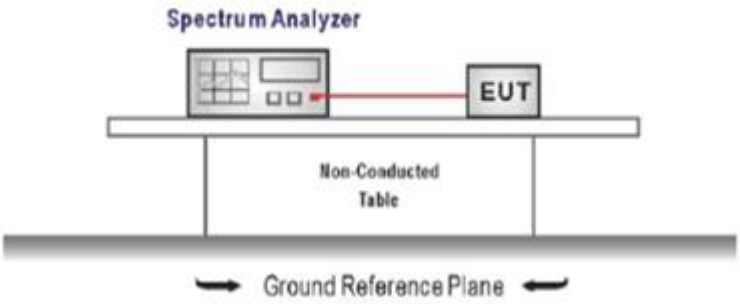

Test Procedure

1. The transmitter output was connected to the spectrum analyzer through an attenuator, the path loss was compensated to the results for each measurement.
2. Set to the maximum power setting and enable the EUT transmit continuously
3. Use the following spectrum analyzer settings:
   Span = approximately 2 to 3 times the 20 dB bandwidth, centered on a test channel
   RBW ≥ 1% of the 20 dB bandwidth, VBW ≥ RBW
   Sweep = auto, Detector function = peak, Trace = max hold
4. Measure and record the results in the test report.

Test Mode

Please refer to the clause 2.3

Test Results

Channel	20dB Bandwidth (KHz)	99% Bandwidth (KHz)	Result
01	49.654	51.60	Pass

99% Bandwidth		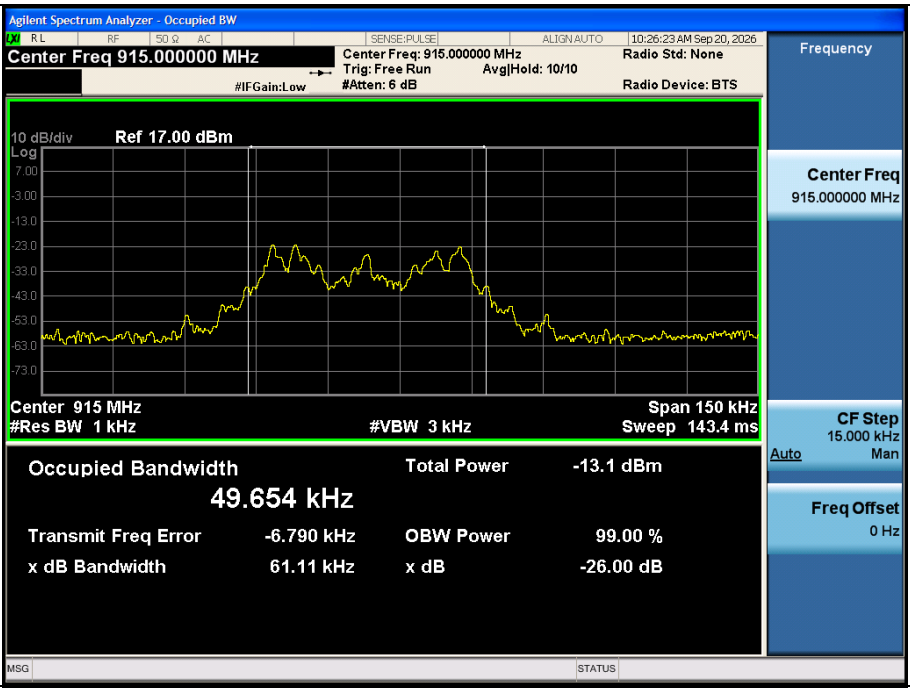	
20dB Bandwidth			

3.3. Radiated field strength of the fundamental signal

Limit

Fundamental frequency	Field strength of fundamental (millivolts/meter)	Field strength of harmonics (microvolts/meter/)
902-928 MHz	50 (94dBuV/m @3m)	500 (54dBuV/m @3m)
2400-2483.5 MHz	50 (94dBuV/m @3m)	500 (54dBuV/m @3m)
5725-5875 MHz	50 (94dBuV/m @3m)	500 (54dBuV/m @3m)
24.0-24.25 GHz	250 (108dBuV/m @3m)	2500 (68dBuV/m @3m)

Frequencies above 1000 MHz, the field strength limits are based on average limits

Test Configuration

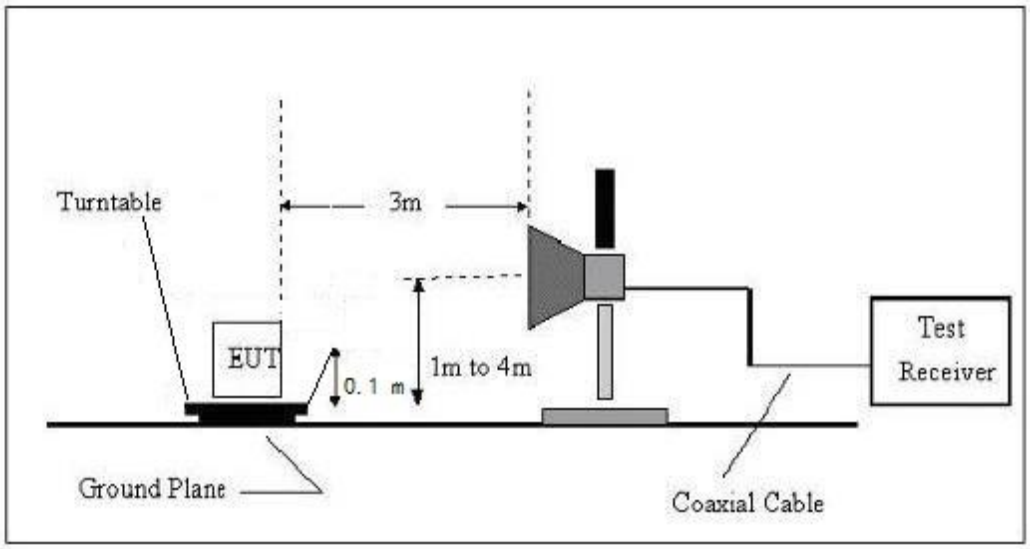

Test Procedure

1. The EUT was setup and tested according to ANSI C63.10-2020+COR. 1-2023+C63.10A-2024+ERRATA TO C63.10A-2024 requirements.
2. The EUT is placed on a turn table which is 0.1 meter above ground. The turn table is rotated 360 degrees to determine the position of the maximum emission level.
3. The EUT was positioned such that the distance from antenna to the EUT was 3 meters.
4. The antenna is scanned from 1 meter to 4 meters to find out the maximum emission level. This is repeated for both horizontal and vertical polarization of the antenna. In order to find the maximum emission, all of the interface cables were manipulated according to ANSI C63.10-2020+COR. 1-2023+C63.10A-2024+ERRATA TO C63.10A-2024 on radiated measurement.
5. The receiver set as follow:
   RBW=1MHz, VBW=3MHz Peak detector for Peak value.

Test Mode

Please refer to the clause 2.3

Test Results

Ant. Pol.	Horizontal
Test Mode	915MHz

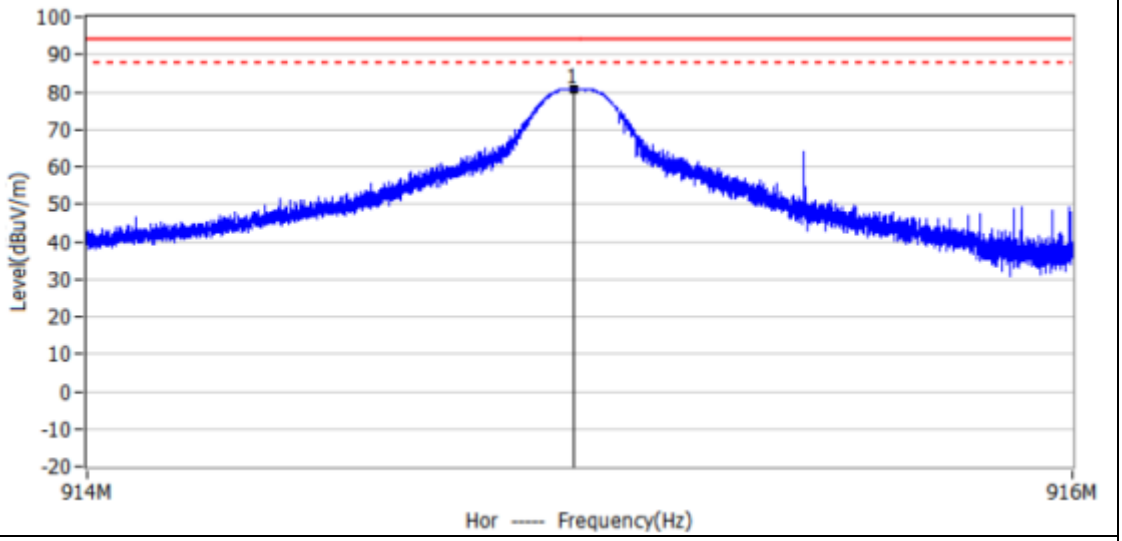

No.	Frequency	Reading dBuV	Factor dB/m	Level dBuV/m	Limit dBuV/m	Delta dB	Detector	Polar
1*	914.988MHz	56.5	24.3	80.8	94.0	-13.2	PK	Hor

Remarks:
1.Factor (dB/m) = Antenna Factor (dB/m)+Cable Factor (dB)-Pre-amplifier Factor
2.Margin value = Level -Limit value

Ant. Pol.	Vertical
Test Mode	915MHz

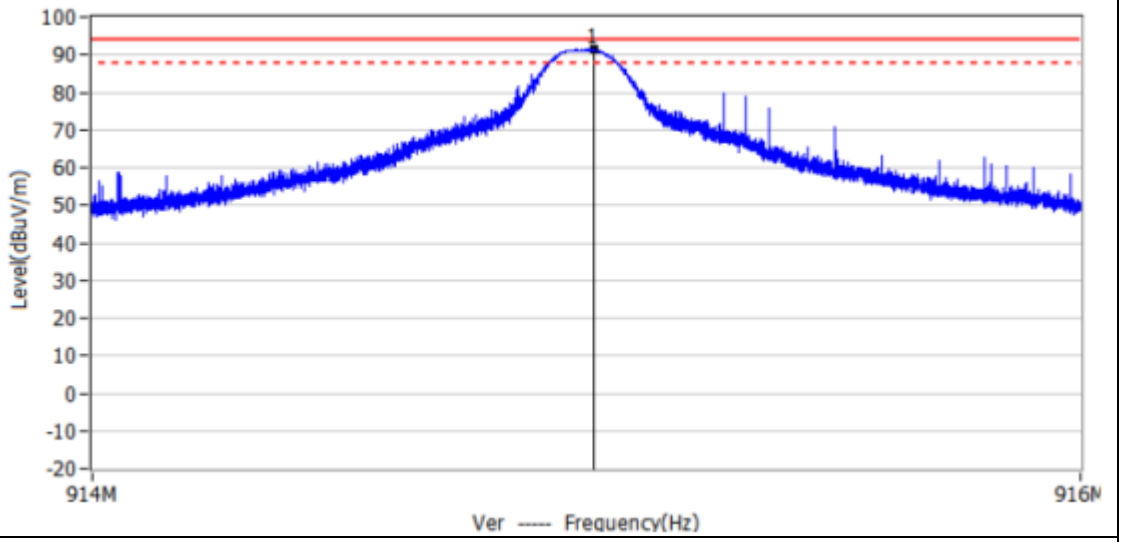

No.	Frequency	Reading dBuV	Factor dB/m	Level dBuV/m	Limit dBuV/m	Delta dB	Detector	Polar
1*	915.014MHz	67.0	24.3	91.3	94.0	-2.7	PK	Ver

Remarks:
1.Factor (dB/m) = Antenna Factor (dB/m)+Cable Factor (dB)-Pre-amplifier Factor
2.Margin value = Level -Limit value

3.4. Radiated Spurious Emissions and Bandedge Emission

Limit

FCC CFR Title 47 Part 15 Subpart C Section 15.209/ RSS-Gen 7.4.3

Frequency	Limit (dBuV/m @3m)	Value
30MHz~88MHz	40.00	Quasi-peak
88MHz~216MHz	43.50	Quasi-peak
216MHz~960MHz	46.00	Quasi-peak
960MHz~1GHz	54.00	Quasi-peak
Above 1GHz	54.00	Average
	74.00	Peak

Test Configuration

- 9 kHz ~ 30 MHz

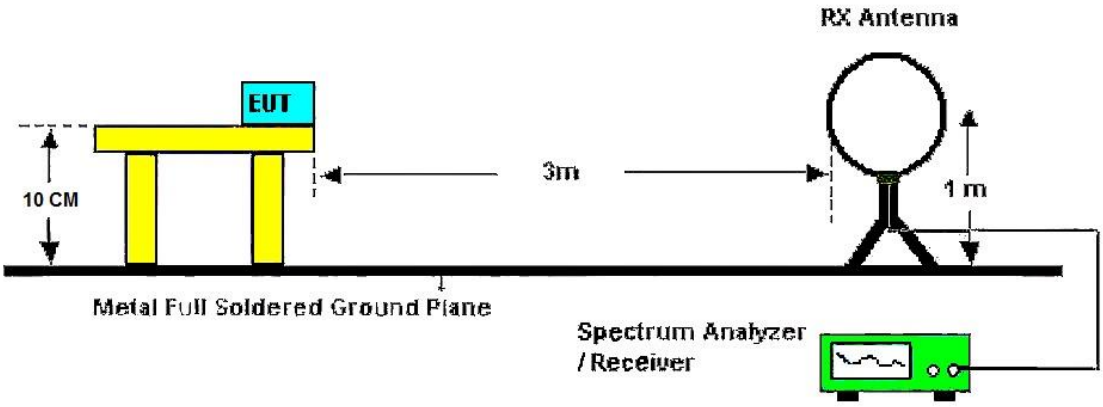

- 30 MHz ~ 1 GHz

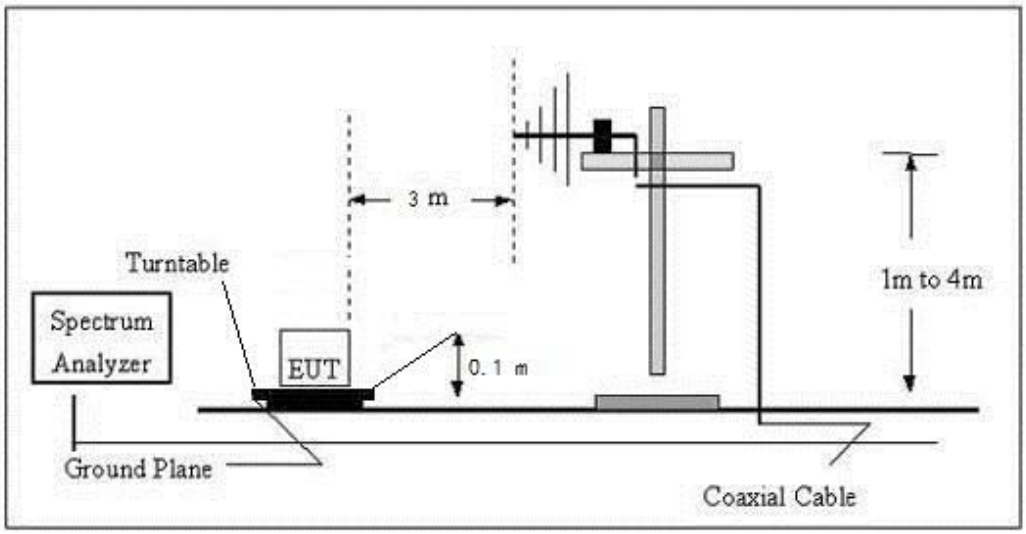

- Above 1 GHz

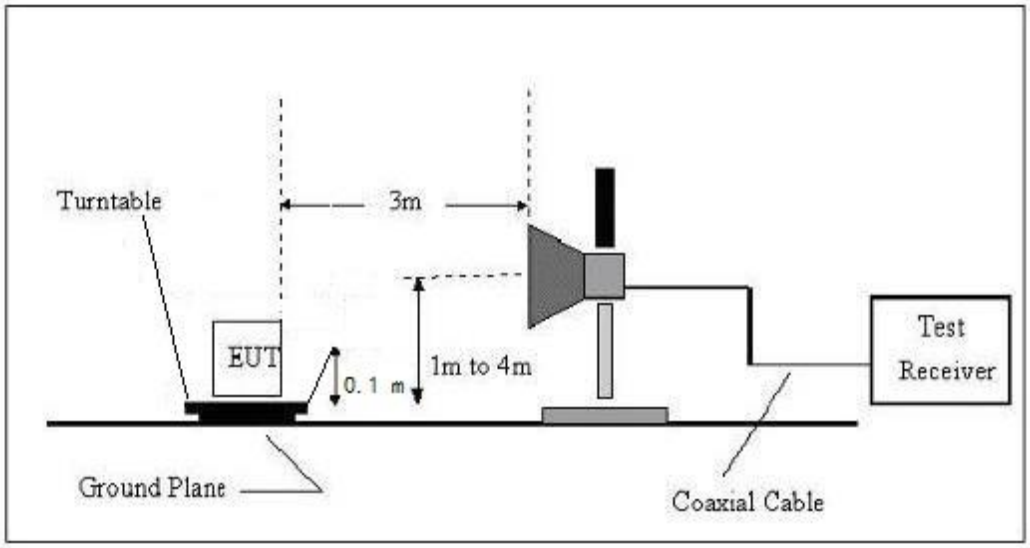

Test Procedure

1. The EUT was setup and tested according to ANSI C63.10-2020+COR. 1-2023+C63.10A-2024+ERRATA TO C63.10A-2024 requirements.
2. The EUT is placed on a turn table which is 0.1 meter above ground for below 1 GHz, and 0.1 m for above 1 GHz. The turn table is rotated 360 degrees to determine the position of the maximum emission level.
3. The EUT was set 3 meters from the receiving antenna, which was mounted on the top of a variable height antenna tower. For each suspected emission, the EUT was arranged to its worst case and then tune the Antenna tower (from 1 m to 4 m) and turntable (from 0 degree to 360 degrees) to find the maximum reading. A pre-amp and a high pass filter are used for the test in order to get better signal level to comply with the guidelines.
4. Set to the maximum power setting and enable the EUT transmit continuously.
5. Use the following spectrum analyzer settings
   Span shall wide enough to fully capture the emission being measured;
   (1)Below 1 GHz:
   RBW=120 kHz, VBW=300 kHz, Sweep=auto, Detector function=peak, Trace=max hold;
   If the emission level of the EUT measured by the peak detector is 3 dB lower than the applicable limit, the peak emission level will be reported. Otherwise, the emission measurement will be repeated using the quasi-peak detector and reported.
   (2)From 1 GHz to 10th harmonic:
   RBW=1MHz, VBW=3MHz Peak detector for Peak value.
   RBW=1MHz, VBW=3MHz RMS detector for Average value.

Test Mode

Please refer to the clause 2.3

Test Results

Radiated Spurious Emissions

- **9 kHz ~ 30 MHz**

  The EUT was pre-scanned the frequency band (9 kHz ~ 30 MHz), found the radiated level lower than the limit, so don't show on the report.

■ **30 MHz ~ 1 GHz**

Ant. Pol.	Horizontal
Power supply mode:	AC/DC Adapter
Test Mode	915MHz

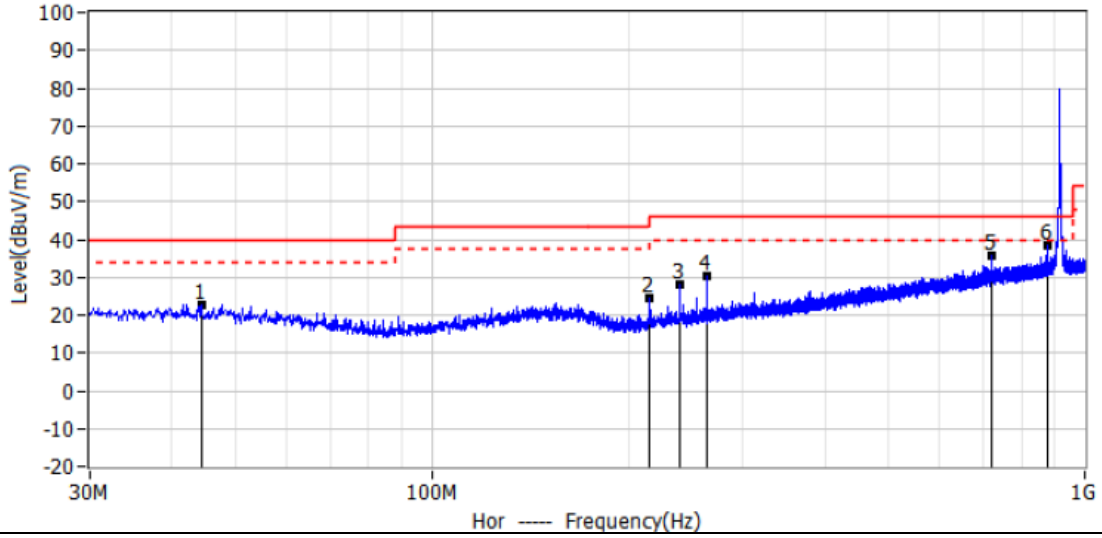

No.	Frequency	Reading dBuV	Factor dB/m	Level dBuV/m	Limit dBuV/m	Delta dB	Detector	Polar
1*	44.429MHz	9.2	13.6	22.8	40.0	-17.2	QP	Hor
2*	215.998MHz	13.3	11.2	24.5	43.5	-19.0	QP	Hor
3*	240.005MHz	15.7	12.3	28.0	46.0	-18.0	QP	Hor
4*	264.013MHz	17.6	12.7	30.3	46.0	-15.7	QP	Hor
5*	720.034MHz	13.9	21.9	35.8	46.0	-10.2	QP	Hor
6*	874.264MHz	14.7	23.6	38.3	46.0	-7.7	QP	Hor

Remarks:
1.Factor (dB/m) = Antenna Factor (dB/m)+Cable Factor (dB)-Pre-amplifier Factor
2.Margin value = Level -Limit value

Ant. Pol.	Vertical
Power supply mode:	AC/DC Adapter
Test Mode	915MHz

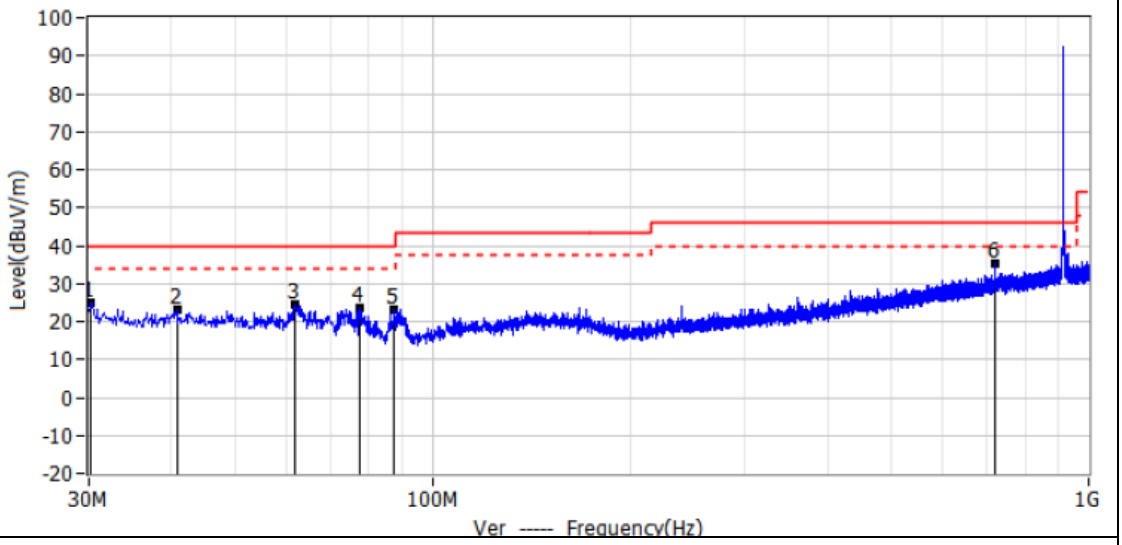

No.	Frequency	Reading dBuV	Factor dB/m	Level dBuV/m	Limit dBuV/m	Delta dB	Detector	Polar
1*	30.243MHz	12.0	13.1	25.1	40.0	-14.9	QP	Ver
2*	40.913MHz	9.2	13.8	23.0	40.0	-17.0	QP	Ver
3*	61.768MHz	12.1	12.4	24.5	40.0	-15.5	QP	Ver
4*	77.773MHz	13.5	9.9	23.4	40.0	-16.6	QP	Ver
5*	87.473MHz	13.8	9.5	23.3	40.0	-16.7	QP	Ver
6*	720.034MHz	13.5	21.9	35.4	46.0	-10.6	QP	Ver

Remarks:
1.Factor (dB/m) = Antenna Factor (dB/m)+Cable Factor (dB)-Pre-amplifier Factor
2.Margin value = Level -Limit value

Ant. Pol.	Horizontal
Power supply mode:	Battery
Test Mode	915MHz

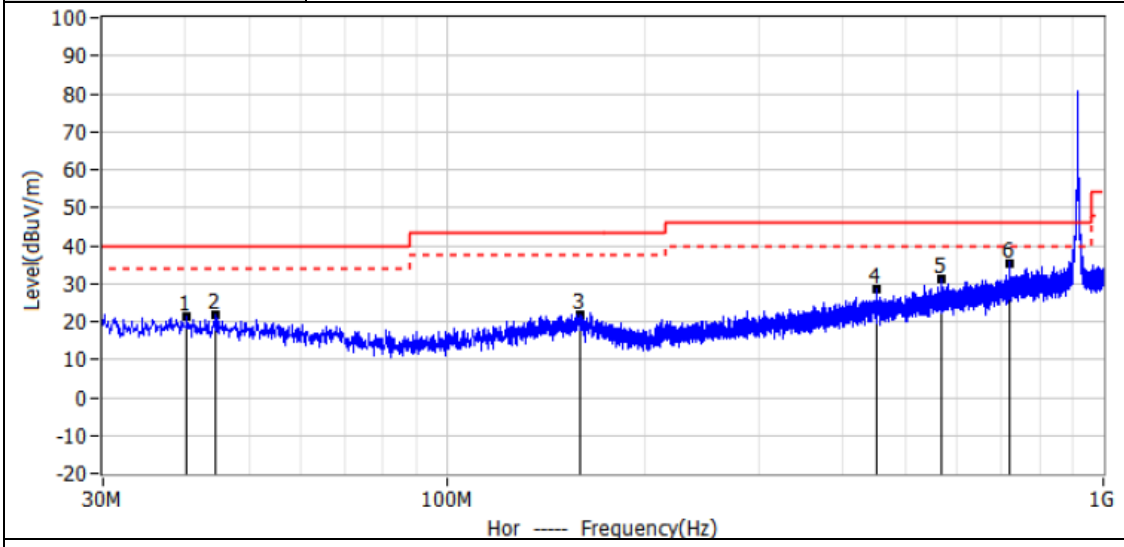

No.	Frequency	Reading dBuV	Factor dB/m	Level dBuV/m	Limit dBuV/m	Delta dB	Detector	Polar
1*	40.306MHz	7.6	13.9	21.5	40.0	-18.5	QP	Hor
2*	44.429MHz	8.1	13.6	21.7	40.0	-18.3	QP	Hor
3*	159.859MHz	7.7	14.3	22.0	43.5	-21.5	QP	Hor
4*	452.193MHz	11.0	17.7	28.7	46.0	-17.3	QP	Hor
5*	566.046MHz	11.6	19.5	31.1	46.0	-14.9	QP	Hor
6*	720.034MHz	13.6	21.9	35.5	46.0	-10.5	QP	Hor

Remarks:
1.Factor (dB/m) = Antenna Factor (dB/m)+Cable Factor (dB)-Pre-amplifier Factor
2.Margin value = Level -Limit value

Ant. Pol.	Vertical
Power supply mode:	Battery
Test Mode	915MHz

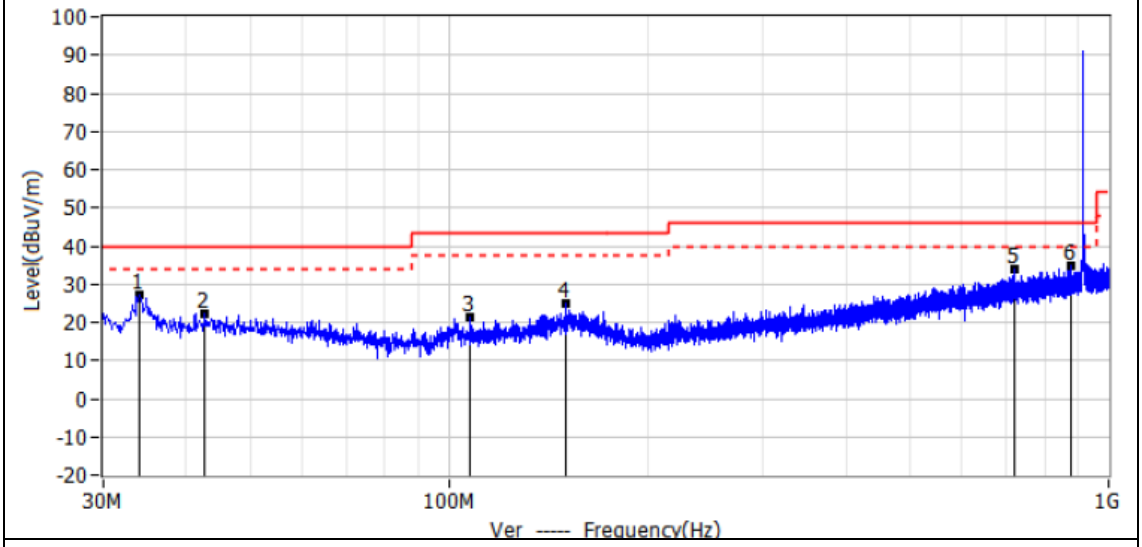

No.	Frequency	Reading dBuV	Factor dB/m	Level dBuV/m	Limit dBuV/m	Delta dB	Detector	Polar
1*	34.001MHz	13.8	13.4	27.2	40.0	-12.8	QP	Ver
2*	42.731MHz	8.7	13.7	22.4	40.0	-17.6	QP	Ver
3*	107.964MHz	10.2	11.0	21.2	43.5	-22.3	QP	Ver
4*	150.886MHz	10.6	14.3	24.9	43.5	-18.6	QP	Ver
5*	720.034MHz	12.1	21.9	34.0	46.0	-12.0	QP	Ver
6*	877.659MHz	11.1	23.7	34.8	46.0	-11.2	QP	Ver

Remarks:
1.Factor (dB/m) = Antenna Factor (dB/m)+Cable Factor (dB)-Pre-amplifier Factor
2.Margin value = Level -Limit value

■ **Above 1 GHz**

Ant. Pol.	Horizontal
Test Mode	915MHz
Remark:	No report for the emission which more than 10 dB below the prescribed limit.

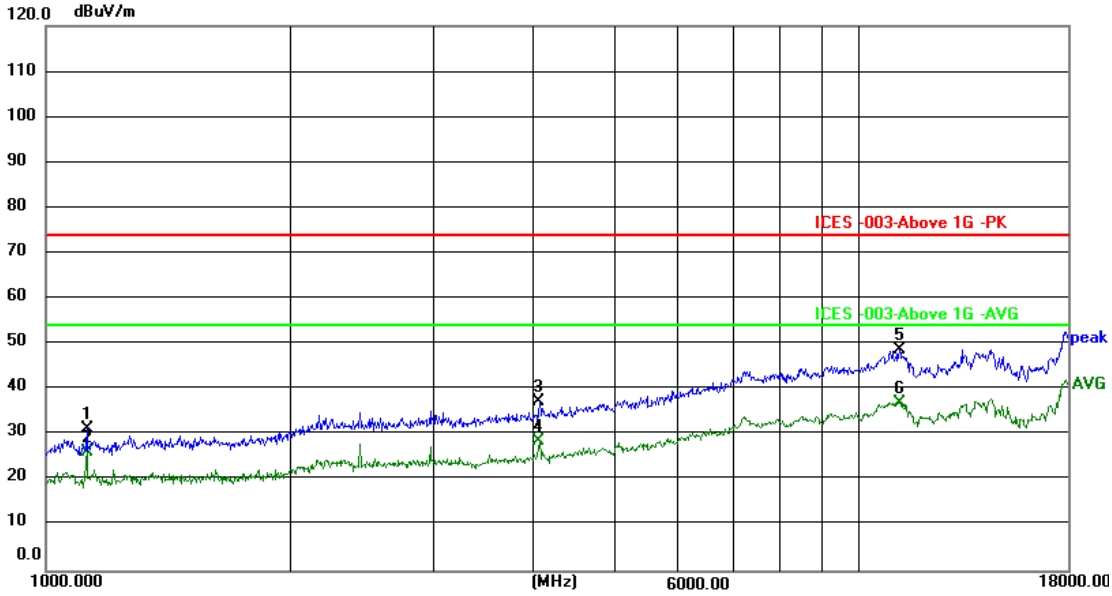

No.	Frequency (MHz)	Reading (dBuV)	Factor (dB/m)	Level (dBuV/m)	Limit (dBuV/m)	Margin (dB)	Detector
1	1125.000	56.63	-25.28	31.35	74.00	-42.65	peak
2	1125.000	51.61	-25.28	26.33	54.00	-27.67	AVG
3	4050.903	52.03	-14.53	37.50	74.00	-36.50	peak
4	4050.903	43.08	-14.53	28.55	54.00	-25.45	AVG
5	11204.896	44.27	4.59	48.86	74.00	-25.14	peak
6 *	11204.896	32.48	4.59	37.07	54.00	-16.93	AVG

Remarks:
1.Factor (dB/m) = Antenna Factor (dB/m)+Cable Factor (dB)-Pre-amplifier Factor
2.Margin value = Level -Limit value

Ant. Pol.	Vertical
Test Mode	915MHz
Remark:	No report for the emission which more than 10 dB below the prescribed limit.

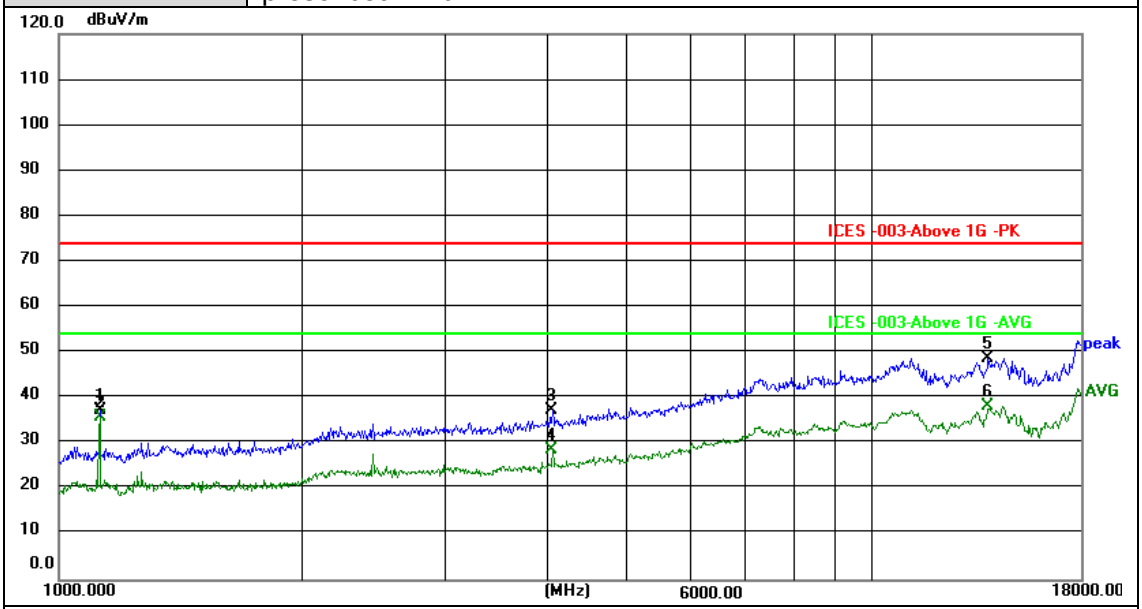

No.	Frequency (MHz)	Reading (dBuV)	Factor (dB/m)	Level (dBuV/m)	Limit (dBuV/m)	Margin (dB)	Detector
1	1125.000	62.65	-25.28	37.37	74.00	-36.63	peak
2	1125.000	61.27	-25.28	35.99	54.00	-18.01	AVG
3	4050.903	51.92	-14.53	37.39	74.00	-36.61	peak
4	4050.903	43.23	-14.53	28.70	54.00	-25.30	AVG
5	13877.076	41.08	7.77	48.85	74.00	-25.15	peak
6 *	13877.076	30.37	7.77	38.14	54.00	-15.86	AVG

Remarks:
1.Factor (dB/m) = Antenna Factor (dB/m)+Cable Factor (dB)-Pre-amplifier Factor
2.Margin value = Level -Limit value

Bandedge Emission

Ant. Pol.	Horizontal
Test Mode	915MHz

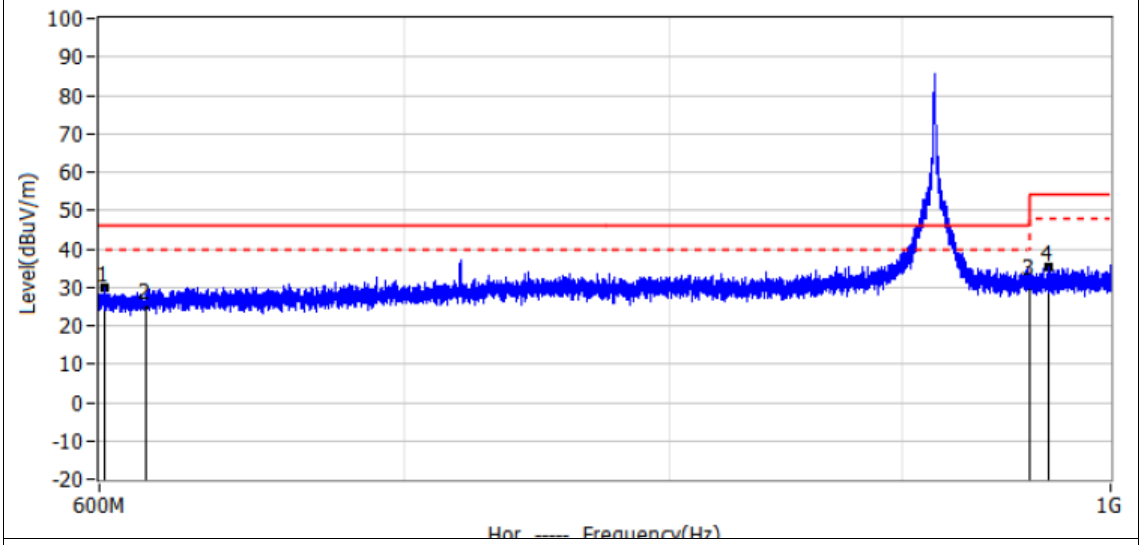

No.	Frequency	Reading dBuV	Factor dB/m	Level dBuV/m	Limit dBuV/m	Delta dB	Detector	Polar
1*	601.650MHz	9.7	20.3	30.0	46.0	-16.0	PK	Hor
2*	614.000MHz	5.0	20.6	25.6	46.0	-20.4	PK	Hor
3*	960.000MHz	7.0	24.7	31.7	46.0	-14.3	PK	Hor
4*	969.050MHz	10.3	24.8	35.1	54.0	-18.9	PK	Hor

Remark:
1.Factor (dB/m) = Antenna Factor (dB/m)+Cable Factor (dB)-Pre-amplifier Factor
2.Margin value = Level -Limit value

Ant. Pol.	Vertical
Test Mode	915MHz

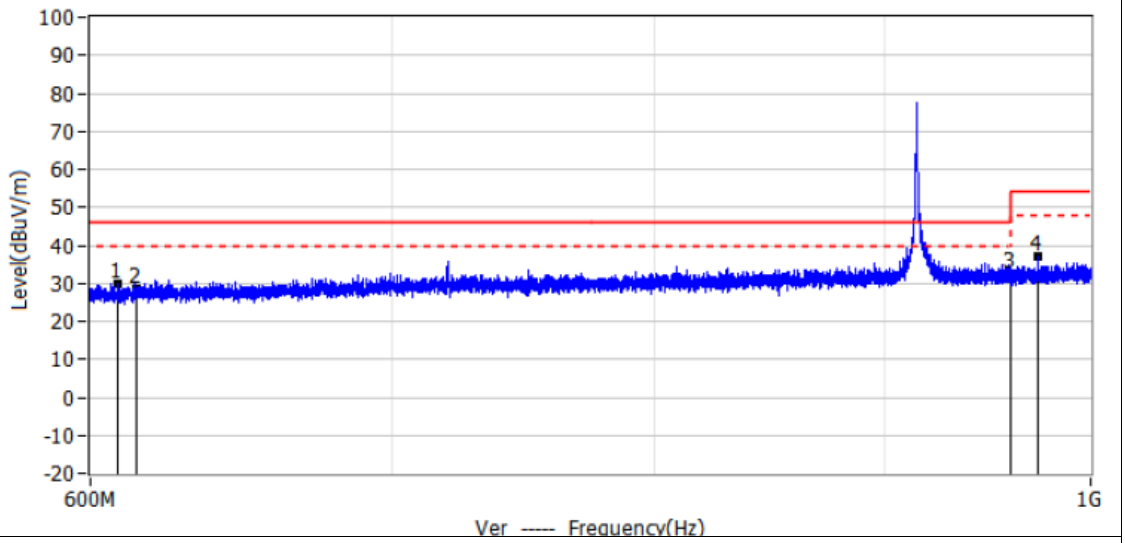

No.	Frequency	Reading dBuV	Factor dB/m	Level dBuV/m	Limit dBuV/m	Delta dB	Detector	Polar
1*	608.500MHz	9.6	20.3	29.9	46.0	-16.1	PK	Ver
2*	614.000MHz	8.1	20.6	28.7	46.0	-17.3	PK	Ver
3*	960.000MHz	8.0	24.7	32.7	46.0	-13.3	PK	Ver
4*	973.450MHz	12.2	24.7	36.9	54.0	-17.1	PK	Ver

Remark:
1.Factor (dB/m) = Antenna Factor (dB/m)+Cable Factor (dB)-Pre-amplifier Factor
2.Margin value = Level -Limit value

3.5. Antenna requirement

Requirement

FCC CFR Title 47 Part 15 Subpart C Section 15.203:

An intentional radiator shall be designed to ensure that no antenna other than that furnished by the responsible party shall be used with the device. The use of a permanently attached antenna or of antenna that uses a unique coupling to the intentional radiator, the manufacturer may design the unit so that a broken antenna can be replaced by the user, but the use of a standard antenna jack or electrical connector is prohibited.

FCC CFR Title 47 Part 15 Subpart C Section 15.247(c) (1)(i):

(i) Systems operating in the 2400~2483.5 MHz band that is used exclusively for fixed. Point-to-point operations may employ transmitting antennas with directional gain greater than 6dBi provided the maximum conducted output power of the intentional radiator is reduced by 1 dB for every 3 dB that the directional gain of the antenna exceeds 6dBi.

According to RSS-GEN Issue 6, section 5.2, The applicant for equipment certification shall provide a list of all antenna types that may be used with the transmitter, where applicable (i.e. for transmitters with detachable antenna), indicating the maximum permissible antenna gain (in dBi) and the required impedance for each antenna. The test report shall demonstrate the compliance of the transmitter with the limit for maximum equivalent isotopically radiated power (e.i.r.p.) specified in the applicable RSS, when the transmitter is equipped with any antenna type, selected from this list.
For expediting the testing, measurements may be performed using only the antenna with highest gain of each combination of transmitter and antenna type, with the transmitter output power set at the maximum level. However, the transmitter shall comply with the applicable requirements under all operational conditions and when in combination with any type of antenna from the list provided in the test report (and in the notice to be included in the user manual, provided below).
When measurements at the antenna port are used to determine the RF output power, the effective gain of the device's antenna shall be stated, based on a measurement or on data from the antenna's manufacturer. The test report shall state the RF power, output power setting and spurious emission measurements with each antenna type that is used with the transmitter being tested.

Test Result

The directional gain of the antenna less than 6dBi, please refer to the EUT internal photographs antenna photo.

**********THE END**********