# FCC PART 15 SUBPART C

Power Bank

MODEL No.: MC508

FCC ID: 2BN75-MC508

REPORT NO.:MAX250314110P01-R01

ISSUE DATE: Mar. 25, 2025

*Prepared for*

Union Suppo Battery (liaoning) Co., Ltd.

No.751,Anqian Road,Lishan Distict,Anshan,Liaoning,114051,China

*Prepared by*

MAXLAB Testing Co.,Ltd.

1/F, Building B, Xinshidai GR Park,Shiyan Street, Bao'an District, Shenzhen,Guangdong, 518052, People’s Republic of China

# Contents

**1. TEST REPORT DESCRIPTION ..... 3**

**2. SUMMARY OF TEST RESULTS ..... 5**

**3. GENERAL INFORMATION ..... 6**

3.1. Description of Device (EUT) ..... 6
3.2. Description of Support Units ..... 6
3.3. Independent Operation Modes ..... 7
3.4. Test Mode ..... 7
3.5. Description of Test Facility ..... 7
3.6. Measurement Uncertainty ..... 8

**4. MEASURING DEVICE AND TEST EQUIPMENT ..... 9**

**5. 20DB BANDWIDTH ..... 11**

5.1. Test Procedure ..... 11
5.2. Test Setup ..... 11
5.3. Test Results ..... 11

**6. POWER LINE CONDUCTED EMISSION MEASUREMENT ..... 12**

6.1. Block Diagram of Test Setup ..... 12
6.2. Limits ..... 12
6.3. Test Procedure ..... 12
6.4. Measuring Results ..... 13

**7. RADIATED EMISSION TEST ..... 16**

7.1. Measurement Procedure ..... 16
7.2. Test SET-UP (Block Diagram of Configuration) ..... 16
7.3. Radiated Emission Limit ..... 17
7.4. Measurement Result ..... 18

**8. TEST PHOTOGRAPHS AND EUT PHOTOGRAPHS ..... 22**

# 1.TEST REPORT DESCRIPTION

| | | |
|---|---|---|
| Applicant | : | Union Suppo Battery (liaoning) Co., Ltd. |
| Address | : | No.751,Anqian Road,Lishan Distict,Anshan,Liaoning,114051,China |
| Manufacturer | : | Union Suppo Battery (liaoning) Co., Ltd. |
| Address | : | No.751,Anqian Road,Lishan Distict,Anshan,Liaoning,114051,China |
| EUT | : | Power Bank |
| Model Name | : | MC508 |
| Trademark | : | ARKEEP |

Measurement Procedure Used:

| APPLICABLE STANDARDS | |
|---|---|
| STANDARD | TEST RESULT |
| FCC 47 CFR Part 15, Subpart C | PASS |

The above equipment was tested by MAXLAB Testing Co.,Ltd.The test data, data evaluation, test procedures, and equipment configurations shown in this report were made in accordance with the procedures given in ANSI C63.10 (2020) and the energy emitted by the sample EUT tested as described in this report is in compliance with conducted and radiated emission limits of FCC Rules Part 15C

The test results of this report relate only to the tested sample identified in this report.

Test Engineer: Cindy zheng

Engineer/ Cindy Zheng

Technical Manager:

RF Manager/ Vivian Jiang

# Modified Information

| Version | Report No. | Revision Data | Summary |
|---|---|---|---|
| Ver.1.0 | MAX250314110P01-R01 | Mar. 25, 2025 | Original Version |
| | | | |

## 2.SUMMARY OF TEST RESULTS

| Test Item | Section in CFR 47 | Result |
|---|---|---|
| Antenna requirement | 15.203 | Pass |
| AC Power Line Conducted Emission | 15.207 | Pass |
| Spurious Emission | 15.209(a)(f) | Pass |
| 20dB Bandwidth | 15.215 | Pass |

# 3.GENERAL INFORMATION

## 3.1.Description of Device (EUT)

| | | |
|---|---|---|
| EUT | : | Power Bank |
| Model Number | : | MC508 |
| Model different | : | / |
| Power Rating | : | Battery Energy: 19.25Wh(3.85V/5000mAh)<br>Rated Capacity: 2750mAh(5V⎓3A)<br>Type-C Input: 5V⎓3A 9V⎓2A<br>Type-C Output: 5V⎓3A 9V⎓2.22A 12V⎓1.67A<br>Wireless Output: 5W/7.5W/10W/15W(MAX)<br>Max Output Power: 20W |
| Operation Frequency for WPT | : | 111-205 KHz |
| Modulation | : | MSK |
| Antenna Type: | : | Coil Antenna |
| Date of Received | : | Mar. 13, 2025 |
| Date of Test | : | Mar. 13, 2025 to Mar. 18, 2025 |

## 3.2.Description of Support Units

The EUT has been tested as an independent unit together with other necessary accessories or support units. The following support units or accessories were used to form a representative test configuration during the tests.

| Item | Equipment | Mfr/Brand | Model/Type No. | Series No. | Note |
|---|---|---|---|---|---|
| E-1 | Power Bank | N/A | MC508 | N/A | EUT |
| E-2 | Mobile phone | SAMSUNG | S24 | N/A | Auxiliary |
| E-3 | SuperCharge | HUAWEI | HW-200500C02 | N/A | Auxiliary |

Note: (1)The support equipment was authorized by Declaration of Confirmation.
(2)For detachable type I/O cable should be specified the length in cm in『Length』column.

## 3.3.Independent Operation Modes

| Mode | Description | Remark |
|---|---|---|
| 1 | EUT + Phone(15W) | 5% |
| 2 | | 50% |
| 3 | | 95% |
| 4 | EUT + Phone(10W) | 5% |
| 5 | | 50% |
| 6 | | 95% |
| 7 | EUT + Phone(7.5W) | 5% |
| 8 | | 50% |
| 9 | | 95% |
| 10 | EUT + Phone(5W) | 5% |
| 11 | | 50% |
| 12 | | 95% |
| Remark: All the modes have tested and recorded the worst mode (mode 1-5% electricity) in the report | | |

## 3.4.Test Mode

| Test Items | Test Voltage | Operation Modes |
|---|---|---|
| CE | AC 120V/60Hz | Mode 1 |
| RE | DC 3.85V | Mode 1 |

## 3.5.Description of Test Facility

Site Description

| | |
|---|---|
| EMC Lab.: | FCC-Registration No:562200 Designation Number: CN1338<br>MAXLAB Testing Co., Ltd.has been listed on the US Federal Communications Commission list of test facilities recognized to perform electromagnetic emissions measurements.<br>A2LA-Lab Cert.No:4707.01<br>MAXLAB Testing Co, Ltd.has been listed by American Association for Laboratory Accreditation to perform electromagnetic emission measurement.<br>Industry Canada Registration Number.Is:11093A<br>CAB identifier: CN0019<br>The Laboratory has been registered by Certification and Engineering Bureau of Industry Canada for radio equipment testing. |
| Name of Firm: | MAXLAB Testing Co, Ltd. |
| Site Location: | 1/F, Building B, Xinshidai GR Park, Shiyan Street, Bao'an District, Shenzhen, Guangdong, 518052, People's Republic of China |

## 3.6.Measurement Uncertainty

| **Parameter** | **Uncertainty** |
|---|---|
| RF output power, conducted | ±1.0dB |
| Power Spectral Density, conducted | ±2.2dB |
| Radio Frequency | ± 1 x $10^{-6}$ |
| Bandwidth | ± 1.5 x $10^{-6}$ |
| Time | ±2% |
| Duty Cycle | ±2% |
| Temperature | ±1°C |
| Humidity | ±5% |
| DC and low frequency voltages | ±3% |
| Conducted Emissions (150kHz~30MHz) | ±3.64dB |
| Radiated Emission(9kHz~30MHz) | ±4.51dB |
| Radiated Emission(30MHz~1GHz) | ±5.03dB |
| Radiated Emission(1GHz~25GHz) | ±4.74dB |

# 4.MEASURING DEVICE AND TEST EQUIPMENT

| Conducted Emission | | | | | |
|---|---|---|---|---|---|
| Test Equipment | Manufacturer | Model | Serial No. | Date of Cal. | Due Date |
| Shielding Room | ZhongYu Electron | 7.3(L)x3.1(W)x2.9(H) | MAX252 | 2024-10-27 | 2025-10-26 |
| EMI Test Receiver | R&S | ESCI 7 | MAX552 | 2024-10-27 | 2025-10-26 |
| Coaxial Switch | ANRITSU CORP | MP59B | MAX225 | 2024-10-27 | 2025-10-26 |
| ENV216 2-L-V-NETZNACHB.DE | ROHDE&SCHWARZ | ENV216 | MAX226 | 2024-10-27 | 2025-10-26 |
| Coaxial Cable | MAX | N/A | MAX227 | N/A | N/A |
| Thermo meter | KTJ | TA328 | MAX233 | 2024-10-27 | 2025-10-26 |
| Absorbing clamp | Elektronik-Feinmechanik | MDS21 | MAX229 | 2024-10-27 | 2025-10-26 |
| LISN | R&S | ENV216 | 308 | 2024-10-27 | 2025-10-26 |
| LISN | R&S | ENV216 | 314 | 2024-10-27 | 2025-10-26 |

| Radiation Test equipment | | | | | |
|---|---|---|---|---|---|
| Test Equipment | Manufacturer | Model | Serial No. | Date of Cal. | Due Date |
| 3m Semi- Anechoic Chamber | ZhongYu Electron | 9.2(L)*6.2(W)*6.4(H) | MAX250 | 2024-10-27 | 2025-10-26 |
| Control Room | ZhongYu Electron | 6.2(L)*2.5(W)*2.4(H) | MAX251 | N/A | N/A |
| EMI Test Receiver | Rohde & Schwarz | ESU26 | MAX203 | 2024-10-27 | 2025-10-26 |
| BiConiLog Antenna | SCHWARZBECK MESS-ELEKTRONIK | VULB9163 | MAX214 | 2024-10-27 | 2025-10-26 |
| Double -ridged waveguide horn | SCHWARZBECK MESS-ELEKTRONIK | BBHA 9120 D | MAX208 | 2024-10-27 | 2025-10-26 |
| Horn Antenna | ETS-LINDGREN | 3160 | MAX217 | 2024-10-27 | 2025-10-26 |
| Coaxial Cable | MAX | N/A | MAX213 | 2024-10-27 | 2025-10-26 |
| Coaxial Cable | MAX | N/A | MAX211 | 2024-10-27 | 2025-10-26 |
| Coaxial cable | MAX | N/A | MAX210 | 2024-10-27 | 2025-10-26 |
| Coaxial Cable | MAX | N/A | MAX212 | 2024-10-27 | 2025-10-26 |
| Amplifier(100kHz-3 GHz) | HP | 8347A | MAX204 | 2024-10-27 | 2025-10-26 |
| Amplifier(2GHz-20 GHz) | HP | 84722A | MAX206 | 2024-10-27 | 2025-10-26 |
| Amplifier (18-26GHz) | Rohde & Schwarz | AFS33-18002 650-30-8P-44 | MAX218 | 2024-10-27 | 2025-10-26 |
| Wideband Radio Communication Tester | Rohde & Schwarz | CMW500 | MAX575 | 2024-10-27 | 2025-10-26 |
| Loop Antenna | ZHINAN | ZN30900A | MAX534 | 2024-10-27 | 2025-10-26 |

| RF Conducted Test: | | | | | |
|---|---|---|---|---|---|
| Test Equipment | Manufacturer | Model | Serial No. | Date of Cal. | Due Date |
| MXA Signal Analyzer | Agilent | N9020A | MAX566 | 2024-10-27 | 2025-10-26 |
| EMI Test Receiver | R&S | ESCI 7 | MAX552 | 2024-10-27 | 2025-10-26 |
| Spectrum Analyzer | Agilent | E4440A | MAX533 | 2024-10-27 | 2025-10-26 |
| MXG vector Signal Generator | Agilent | N5182A | MAX567 | 2024-10-27 | 2025-10-26 |
| ESG Analog Signal Generator | Agilent | E4428C | MAX568 | 2024-10-27 | 2025-10-26 |
| USB RF Power Sensor | DARE | RPR3006W | MAX569 | 2024-10-27 | 2025-10-26 |
| RF Switch Box | Shongyi | RFSW3003328 | MAX571 | 2024-10-27 | 2025-10-26 |
| Programmable Constant Temp & Humi Test Chamber | WEWON | WHTH-150L-40-880 | MAX572 | 2024-10-27 | 2025-10-26 |

Other

| Item | Name | Manufacturer | Model | Software version |
|---|---|---|---|---|
| 1 | EMC Conduction Test System | EZ | EZ-EMC | EMC-CON 3A1.1+ |
| 2 | EMC radiation test system | EZ | EZ-EMC | FA-03A2 RE+ |
| 3 | RF test system | TACHOY | RFTest | V1.0.0 |
| 4 | RF communication test system | TACHOY | RFTest | V1.0.0 |

# 5.20DB BANDWIDTH

## 5.1.Test Procedure

Set to the maximum power setting and enable the EUT transmit continuously
Set RBW = 1-5%OBW.
Set the video bandwidth (VBW) =3RBW.
Set Span= 500Hz
Set Detector = Peak.
Set Trace mode = Max hold.
Set Sweep = auto couple.
Measure and record the results in the test report.

## 5.2.Test Setup

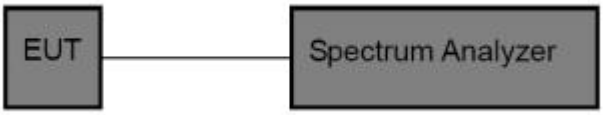


## 5.3.Test Results

| | Frequency (KHz) | 20dB bandwidth (Hz) | 99% bandwidth (Hz) | Result |
|---|---|---|---|---|
| For Phone | 159 | 106 | 259 | Pass |

For Phone

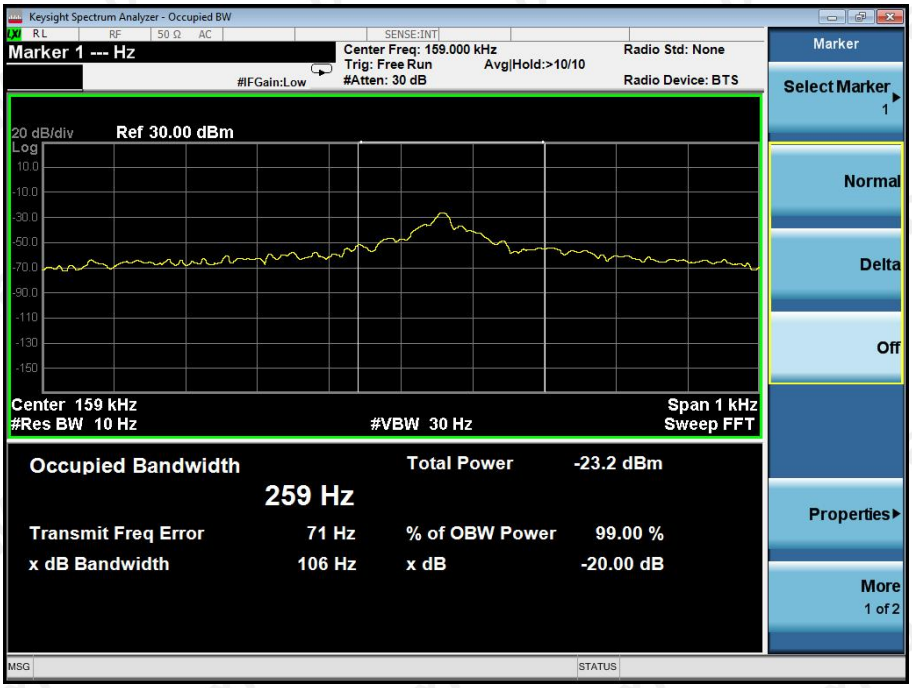

# 6.POWER LINE CONDUCTED EMISSION MEASUREMENT

## 6.1.Block Diagram of Test Setup

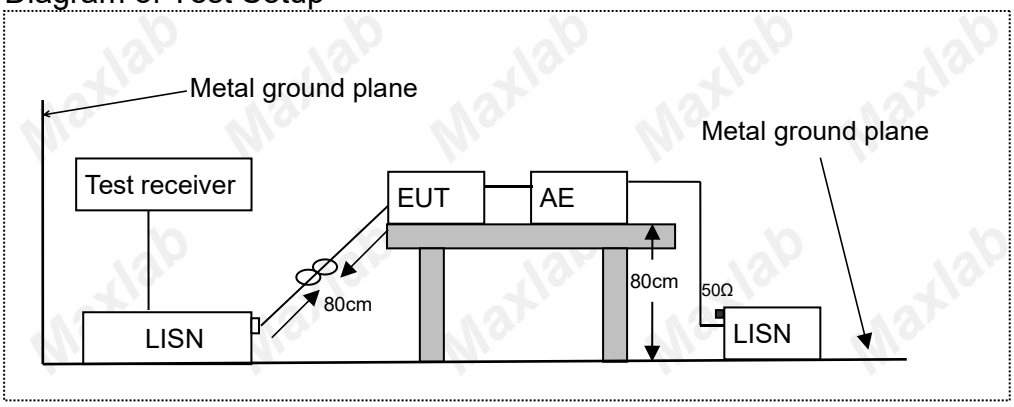


LISN: Line Impedance Stabilization Network
AE: Associated equipment
EUT: Equipment under test

## 6.2.Limits

FCC Part 15.207

| Frequency (MHz) | | | Limit (dBμV) | |
|---|---|---|---|---|
| | | | Quasi-peak Level | Average Level |
| 0.15 | ~ | 0.50 | 66.0 ~ 56.0 * | 56.0 ~ 46.0 * |
| 0.50 | ~ | 5.00 | 56.0 | 46.0 |
| 5.00 | ~ | 30.00 | 60.0 | 50.0 |
| NOTE1-The lower limit shall apply at the transition frequencies.<br>NOTE2-The limit decreases linearly with the logarithm of the frequency in the range 0.15MHz to 0.50MHz. | | | | |

## 6.3.Test Procedure

The EUT was placed on a desk 0.8 m height from the metal ground plane and 0.4 m from the conducting wall of the shielding room and it was kept at least 0.8 m from any other grounded conducting surface. The size of the table will nominally be 1.5 m x1.0 m.

The rear of the arrangement shall be flush with the back of the supporting tabletop unless that would not be possible or typical of normal use.

All units of equipment forming the system under test (includes the EUT as well as connected peripherals and associated equipment or devices) shall be arranged such that a nominal 0.1 m separation is achieved between the neighboring units.

Connect EUT to the power mains through a line impedance stabilization network (LISN). Where the mains cable supplied by the manufacturer is longer than 1 m, the excess should be folded at the centre into a bundle no longer than 0.4 m, so that its length is shortened to 1 m.

All the support units are connecting to the other LISN.

The LISN provides 50 ohm coupling impedance for the measuring instrument.

Both sides of AC line were checked for maximum conducted interference.

The frequency range from 150 kHz to 30 MHz was sweep.

Set the test-receiver system to quasi peak detect function and average detect function, and to measure the conducted emissions values.

Test results were obtained from the following equation:
Emission Level (dBμV) = LISN Factor (dB) + Cable Loss (dB) + Reading (dBμV)
Margin (dB) = Emission Level (dBμV) - Limit (dBμV)

## 6.4.Measuring Results

PASS.

| | | | |
|---|---|---|---|
| Temperature: | 26℃ | Relative Humidity: | 54% |
| Pressure: | 101kPa | Phase : | L |
| Test Voltage : | AC 120V/60Hz | Mode: | Mode 1 |

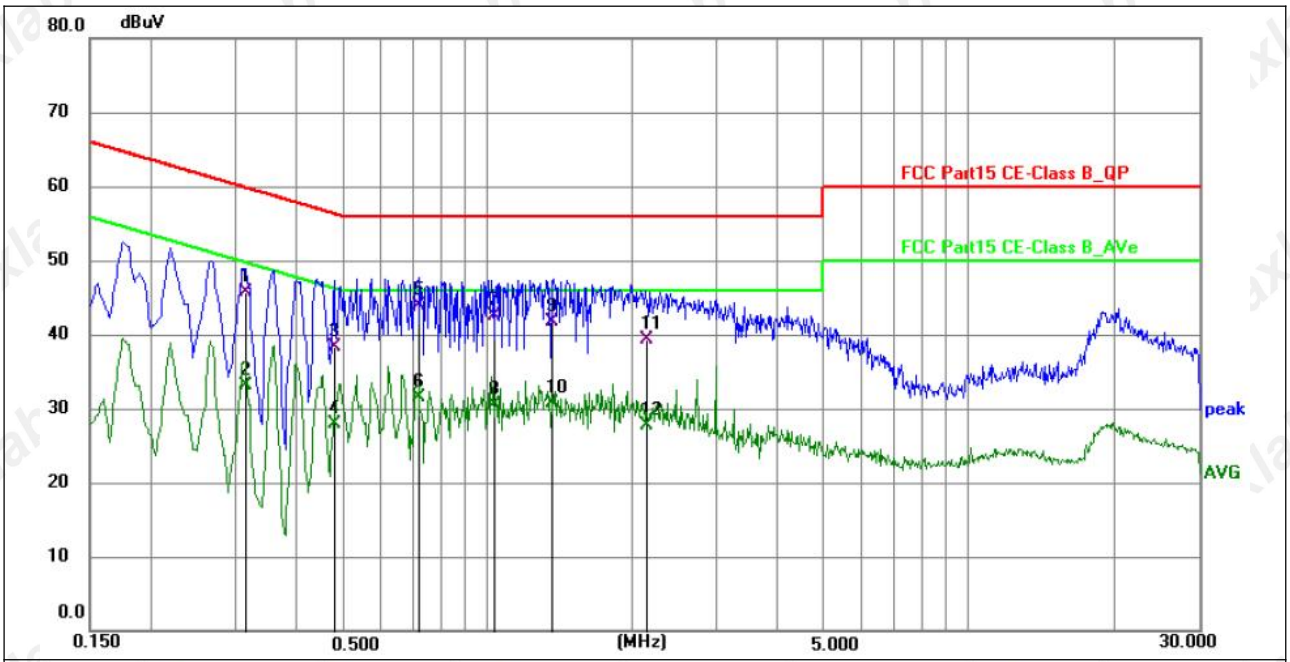


| No. | Frequency (MHz) | Reading (dBuV) | Factor (dB) | Level (dBuV) | Limit (dBuV) | Margin (dB) | Detector |
|---|---|---|---|---|---|---|---|
| 1 | 0.3178 | 26.28 | 19.49 | 45.77 | 59.76 | -13.99 | QP |
| 2 | 0.3178 | 13.65 | 19.49 | 33.14 | 49.76 | -16.62 | AVG |
| 3 | 0.4802 | 18.84 | 19.48 | 38.32 | 56.34 | -18.02 | QP |
| 4 | 0.4802 | 8.50 | 19.48 | 27.98 | 46.34 | -18.36 | AVG |
| 5 * | 0.7245 | 24.35 | 19.49 | 43.84 | 56.00 | -12.16 | QP |
| 6 | 0.7245 | 11.92 | 19.49 | 31.41 | 46.00 | -14.59 | AVG |
| 7 | 1.0420 | 23.00 | 19.50 | 42.50 | 56.00 | -13.50 | QP |
| 8 | 1.0420 | 10.93 | 19.50 | 30.43 | 46.00 | -15.57 | AVG |
| 9 | 1.3748 | 22.25 | 19.51 | 41.76 | 56.00 | -14.24 | QP |
| 10 | 1.3748 | 11.17 | 19.51 | 30.68 | 46.00 | -15.32 | AVG |
| 11 | 2.1499 | 19.82 | 19.54 | 39.36 | 56.00 | -16.64 | QP |
| 12 | 2.1499 | 8.24 | 19.54 | 27.78 | 46.00 | -18.22 | AVG |

Notes:
1.An initial pre-scan was performed on the line and neutral lines with peak detector.
2.Quasi-Peak and Average measurement were performed at the frequencies with maximized peak emission.
3.Mesurement Level = Reading level + Correct Factor

| | | | |
|---|---|---|---|
| Temperature: | 26℃ | Relative Humidity: | 54% |
| Pressure: | 101kPa | Phase : | N |
| Test Voltage : | AC 120V/60Hz | Mode: | Mode 1 |

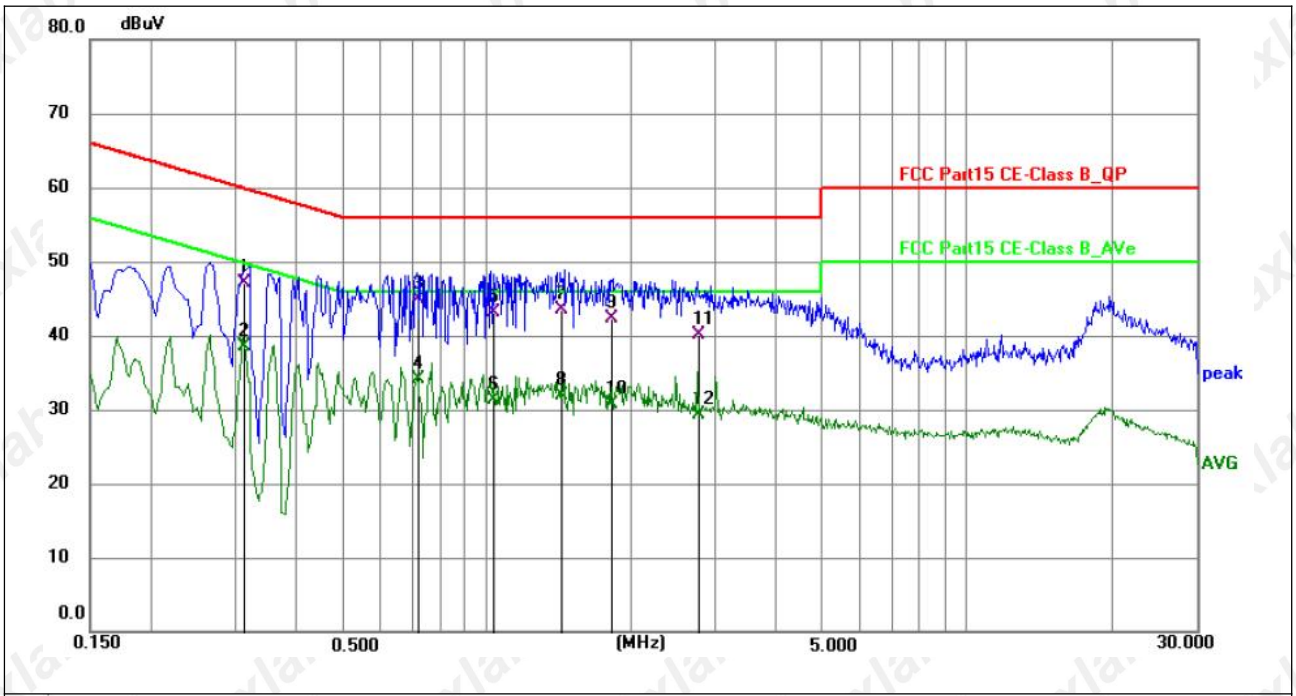


| No. | Frequency (MHz) | Reading (dBuV) | Factor (dB) | Level (dBuV) | Limit (dBuV) | Margin (dB) | Detector |
|---|---|---|---|---|---|---|---|
| 1 | 0.3133 | 27.57 | 19.48 | 47.05 | 59.88 | -12.83 | QP |
| 2 | 0.3133 | 18.95 | 19.48 | 38.43 | 49.88 | -11.45 | AVG |
| 3 * | 0.7217 | 25.37 | 19.50 | 44.87 | 56.00 | -11.13 | QP |
| 4 | 0.7217 | 14.55 | 19.50 | 34.05 | 46.00 | -11.95 | AVG |
| 5 | 1.0412 | 23.50 | 19.51 | 43.01 | 56.00 | -12.99 | QP |
| 6 | 1.0412 | 11.78 | 19.51 | 31.29 | 46.00 | -14.71 | AVG |
| 7 | 1.4401 | 23.89 | 19.52 | 43.41 | 56.00 | -12.59 | QP |
| 8 | 1.4401 | 12.44 | 19.52 | 31.96 | 46.00 | -14.04 | AVG |
| 9 | 1.8206 | 22.84 | 19.55 | 42.39 | 56.00 | -13.61 | QP |
| 10 | 1.8206 | 11.20 | 19.55 | 30.75 | 46.00 | -15.25 | AVG |
| 11 | 2.7733 | 20.45 | 19.56 | 40.01 | 56.00 | -15.99 | QP |
| 12 | 2.7733 | 9.76 | 19.56 | 29.32 | 46.00 | -16.68 | AVG |

Notes:
1.An initial pre-scan was performed on the line and neutral lines with peak detector.
2.Quasi-Peak and Average measurement were performed at the frequencies with maximized peak emission.
3.Mesurement Level = Reading level + Correct Factor

# 7.RADIATED EMISSION TEST

## 7.1.Measurement Procedure

1. The EUT was placed on a turn table which is 0.8m above ground plane.
2. Maximum procedure was performed on the six highest emissions to ensure EUT compliance.
3. And also, each emission was to be maximized by changing the polarization of receiving antenna both horizontal and vertical.
4. Repeat above procedures until all frequency measured were complete.
5. Use the following receiver/spectrum analyzer settings:
   Span = wide enough to fully capture the emission being measured
   RBW=200Hz for 9KHz to 150KHz,
   RBW=9kHz for 150KHz to 30MHz,
   RBW=120KHz for 30MHz to 1GHz
   VBW ≥ 3*RBW
   Sweep = auto
   Detector function = QP
   Trace = max hold

## 7.2.Test SET-UP (Block Diagram of Configuration)

(A) Radiated Emission Test Set-Up, Frequency Below 30MHz

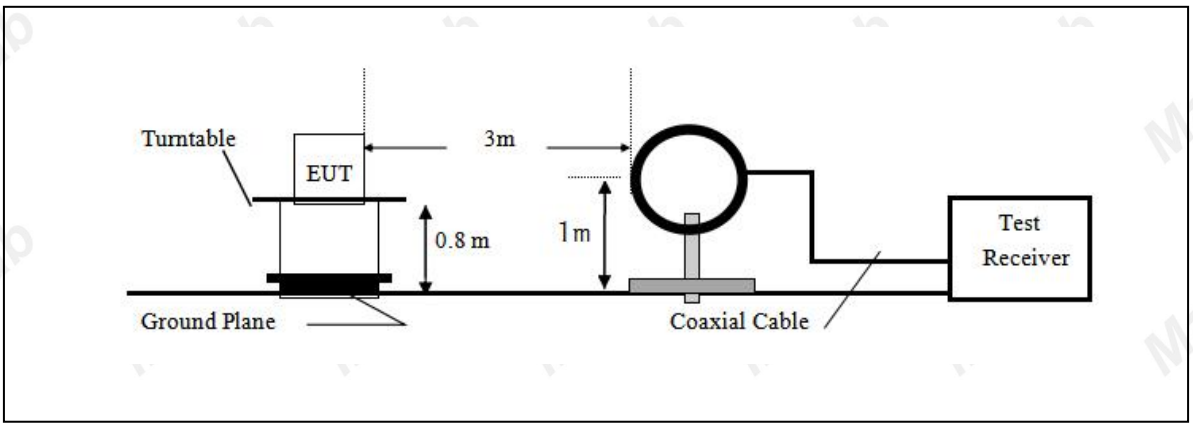


(B) Radiated Emission Test Set-Up, Frequency Below 1000MHz

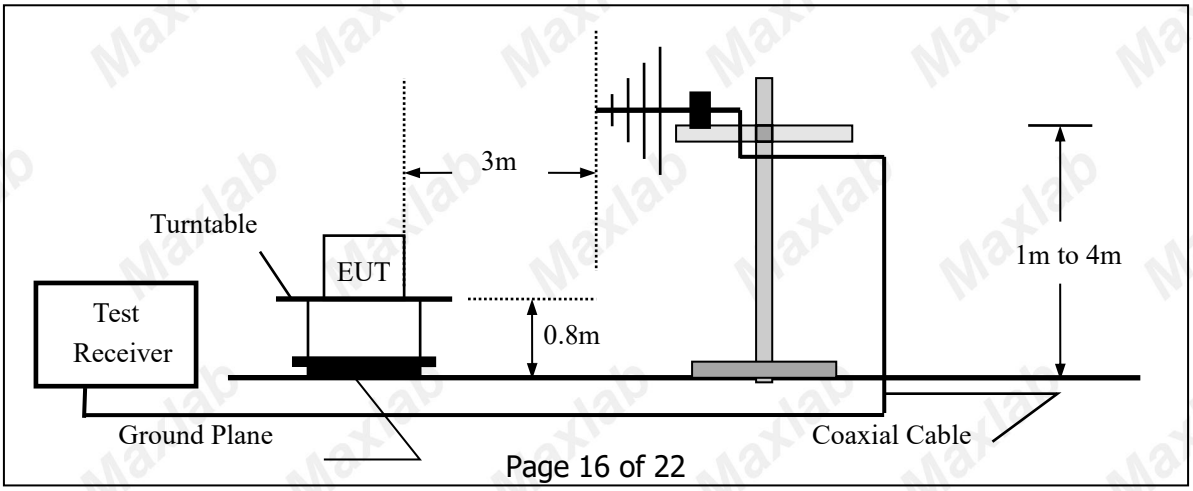

## 7.3.Radiated Emission Limit

The emissions from an intentional radiator shall not exceed the field strength levels specified in the following table 15.209(a):

| FCC Part 15.209 | | | | |
|---|---|---|---|---|
| Frequency (MHz) | Field Strength Limitation | | Field Strength Limitation Frequency tion at 3m Measurement Dist | |
| | (uV/m) | Dist | (uV/m) | (dBuV/m) |
| 0.009 – 0.490 | 2400 / F(KHz) | 300m | 10000 * 2400/F(KHz) | 20log 2400/F(KHz) + 80 |
| 0.490 – 1.705 | 24000 / F(KHz) | 30m | 100 * 24000/F(KHz) | 20log 24000/F(KHz) + 40 |
| 1.705 – 30.00 | 30 | 30m | 100* 30 | 20log 30 + 40 |
| 30.0 – 88.0 | 100 | 3m | 100 | 20log 100 |
| 88.0 – 216.0 | 150 | 3m | 150 | 20log 150 |
| 216.0 – 960.0 | 200 | 3m | 200 | 20log 200 |
| Above 960.0 | 500 | 3m | 500 | 20log 500 |

## 15.205 Restricted bands of operation

| MHz | MHz | MHz | GHz |
|---|---|---|---|
| 0.090 - 0.110 | 16.42 - 16.423 | 399.9 - 410 | 4.5 - 5.15 |
| [1]0.495 - 0.505 | 16.69475 - 16.69525 | 608 - 614 | 5.35 - 5.46 |
| 2.1735 - 2.1905 | 16.80425 - 16.80475 | 960 - 1240 | 7.25 - 7.75 |
| 4.125 - 4.128 | 25.5 - 25.67 | 1300 - 1427 | 8.025 - 8.5 |
| 4.17725 - 4.17775 | 37.5 - 38.25 | 1435 - 1626.5 | 9.0 - 9.2 |
| 4.20725 - 4.20775 | 73 - 74.6 | 1645.5 - 1646.5 | 9.3 - 9.5 |
| 6.215 - 6.218 | 74.8 - 75.2 | 1660 - 1710 | 10.6 - 12.7 |
| 6.26775 - 6.26825 | 108 - 121.94 | 1718.8 - 1722.2 | 13.25 - 13.4 |
| 6.31175 - 6.31225 | 123 - 138 | 2200 - 2300 | 14.47 - 14.5 |
| 8.291 - 8.294 | 149.9 - 150.05 | 2310 - 2390 | 15.35 - 16.2 |
| 8.362 - 8.366 | 156.52475 - 156.52525 | 2483.5 - 2500 | 17.7 - 21.4 |
| 8.37625 - 8.38675 | 156.7 - 156.9 | 2690 - 2900 | 22.01 - 23.12 |
| 8.41425 - 8.41475 | 162.0125 - 167.17 | 3260 - 3267 | 23.6 - 24.0 |
| 12.29 - 12.293 | 167.72 - 173.2 | 3332 - 3339 | 31.2 - 31.8 |
| 12.51975 - 12.52025 | 240 - 285 | 3345.8 - 3358 | 36.43 - 36.5 |
| 12.57675 - 12.57725 | 322 - 335.4 | 3600 - 4400 | ([2]) |

Remark: 1. Emission level in dBuV/m=20 log (uV/m)
2. Measurement was performed at an antenna to the closed point of EUT distance of meters.
3. Only spurious frequency is permitted to locate within the Restricted Bands specified in provision of ξ 15.205, and the emissions located in restricted bands also comply with 15.209 limit.

## 7.4.Measurement Result

Measurement data:

Note: Limit dBuV/m @3m = Limit dBuV/m @300m+ 80
Limit dBuV/m @3m = Limit dBuV/m @30m + 40

9 kHz~30 MHz

| | | | |
|---|---|---|---|
| Temperature: | 26℃ | Relative Humidity: | 54% |
| Pressure: | 101kPa | Pol. | Coplanar |
| Test Voltage ： | DC 3.85V | Mode: | Mode 1 |

| Frequency (kHz) | Meter Reading (dBμV/m) | Factor (dB/m) | Emission Level (dBμV/m) | Limits (dBμV/m) | Margin (dB) | Detector Type |
|---|---|---|---|---|---|---|
| 159 | 77.67 | 20.30 | 97.97 | 123.58 | -25.61 | peak |
| 159 | 62.47 | 20.33 | 82.80 | 103.58 | -20.77 | AV |
| 216.24 | 66.75 | 20.27 | 87.02 | 120.91 | -33.96 | peak |
| 216.24 | 54.38 | 20.26 | 74.64 | 100.91 | -26.27 | AV |
| 324.47 | 63.59 | 20.04 | 83.63 | 117.38 | -33.70 | peak |
| 324.47 | 47.30 | 20.04 | 67.33 | 97.38 | -30.01 | AV |
| 1416.22 | 27.83 | 20.61 | 48.45 | 64.58 | -16.22 | QP |
| 4119.42 | 24.62 | 21.43 | 46.05 | 69.54 | -23.54 | QP |
| 5524.84 | 23.06 | 22.16 | 45.22 | 69.54 | -24.36 | QP |

Note:
Pre-scan in the all of mode, the worst case in of was recorded.
Factor = antenna factor + cable loss – pre-amplifier.
Margin = Emission Level- Limit.

| | | | |
|---|---|---|---|
| Temperature: | 26℃ | Relative Humidity: | 54% |
| Pressure: | 101kPa | Pol. | Coaxial |
| Test Voltage : | DC 3.85V | Mode: | Mode 1 |

| Frequency (kHz) | Meter Reading (dBμV/m) | Factor (dB/m) | Emission Level (dBμV/m) | Limits (dBμV/m) | Margin (dB) | Detector Type |
|---|---|---|---|---|---|---|
| 159 | 80.56 | 20.33 | 100.89 | 123.58 | -22.69 | peak |
| 159 | 65.23 | 20.33 | 85.56 | 103.58 | -18.02 | AV |
| 238.1 | 66.87 | 20.25 | 87.12 | 117.47 | -30.35 | peak |
| 238.1 | 51.66 | 20.25 | 71.91 | 97.47 | -25.56 | AV |
| 458.5 | 67.19 | 20.24 | 87.43 | 114.38 | -26.95 | peak |
| 458.5 | 53.88 | 20.24 | 74.12 | 94.38 | -20.26 | AV |
| 1415.33 | 34.03 | 20.55 | 54.58 | 73.6 | -19.02 | QP |
| 4118.74 | 29.78 | 21.1 | 50.88 | 69.54 | -18.66 | QP |
| 5523.91 | 26.36 | 22.02 | 48.38 | 69.54 | -21.16 | QP |

30MHz-1GHz:

| | | | |
|---|---|---|---|
| Temperature: | 26℃ | Relative Humidity: | 54% |
| Pressure: | 101 kPa | Polarization: | Horizontal |
| Test Voltage: | DC 3.85V | Mode: | Mode 1 |

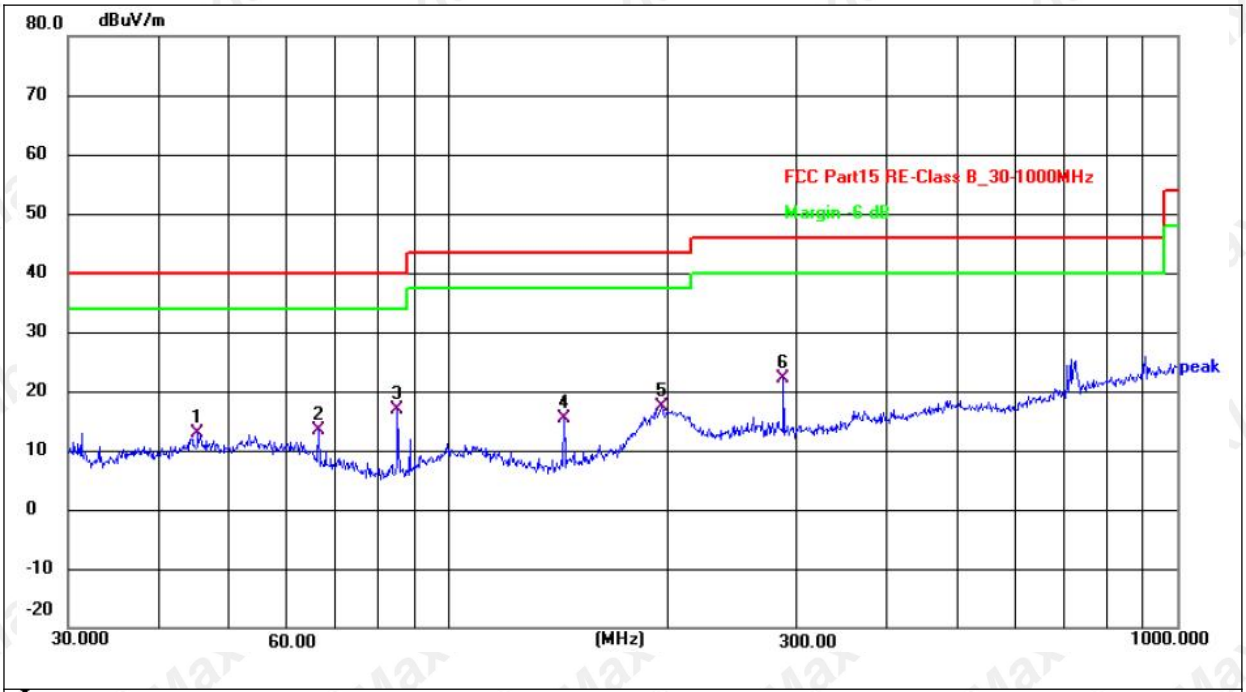


| No. | Frequency (MHz) | Reading (dBuV) | Factor (dB/m) | Level (dBuV/m) | Limit (dBuV/m) | Margin (dB) | Detector |
|---|---|---|---|---|---|---|---|
| 1 | 45.2166 | 27.15 | -14.32 | 12.83 | 40.00 | -27.17 | QP |
| 2 | 66.2661 | 30.30 | -16.95 | 13.35 | 40.00 | -26.65 | QP |
| 3 | 84.9995 | 36.10 | -19.17 | 16.93 | 40.00 | -23.07 | QP |
| 4 | 143.8295 | 34.76 | -19.38 | 15.38 | 43.50 | -28.12 | QP |
| 5 | 195.8220 | 33.99 | -16.62 | 17.37 | 43.50 | -26.13 | QP |
| 6 | 287.9904 | 35.83 | -13.72 | 22.11 | 46.00 | -23.89 | QP |

| | | | |
|---|---|---|---|
| Temperature: | 26℃ | Relative Humidity: | 54% |
| Pressure: | 101 kPa | Polarization: | Vertical |
| Test Voltage: | DC 3.85V | Mode: | Mode 1 |

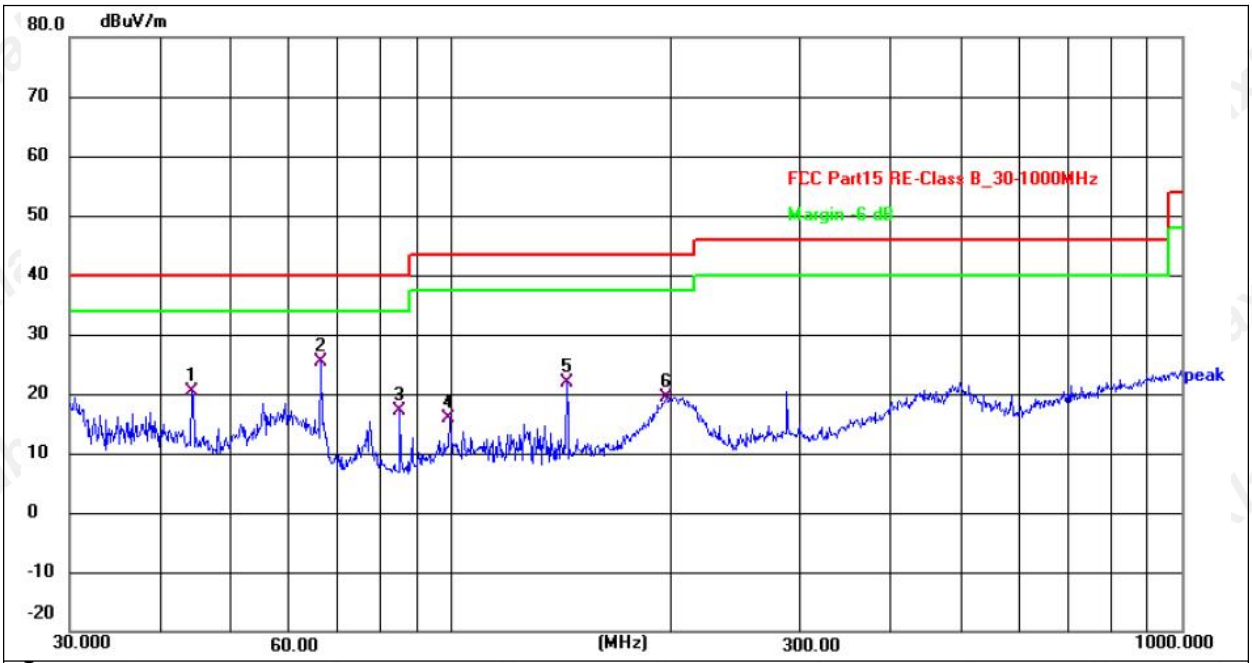


| No. | Frequency (MHz) | Reading (dBuV) | Factor (dB/m) | Level (dBuV/m) | Limit (dBuV/m) | Margin (dB) | Detector |
|---|---|---|---|---|---|---|---|
| 1 | 44.1202 | 34.93 | -14.45 | 20.48 | 40.00 | -19.52 | QP |
| 2 | 66.2662 | 42.42 | -16.95 | 25.47 | 40.00 | -14.53 | QP |
| 3 | 84.9993 | 36.34 | -19.17 | 17.17 | 40.00 | -22.83 | QP |
| 4 | 99.5279 | 32.00 | -16.00 | 16.00 | 43.50 | -27.50 | QP |
| 5 | 143.8295 | 41.17 | -19.38 | 21.79 | 43.50 | -21.71 | QP |
| 6 | 197.2000 | 36.03 | -16.56 | 19.47 | 43.50 | -24.03 | QP |

Remarks:
1.Final Level =Receiver Read level + Antenna Factor + Cable Loss – Preamplifier Factor
2.The emission levels of other frequencies are very lower than the limit and not show in test report.

# 8.TEST PHOTOGRAPHS AND EUT PHOTOGRAPHS

Please the attachment for details.

----------The end----------