MINI PRINTER

User's manual

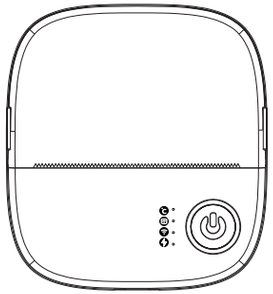

Please read this manual carefully before using this product and keep it properly.

Pre-use notes:

Please use the device correctly according to the description in this manual.

Product functions

This product is mainly used to print various labels/photos/notes/learning materials, etc.to help you classify, mark, identify, etc.items.It can be used in a variety of scenarios such as home storage, office, learning, etc., making your daily life more convenient and adding a lot of fun!

product configuration

Thermal printer, USB cable, a roll of printing paper (depending on the difference in the product set, the printing paper contained in the package will be different,subject to the actual purchased set),a product user manual.

Notes on charging

Please charge it before using for the first time.

It is recommended to use an adapter that has obtained a CCC certification certificate to charge.If a charger with non-adapt parameters (5V1A) is used for charging, it may cause damage to the product.

Appearance description

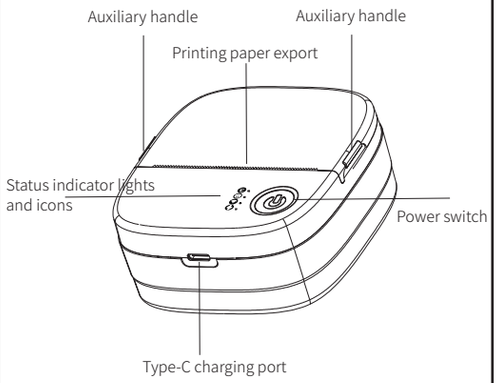

User Guide:

❶ Please charge it before using for the first time.
When using, please disconnect the charger and press the power button for 3 seconds to turn on/off.

❷ **App download**

You can choose any one of the following three methods to download.

1.**iOS users:** Open the "App Store" and search for "funny print" to download it.

Android users: Open "Google Play" and search for "funny print" to download it.

2.Turning on the device double - click the power button, Scan the QR code on the paper to download the APP .

3.Scan the QR code on the right to download.

❸ Make sure that the Bluetooth of the mobilephone is turned on and click into the APP,Click "+ Add Device" in the upper leftcorner of "Home Page" to select thecorresponding device to connect.After theconnection is successful, it can be printed.

Power Indicator Status:

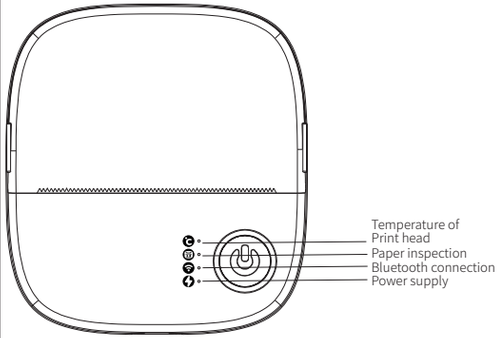

Temperature of print head:	If the print head temperature is normal, the corresponding indicator light remains constantly on. Otherwise, the light will flash. If the indicator light flashes, wait until the temperature drops before resuming use.
Paper inspection:	When there is paper in the paper bin, the indicator light remains constantly on. Conversely, if there is no paper, it flashes.
Bluetooth connection:	When the Bluetooth connection is successful, the indicator light stays constantly on. Conversely, if the connection fails, it flashes.
Power Supply:	The indicator light remains constantly on when the device is in normal startup state.

questions and solutions:

Question	Solution
The printing is not clear	Check whether the print head is clean/check whether the printing papelis compatible with the printer/adiust the print concentration and other parameters.
The print is blank or missing	Check whether the label paper is installed correctlythere is a paper jamCheck whether the print head is damaged. If necessary, replace the printhead.
Bluetooth can't be connected	Check whether Bluetooth is turned on/check whether other printers are connected
Unable to turn on	Check whether the printer is low and charged in time.

Change the paper:

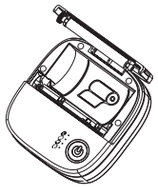

❶ Hold the auxiliary handles on the left and right sides and lift up to open the top cover of the device.

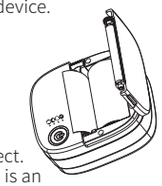

❷ Put the thermal paper into the paper magazine and make sure that the direction of the thermal paper is correct. Pay attention not to be skewed (there is an icon of the direction of the paper roll placementin the warehouse).If the paper is placed in the wrong direction, it will not be printed.

❸ The installed thermal paper needs to show the length of about 2 cm in the paper magazine.When the paper roll is installed, the machine can automatically absorb the paper.After installing it according to the above steps, it can be printed normally.

Maintenance and upkeep:

Cleaning labeling machine

Regularly use a clean soft cloth or cotton swab to gently wipe the surface of the labeling machine to remove dust and stains.Be careful not to use wet cloths or corrosive detergents to avoid damaging the shell and internal parts of the labeling machine.

Replace the printing paper

When the thermal paper is used up or different types of thermal paper need to be replaced, follow the steps to install the thermal paper to replace it.

Make sure that the new paper roll is compatible with the labeling machine and installed correctly.It is recommended to purchase suitable printing paper on the official website.

Maintain the print head

The print head of this device is a thermal print head to avoid continuous printing for a long time, so as to avoid overheating and damage to the print head.

Regularly check whether the print head is dirty or damaged. If so use a special cleaning tool or cotton swab to gently wipe the printhead.Be careful not to use too much force to avoid damaging theprint head.

Safety precautions:

1.Do not disassemble the internal parts of the printer at will to avoid safety accidents.

2.During the working process of the printer, do not touch the print head to prevent burns.

3. In order to avoid danger, please do not use the printer in humid, high-temperature,flammable and explosive environments.For example,the bathroom,next to the stove, etc.

4. Place the printer in a place where children are not easy to touch to avoid the danger caused by children pressing the buttorby mistake, plugging and unplugging the power supply at will orplaying with the label paper.

5.Please use the original charger or a regular charger that meets the charging parameters of this device to charge.

6.During use or charging, if you find that the battery is abnormally hot, you should stop using it immediately and disconnect the power supply.

7.Please recycle waste batteries properly in accordance with local environmental protection regulations, and do not throw them away at will.

FCC warnings:

This equipment has been tested and found to comply with the limits for a Class B digital device,pursuant to part 15 of the FCC Rules. These limits are designed to provide reasonable protection againstharmful interference in a residential installation. This equipment generates, uses and can radiateradio frequency energy and, if not installed and used in accordance with the instructions, maycause harmful interference to radio communications. However, there is no guarantee thatinterference will not occur in a particular installation. If this equipment does cause harmfulinterference to radio or television reception, which can be determined by turning the equipmentoff and on, the user is encouraged to try to correct the interference by one or more of thefollowing measures:

• Reorient or relocate the receiving antenna.
• Increase the separation between the equipment and receiver.
• Connect the equipment into an outlet on a circuit different from that to which the receiver is connected.
• Consult the dealer or an experienced radio/TV technician for help.

Caution: Any changes or modifications to this device not explicitly approved by manufacturer could void your authority to operate this equipment.

This device complies with part 15 of the FCC Rules. Operation is subject to the following two conditions:

(1)This device may not cause harmful interference, and (2) this device must accept any interference received, including interference that may cause undesired operation.

This equipment complies with FCC radiation exposure limits set forth for an uncontrolled environment. This equipment should be installed and operated with minimum distance 0cm between the radiator and your body.