GnK Solutions

GNK553-A
DataSheet

Revision 1.3

Dec.2025

Important Notice

All module data in this manual are from the results of laboratory tests of GNK Co.,Ltd. and are for reference only and do not represent the actual results , and GNK Co.,Ltd. does not assume any warranty responsibility for the operation and use of any data , content statements and other information in this manual (including , but not limited to, any infringement of the risk of liability and responsibility arising from the use of the information in this manual, etc.);

GNK Co.,Ltd,reserves the right to make any modifications and additions to the contents of the manual according to the product versions and changes in the actual situation without further notice;

Intellectual property rights such as trade names , trademarks , registered trademarks , etc. mentioned in this manual belong to their respective right holders , and no one can use them without authorization from the right holders;

The final interpretation of this manual belongs to GNK Co.,Ltd.

Revision Histoty

Version	Revision Date	Author	Description
V1.0	2023/10/18	luo	Initial Version
V1.1	2023/12/08	luo	Optimized RF data and reference circuitry
V1.2	2024/12/16	luo	Mini Version
V1.3	2025/01/07	luo	Antenna Maching Value Change

Table of Contents

Important Notice 1
Revision Histoty 2
1.Product Overview 4
2.Electrical Characteristics 6
2.1 Basic Parameters 6
2.2 BLE RF Parameters 6
2.3 WiFi RF Parameters 7
2.3.1 Supported Frequencies 7
2.3.2 WiFi Power consumption characteristics 7
2.3.3 Transmitter Characteristics 8
2.3.4 Receiver Characteristics 8
3.WKV553-A Module 9
3.1 Pin Functions 9
3.2 Mechanical Specifications 14
3.3 Schematic 15
3.4 Layout recommendation 16
3.5 design direction 16
3.5.1 Application Diagram 16
3.5.2 On-Board Antenna Placement Requirements 17
4.Thermal Reflow 18
5.Contact Us 19

1.Product Overview

WKV553-A is an integrated Wi-Fi6+BLE 5.2 combo module developed by GNK Co.,Ltd;

The module is equipped with a GD32VW553 chip from GigaDevice Semiconductor Inc, The GD32VW553xx device incorporates the RISC-V 32-bit processor core operating at 160 MHz frequency to obtain maximum efficiency. It provides up to 4096 KB on-chip Flash memory and 320KB (288 KB + 32KB Shared) SRAM memory. An extensive range of enhanced I/Os and peripherals connect to two APB buses. The devices offer a 12-bit ADCs, up to four general 16-bit timers, one basic timers, one PWM advanced timer, as well as standard and advanced communication interfaces: one SPI, two I2Cs, one USARTs, two UARTs, a Wireless (BLE / Wi-Fi). Additional peripherals as cryptographic acceleration unit (CAU), hash acceleration unit (HAU), public key cryptographic acceleration unit (PKCAU) and quad-SPI interface (QSPI) are included.

WKV553-A module is suitable for a wide range of applications, especially such as in embedded systems, smart home, industrial interconnection, consumer and handheld devices, e-bikes, IoT devices, communication gateways and many other wireless application scenarios.

The block diagram of the chip is shown below:

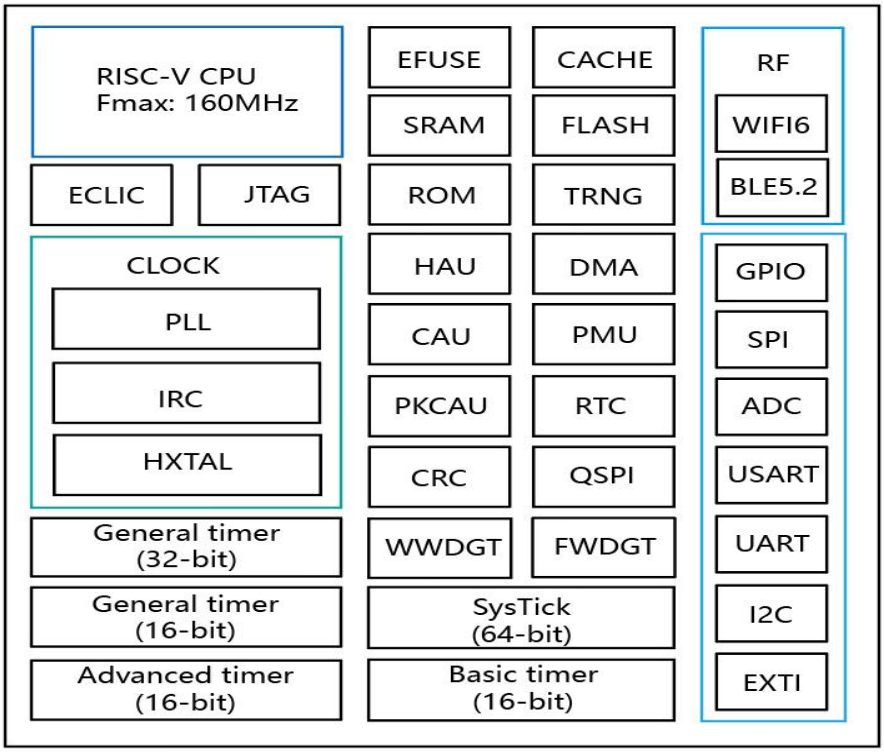

Features:

- MCU
  - RISC-V 32-bit processor
  - Up to 160 MHz operation frequency
  - Up to 4096 KB on-chip Flash memory
  - 320KB (288 KB + 32KB Shared) SRAM memory

- WIFI
  - Support Wi-Fi 2.4GHz IEEE802.11b/g/n/ax
  - Support 802.11e QoS Enhancement (WMM)
  - Support 802.11i (WPA, WPA2, WPA3). Open, shared key, and pair-wise key authentication services
  - Support Wi-Fi WPS
  - Support Wi-Fi Direct
  - Support Integrated TCP / IP protocol.
  - Support Target Wake up Time (TWT) operation
  - Support Multiple BSSID operation
  - Support OFDMA-based random access
  - Support Transmission and reception of aggregated MPDUs (A-MPDU) for high throughput
  - Support Support for immediate ACK and Block-ACK policies

- BLE
  - Support BLE 5.2
  - Support High speed 2M PHY
  - Support Long range coded PHY
  - Support Data rate: 250, 500, 1000 and 2000kbps

- Advanced Peripheral Interfaces
  - 1 x 12-bit ADC
  - 1 x SPI
  - 1 x QSPI
  - 2 x I2C
  - 1 x USART
  - 2 x UART
  - Wireless (BLE / Wi-Fi)
  - 2 x 32-bit general-purpose timer
  - 2 x 16-bit genera-purpose timer
  - 1 x 16-bit basic timer
  - 1 x 16-bit advanced-contol timer
  - Cryptographic Acceleration Unit(CAU)
  - Hash Acceleration Unit(HAU)
  - Public Key Cryptographic Acceleration Unit(PKCAU)
  - True Random Number Generator(TRNG)

2.Electrical Characteristics

2.1 Basic Parameters

Symbol	Parameter	Min.	Max.	Unit
V_{DD}	External voltage range	-0.3	3.6	V
V_{DDA}	External analog supply voltage	-0.3	3.6	V
AVDD33_ANA	RF Analog voltage	- 0.3	3.6	℃
AVDD33_PA	RF PA voltage	- 0.3	3.6	V
AVDD33_CLK	RF Clock voltage	- 0.3	3.6	V
V_{IN}	Input voltage on 5V tolerant pin	- 0.3	V_{DD}+3.6	V
	Input voltage on other I/O	- 0.3	3.6	V
$\lvert \Delta V_{DDx} \rvert$	Variations between different VDD power pins	—	50	mV
I_{IO}	Maximum current for GPIO pin	—	±25	mA
T_{opr}	Operating temperature range	-40	+105	℃
T_{STG}	Storage temperature range	-65	+150	℃
T_J	Maximum junction temperature	—	125	℃

2.2 BLE RF Parameters

Symbol	Consumption			Unit
Frequency Range	2400~2483.5			MHz
TX power				
Rate mode	Min.	Typ	Max.	Unit
1M	-30	5	15	dBm
2M	-30	5	15	dBm
RX Sensitivity				
Rate mode	Min.	Typ	Max.	Unit
1M	—	-100.5	—	dBm
2M	—	-97.5	—	dBm

2.3 WiFi RF Parameters

2.3.1 Supported Frequencies

Feature	Description
WLAN Standard	IEEE 802.11 b/g/n/ax WiFi compliant
Frequency Range	2.400 GHz~ 2.4835GHz (2.4 GHz ISM Band)
Number of Channels	2.4GHz :Ch1~Ch13

2.3.2 WiFi Power consumption characteristics

Power Mode	Description	Consumption	Unit
Active	Wi-Fi Tx 802.11n, HT 20M MCS0, Pout = +18dBm(1)	316	mA
	Wi-Fi Tx 802.11n, HT 20M MCS7, Pout = +14dBm(1)	275	mA
	Wi-Fi Tx 802.11ax, HE 20M MCS0, Pout = +18dBm(1)	316	mA
	Wi-Fi Tx 802.11ax, HE 20M MCS9, Pout = +12dBm(1)	265	mA
	Wi-Fi Rx 802.11b, CCK 1Mbps, -90dBm(2)	99	mA
	Wi-Fi Rx 802.11b, CCK 11Mbps, -80Bm(2)	100	mA
	Wi-Fi Rx 802.11g, OFDM 6Mbps, -80dBm(2)	101	mA
	Wi-Fi Rx 802.11g, OFDM 54Mbps, -70dBm(2)	102	mA
	Wi-Fi Rx 802.11n, HT 20M MCS0, -75dBm(2)	100	mA
	Wi-Fi Rx 802.11n, HT 20M MCS7, -65dBm(2)	103	mA
	Wi-Fi Rx 802.11ax, HE 20M MCS0, -75dBm(2)	101	mA
	Wi-Fi Rx 802.11ax, HE 20M MCS9, -60dBm(2)	107	mA
Wi-Fi Sleep	MCU in Run mode(3)	37.6	mA
Mild Sleep(4)	DTIM=1	1.4	mA
	DTIM=3	0.55	mA
	DTIM=10	0.31	mA
Hibernation	MCU in Standby mode(5)	—	μA
Shutdown	—	—	mA

(1)Continuous Tx, Duty cycle = 100%

(2)Rx Packet Length = 1024 Bytes.

(3)VDD = VDDA = 3.3 V, HXTAL = 40 MHz, System clock = 160 MHz, all peripherals enabled, except Wi-Fi.

(4)The DTIM power consumption is equal to the average power consumption of multiple beacon intervals.

(5)VDD = VDDA = 3.3 V, LXTAL off, IRC32K on, RTC on

2.3.3 Transmitter Characteristics

Output Power		
Rate	Typical Value(dBm)	EVM(dB)
802.11b/11M	17	≤-23
802.11g/54M	15	≤-33
802.11n/MCS7	14	≤-34.7
802.11ax/MCS9	12	≤-37.2

2.3.4 Receiver Characteristics

reception sensitivity		
Rate	Channel	Sensitivity(dBm)
802.11b/1M	1	-100.5
	7	-100.5
	13	-100.5
802.11b/11M	1	-91.5
	7	-91.5
	13	-91.5
802.11g/6M	1	-95.5
	7	-95
	13	-95
802.11g/54M	1	-79
	7	-79
	13	-78.5
802.11n/MCS0	1	-95
	7	-95
	13	-94.5
802.11n/MCS7	1	-76.5
	7	-76.5
	13	-76.5
802.11ax/MCS0	1	-95
	7	-94.5
	13	-94.5
802.11ax/MCS9	1	-69
	7	-69
	13	-67.5

3.GNK553-A Module

3.1 Pin Functions

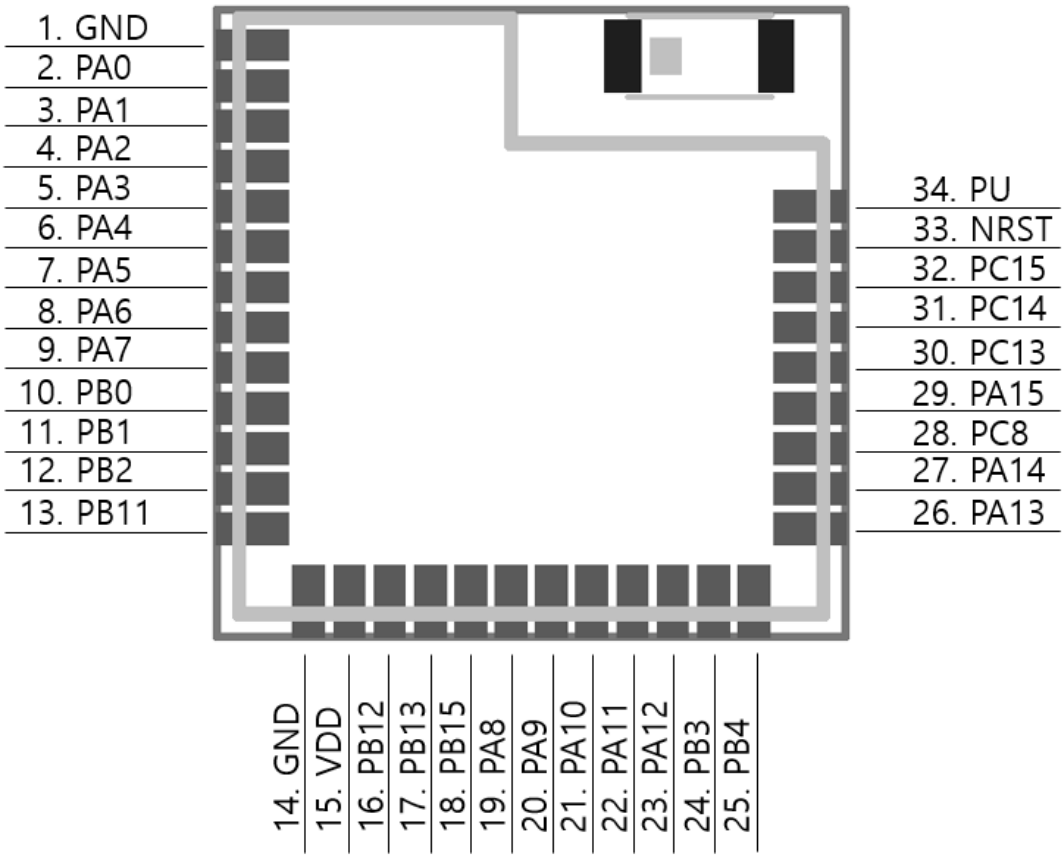

Pin	Name	Type	Description
1	GND	GND	GND
2	PA0	I/O	Default: PA0 Alternate: USART0_TX, TIMER1_CH0, TIMER1_ETI, SPI_MOSI, UART1_CTS, TIMER0_ETI, EVENTOUT Additional: ADC_IN0, WAKEUP0, RTC_TAMP1
3	PA1	I/O	Default: PA1 Alternate: USART0_RX, TIMER1_CH1, SPI_MISO, UART1_RTS, EVENTOUT
4	PA2	I/O	Default: PA2 Alternate: USART0_CTS, TIMER1_CH2, I2C0_SCL, SPI_SCK, TIMER0_CH0, UART1_TX, EVENTOUT
5	PA3	I/O	Default: PA3 Alternate: USART0_RTS, TIMER1_CH3, I2C0_SDA, SPI_NSS, TIMER0_CH0_ON, UART1_RX, RTC_OUT, EVENTOUT Additional: ADC_IN3
6	PA4	I/O	Default: PA4 Alternate: UART1_TX, SPI_MOSI, QSPI_SCK, SPI_NSS, TIMER0_CH1, EVENTOUT Additional: ADC_IN4
7	PA5	I/O	Default: PA5 Alternate: UART1_RX, TIMER2_ETI, QSPI_CSN, SPI_MISO, SPI_SCK, TIMER0_CH1_ON , EVENTOUT Additional: ADC_IN5
8	PA6	I/O	Default: PA6 Alternate: TIMER2_CH0, QSPI_IO0, I2C1_SCL, SPI_MISO, SPI_SCK, TIMER0_CH1, TIMER1_CH1, UART2_TX, EVENTOUT Additional: ADC_IN6
9	PA7	I/O	Default: PA7 Alternate: I2C1_SDA, TIMER0_CH0_ON, TIMER2_CH1, QSPI_IO1, SPI_NSS, SPI_MOSI, TIMER0_CH1_ON, UART2_RX, TIMER1_CH2, EVENTOUT Additional: ADC_IN7, WAKEUP2
10	PB0	I/O	Default: PB0 Alternate: TIMER0_CH1_ON, TIMER0_CH0, TIMER0_CH2, UART1_TX, I2C0_SCL, TIMER2_ETI, TIMER16_CH0, UART2_CTS, TIMER0_BRKIN, EVENTOUT Additional: ADC_IN8

11	PB1	I/O	Default: PB1 Alternate: TIMER0_CH2_ON, TIMER0_CH0_ON, TIMER2_CH2, UART1_RX, I2C0_SDA, TIMER16_CH0_ON, UART2_RTS, EVENTOUT Additional: BOOT1
12	PB2	I/O	Default: PB2 Alternate: TIMER1_CH3, TIMER2_CH3, UART1_CTS, TIMER0_ETI, TIMER16_BRKIN, EVENTOUT
13	PB11	I/O	Default: PB11 Alternate: CK_OUT1, TIMER1_CH2, TIMER0_CH1_ON, UART1_RTS, TIMER15_BRKIN, EVENTOUT
14	GND	GND	GND
15	VDD	P	Default: VDD 3.3V
16	PB12	I/O	Default: PB12 Alternate: TIMER0_BRKIN, TIMER0_CH3, TIMER1_CH2, I2C1_SCL, EVENTOUT
17	PB13	I/O	Default: PB13 Alternate: TIMER0_CH0_ON, TIMER1_CH3, I2C1_SDA, TIMER15_CH0, EVENTOUT
18	PB15	I/O	Default: PB15 Alternate: RTC_REFIN, TIMER0_CH2_ON, TIMER2_CH0, I2C0_SCL, I2C1_SCL, UART1_TX, USART0_TX, IFRP_OUT , EVENTOUT
19	PA8	I/O	Default: PA8 Alternate: CK_OUT0, TIMER0_CH0, USART0_RX, UART1_RX, I2C0_SDA, I2C1_SDA, USART0_CK, TIMER15_CH0, RTC_OUT, TIMER0_CH2_ON, EVENTOUT
20	PA9	I/O	Default: PA9 Alternate: SPI_MOSI, TIMER0_CH1, QSPI_SCK, USART0_TX, TIMER15_CH0_ON, EVENTOUT
21	PA10	I/O	Default: PA10 Alternate: SPI_MISO, TIMER0_CH2, QSPI_CSN, TIMER16_CH0, USART0_RX, EVENTOUT
22	PA11	I/O	Default: PA11 Alternate: SPI_SCK, TIMER0_CH3, QSPI_IO0, TIMER16_BRKIN, TIMER1_CH3, EVENTOUT
23	PA12	I/O	Default: PA12 Alternate: TIMER0_ETI, TIMER0_CH3, QSPI_IO1, SPI_NSS, USART0_CK, TIMER1_CH2, TIMER16_CH0_ON, EVENTOUT Additional: WKUP3

Pin	Name	Type	Description
24	PB3	I/O	Default: JTDO, PB3 Alternate: TIMER1_CH1, QSPI_IO2, USART0_RX, UART1_RX, TIMER15_BRKIN, EVENTOUT
25	PB4	I/O	Default: NJTRST, PB4 Alternate: TIMER1_CH0, TIMER1_ETI, QSPI_IO3, USART0_TX, UART1_TX, EVENTOUT
26	PA13	I/O	Default: JTMS, PA13 Alternate: I2C0_SMBA, I2C1_SCL, USART0_CTS, UART1_CTS, EVENTOUT
27	PA14	I/O	Default: JTCK, PA14 Alternate: I2C1_SMBA, I2C1_SDA, USART0_RTS, UART1_RTS, EVENTOUT
28	PC8	I/O	Default: PC8 Alternate: TIMER2_CH2, I2C0_SDA, I2C1_SDA, USART0_TX, UART1_TX, EVENTOUT Additional: BOOT0
29	PA15	I/O	Default: JTDI, PA15 Alternate: TIMER1_CH0, TIMER1_ETI, I2C0_SCL, I2C1_SCL, USART0_RX, UART1_RX, EVENTOUT Additional: WKUP1
30	PC13	I/O	Default: PC13 Alternate: USART0_CK, EVENTOUT Additional: RTC_TAMP_0, RTC_OUT, RTC_TS
31	PC14	I/O	Default: PC14 Alternate: EVENTOUT Additional: OSC32IN
32	PC15	I/O	Default: PC15 Alternate: IFRP_OUT, EVENTOUT Additional: OSC32OUT
33	NRST	I/O	Default: NRST
34	PU	-	Default: PU

3.2 Mechanical Specifications

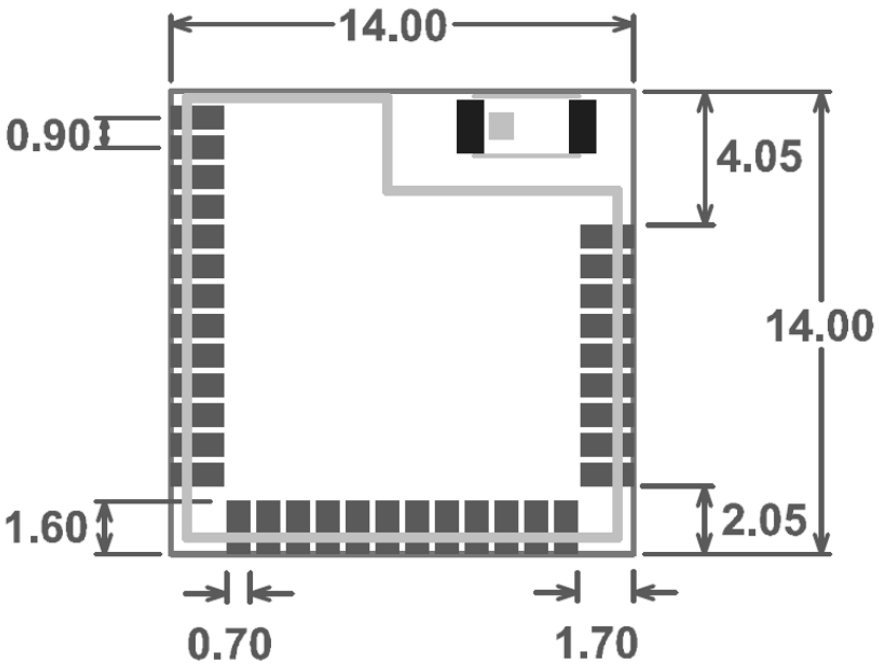

4.Thermal Reflow

Referred to IPC/JEDEC standard.
Peak temperature: <250°C.
Number of times: ≤2.

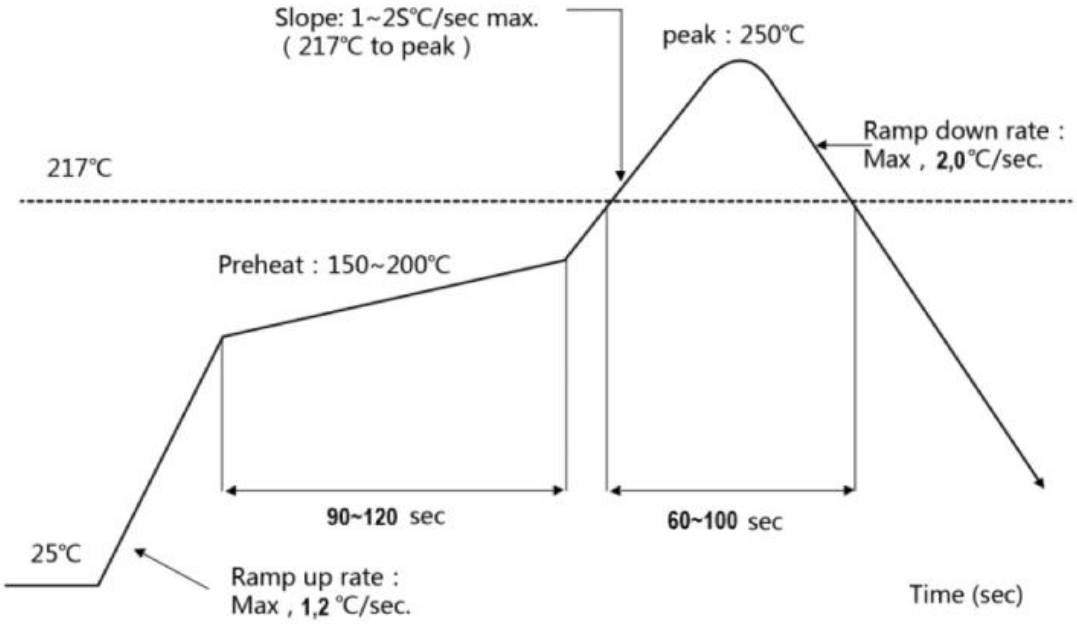

FCC Compliance Statement

This device complies with part 15 of the FCC rules. Operation is subject to the following two conditions: (1) This device may not cause harmful interference, and (2) this device must accept any interference received, including interference that may cause undesired operation.

FCC Interference Statement

This equipment has been tested and found to comply with the limits for a Class B digital device, pursuant to part 15 of the FCC Rules. These limits are designed to provide reasonable protection against harmful interference in a residential installation. This equipment generates, uses and can radiate radio frequency energy and, if not installed and used in accordance with the instructions, may cause harmful interference to radio communications. However, there is no guarantee that interference will not occur in a particular installation. If this equipment does cause harmful interference to radio or television reception, which can be determined by turning the equipment off and on, the user is encouraged to correct the interference by one of the following measures:

• Reorient or relocate the receiving antenna.

• Increase the separation between the equipment and receiver.

• Connect the equipment into an outlet on a circuit different from which the receiver is connected.

• Consult the dealer or an experienced radio/TV technician for help.

FCC Caution

Any changes or modifications not expressly approved by the party responsible for compliance could void the user's authority to operate this equipment. This transmitter must not be co-located or operating in conjunction with any other antenna or transmitter.

FCC ID : 2BN7Q-GNK553-A

End Product Labeling

The module is labeled with its own FCC ID. If the FCC ID is not visible when the module is installed inside another device, then the outside of the device into which the module is installed must also display a label referring to the enclosed module. In that case, the final end product must be labeled in a visible area with the following:
“Contains FCC ID: **2BN7Q-GNK553-A**”

Information on test modes and additional testing requirements

a) The modular transmitter has been fully tested by the module grantee on the required number of channels,modulation types and modes, it should not be necessary for the host installer to retest all the available transmitter modes or settings.It is recommended that the host product manufacturer installing the modular transmitter,perform some investigative measurements to confirm that the resulting composite system does not exceed the spurious emissions limits or band edge limits(e.g.,where a different antenna may be causing additional emissions).

b) The testing should check for emissions that may occur due to the intermixing of emissions with the other transmitter, digital circuitry,or due to physical properties of the host product(enclosure).
This investigation is especially important when integrating multiple modular transmitters where the certification is based on testing each of them in a standalone configuration. It is important to note that host product manufactures should not assume that because the modular transmitter is certified that they do not have any responsibility for final product compliance.

Additional testing, Part 15 subpart B disclaimer

The final host/module combination need to be evaluated against the FCC Part 15B criteria for unintentional radiators in order to be properly authorized for operation as a Part 15 digital device. The host integrator installing this module into their product must ensure that the final composite product complies with the FCC requirements by a technical assessment or evaluation to the FCC rules, including the transmitter operation and should refer to guidance in KDB 996369.
This appliance and its antenna must not be co-located or operation in conjunction with any other antenna or transmitter.
- OEM integrators must ensure that its product is electrically identical to the device, FCC ID: **2BN7Q-GNK553-A** reference designs . Any modifications to module reference designs may invalidate regulatory approvals in relation to the product, or may necessitate notifications to the relevant regulatory authorities.
- OEM integrators are responsible for regression testing to accommodate changes to designs, new antennas, and host and submit for C2PC filings.
- Colocation with other transmitter modules will be addressed through filings for those co-located transmitters when necessary or that colocation of other transmitters will be according to applicable KDB guidelines including those for RF exposure
- Appropriate labels must be affixed to the product that complies with applicable regulations in all respects. The regulatory label on the final system must include the statement:
“Contains FCC ID: **2BN7Q-GNK553-A**”.

1. The module is limited to OEM installation ONLY.
2. OEM integrators are responsible for ensuring that the end-user has no manual instructions to remove or install module.
3. The module is limited to installation in mobile or fixed applications, according to Part 2.1091(b).
4. Separate approval is required for all other operating configurations, including portable configurations with respect to Part 2.1093 and different antenna configurations.