User Manual for smart camera（QS1）

（1）Product Analysis Diagram

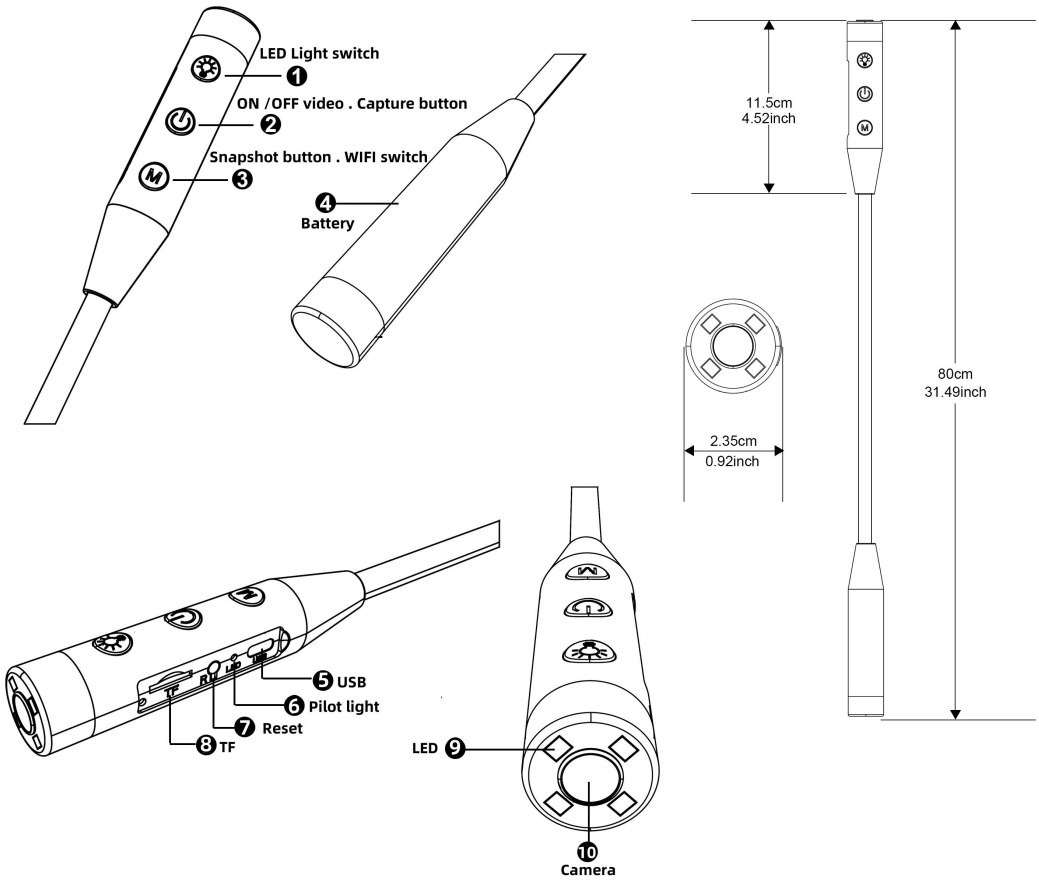

1.LED Light switch 2.ON /OFF video . Capture button 3.Snapshot button . WIFI switch 4.Battery 5.USB 6.Pilot light 7.Reset 8.TF 9.LED 10.Camera

（2）APP Download

1. Use your mobile phone to scan the QR code to download the RoadCam software.

2. Search for the RoadCam software in the mobile app store and click "Download", as shown in the figure.

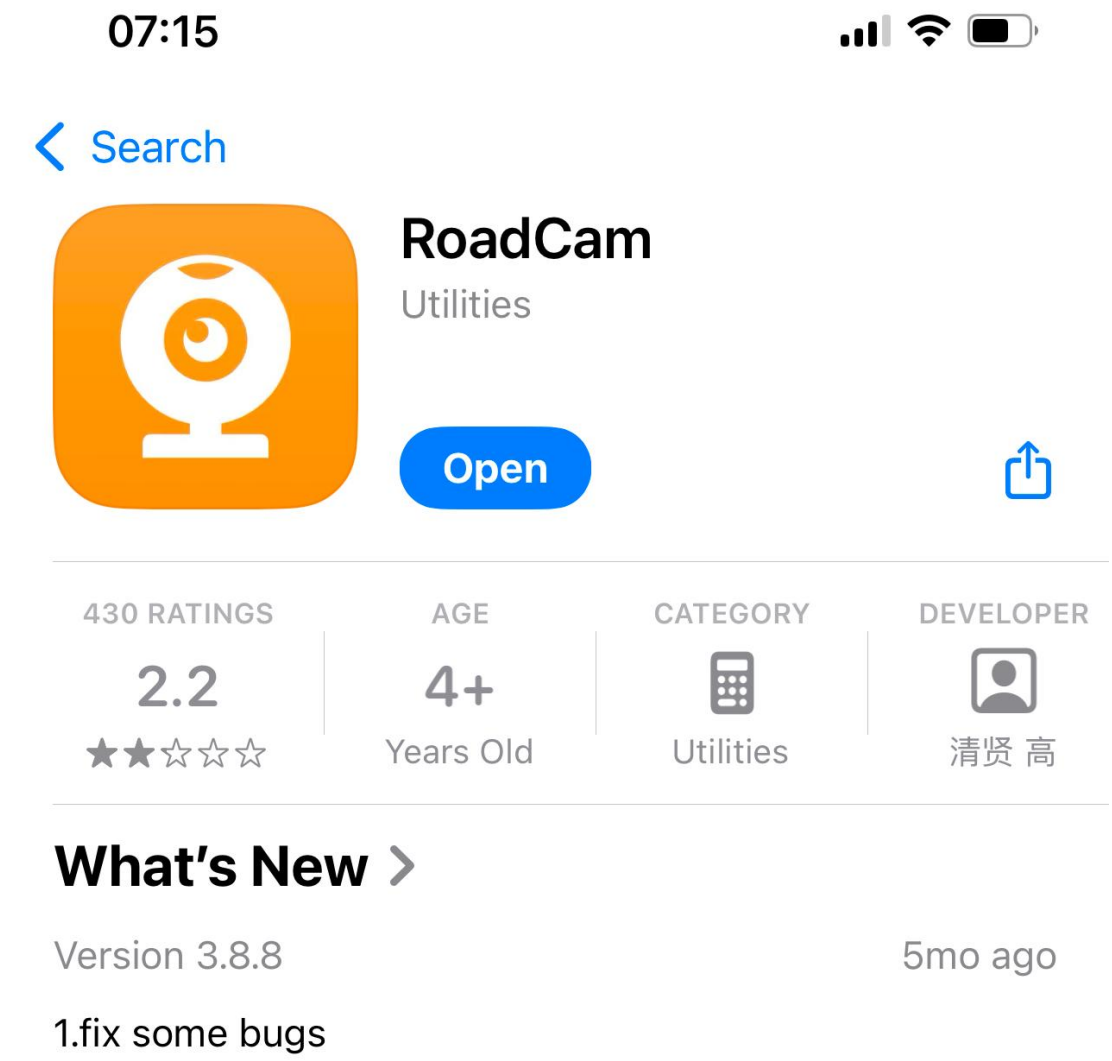

（3）Function Operation Instructions

Note: (This device can only be used when a memory card is installed.)

1. Flashlight On: Press and hold the button 1, and the LED will turn on. After it's turned on, press and hold the button 1 again, and the LED will turn off. When the flashlight is turned on, it's at 100% brightness. Press the button briefly once, and the brightness will be adjusted to 50%. Press it briefly again, and it will enter the SOS strobe mode. (The three gears will cycle in sequence when pressing the button briefly.)
2. Power On: Press and hold the button 2, and the blue light will stay on constantly. Then it will enter the standby state.
3. Power Off: When the blue light stays on constantly after powering on, press and hold the button 2 until the indicator light goes out, and then the device will be powered off.
4. Video Recording: When the blue light stays on constantly after powering on, press the button 2 briefly once, and the blue light will start flashing. At this time, it enters the video recording state.
5. Stop Video Recording: When in the video recording state with the blue light flashing, press the button 2 briefly once. At this time, the blue light will stay on constantly and the video recording will stop.

6. Taking Photos: When the blue light stays on constantly after powering on, press the button 3 briefly once, and the blue light will flash once, which indicates that a photo has been taken.
7. WIFI On: When the blue light stays on constantly after powering on, press the button 3 twice briefly. Then the red and blue lights will flash alternately, indicating that the WIFI has been turned on.
8. WIFI Off: When the red and blue lights are flashing alternately and the WIFI is on, press the button 3 twice briefly. Then the blue light will stay on constantly, indicating that the WIFI has been turned off.
9. Charging: The red light flashes while charging, and when fully charged, both the red and blue lights will stay on constantly.
10. Connecting to a computer: The blue light stays on constantly when connected to a computer.
11. When the battery is low, the red light will flash 10 times and then the device will power off.
12. If the device is powered on without a memory card installed, the red light will flash quickly 10 times and then the device will shut down.
13. Modify the date and time for video recording.

Connect the video camera to the computer with a data cable. Click "My Computer", open the removable disk, and then open the "time" text file. Modify the date and time of the video recorder in the text file. The format of the date and time in the text should not be changed, as shown in the figure.

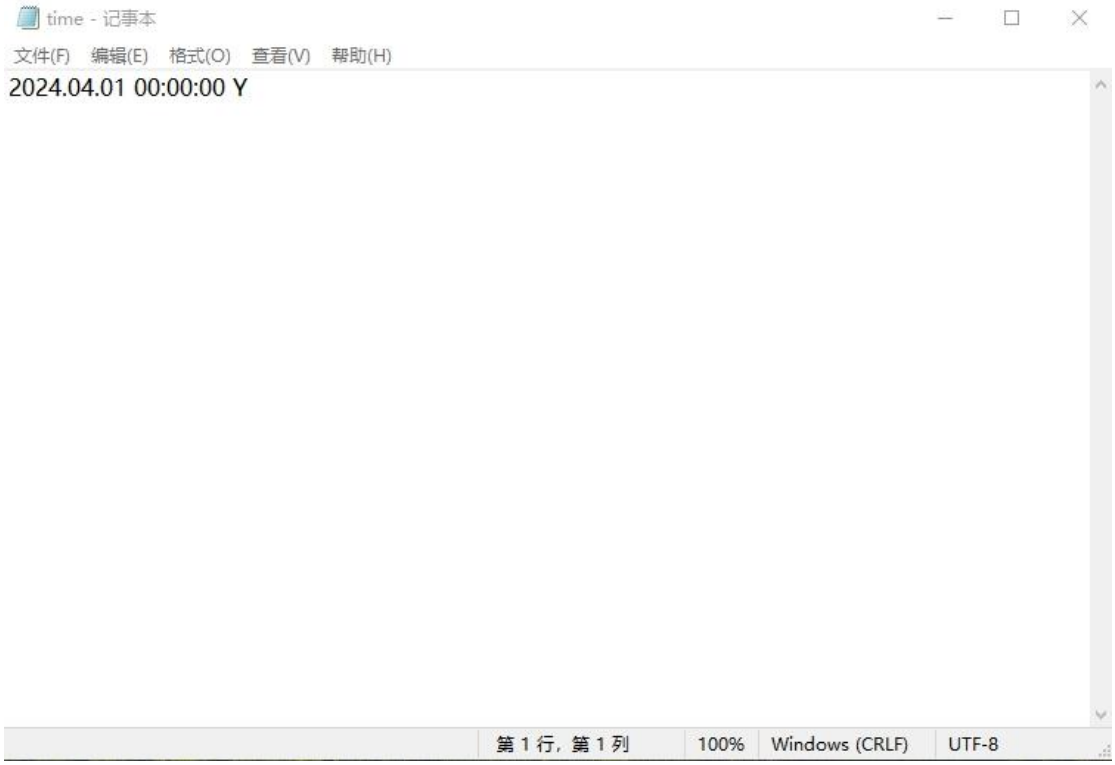

（4）APP functions

1. Connect the mobile phone to WIFI.

When the WIFI is turned on, the red and blue lights blink alternately, indicating that the WIFI has been enabled. Open the WIFI on your mobile phone, find the WIFI signal starting with QS1-WIFI and click to connect, as shown in Figure (1). After the connection is successful, open the APP: RoadCam, and then click "Add Device", as shown in Figure (2). Note: If the connection is

unsuccessful, please go back to the WIFI settings on your mobile phone to check and make sure that you have successfully connected to the WIFI signal starting with QS1-WIFI, and then open the APP: RoadCam to make the connection.

Figure (1)

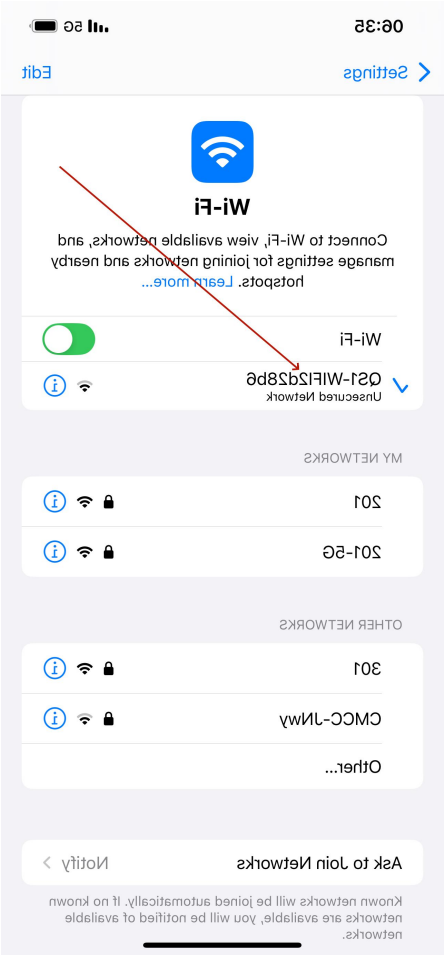

Figure (2)

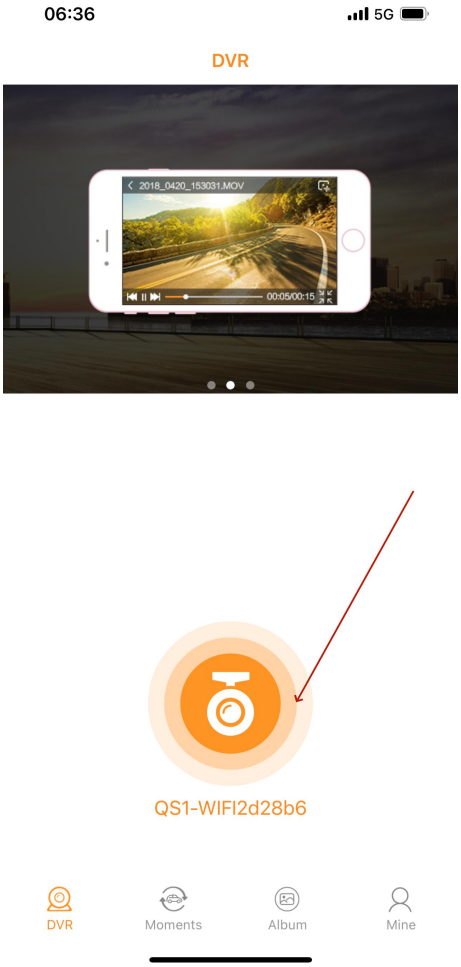

2. APP interface functions

After the connection is successful, as shown in the figure: 1. You can disconnect the connection between the camera and the mobile phone. 2. You can enter the settings interface. 3. You can play back the recorded videos. 4. You can view the taken photos. 5. Record videos. 6. Take photos.

Click on 2 to enter the settings interface, where you can adjust various parameters of the camera, as shown in the figure.

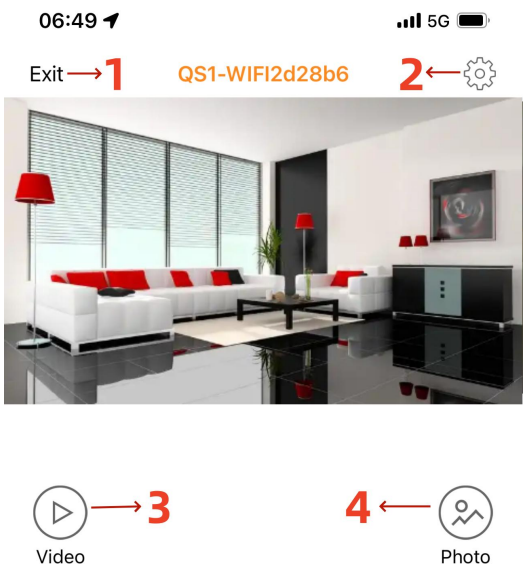

（5）Parameters

Battery Capacity: 2600 mA

Recording duration: Approximately 10 hours (when the APP is not opened).

Video resolution:1080FHD*1920x1080　1080P 1440x1080　720P 1280x720

Resolution:12M（4032x3024）　10M（3648x2736）　8M（3264x2736）　5M（2592x1944）
3M（2048x1536）　2MHD（1920x1080）　1.3M（1280x960）　VGA（640x480）

Loop recording: 1 minute, 2 minutes, 3 minutes, 5 minutes.

Exposure: +2.0, +5/3, +4/3, +1.0, +2/3, +1/3, +0.0, -1/3, -2/3, -1.0, -4/3, -5/3, -2.0

Power frequency: 50HZ, 60HZ

Product certification：FCC，CE，UN38.3 ，UL

FCC Caution:

This device complies with part 15 of the FCC Rules. Operation is subject to the following two conditions: (1) This device may not cause harmful interference, and (2) this device must accept any interference received, including interference that may cause undesired operation.

Any changes or modifications not expressly approved by the party responsible for compliance could void the user's authority to operate the equipment.

NOTE: This equipment has been tested and found to comply with the limits for a Class B digital device, pursuant to Part 15 of the FCC Rules. These limits are designed to provide reasonable protection against harmful interference in a residential installation. This equipment generates, uses and can radiate radio frequency energy and, if not installed and used in accordance with the instructions, may cause harmful interference to radio communications. However, there is no guarantee that interference will not occur in a particular installation.If this equipment does cause harmful interference to radio or television reception,

which can be determined by turning the equipment off and on, the user is encouraged to try to correct the interference by one or more of the following measures:

-- Reorient or relocate the receiving antenna.

-- Increase the separation between the equipment and receiver.

-- Connect the equipment into an outlet on a circuit different

from that to which the receiver is connected.

-- Consult the dealer or an experienced radio/TV technician for help.

The device has been evaluated to meet general RF exposure requirement. The device can be used in portable exposure condition without restriction.