Recognition

ClientName: HKC

Material number:

Model number: G43-0.8-6.8UH-12MM

Date: 2024.12.03

Supplier: Dongguan Jierisi Technology Co.,Ltd.

Draft	Audit	Approval
Wang Lizhi	Deng Xianggui	Lu Yusheng

Customer Recognition:

Competent	Unsatisfactory	Recognition
Remarks		

Dongguan Jierisi Technology Co.,Ltd.

Tel:

Fax: 86+13632701380

地址：No. 152, Guanchang Road, Taigongling Village, Dalingshan Town, Dongguan City, China

ClientName	Material	Model number	Version	Date
HKC		G43-0.8-6.8UH-12MM	A0	2024.12.3

一、Floor plan: Unit:MM

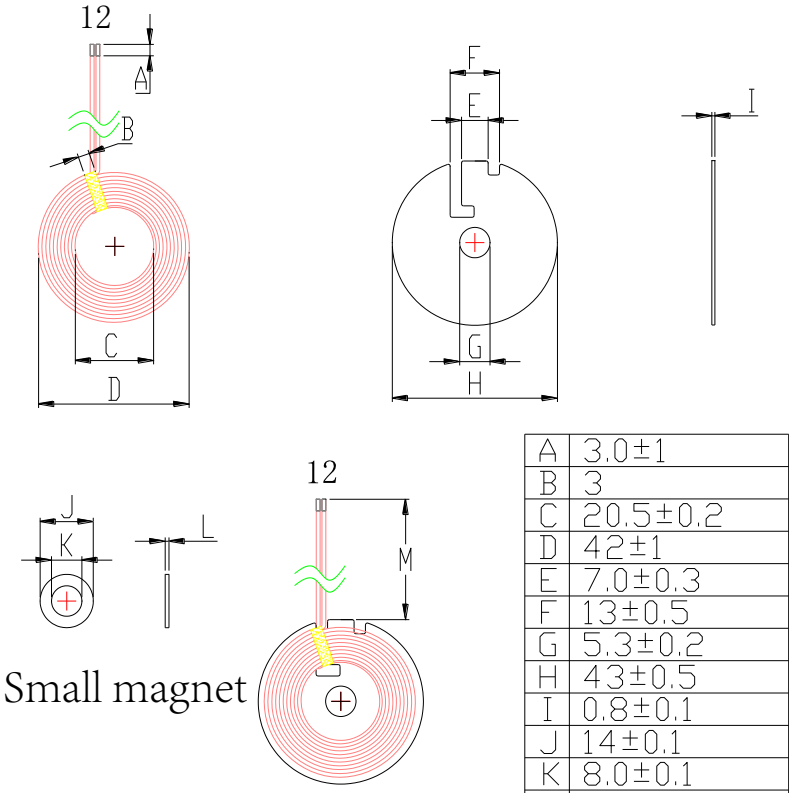

A	3.0±1
B	3
C	20.5±0.2
D	42±1
E	7.0±0.3
F	13±0.5
G	5.3±0.2
H	43±0.5
I	0.8±0.1
J	14±0.1
K	8.0±0.1
L	1.0±0.1
M	12±1

二、Product Parameters:

Foot position	Wire diameter	Number of laps	Remark
1 - 2	0.07*100P	10	Silk yarn

三、Technical requirement:

1. Fix the thread ends and tails to prevent loose threads and breakage.

2. According to the customer's requirements of the long wire cut, tin-plated, tin-plated depth of unity for 3± 1MM

3. Dot the soft magnetic sheet with appropriate white glue, paste the coil, the process to ensure that the surface of the product is clean and tidy.

4. Flexible magnetic sheets used with round holes and without breakage.

四、Electrical parameters：

1.Inductance，Q value：

PIN 1 — 2 = 6.8uH ±0.4UH

Q value≥45 Total thickness 2.0mm

The above inductance values are based on an Ambrose 1062A instrument, 10KHZ/0.3Vrms as a standard or equivalent instrument.

Q value is based on Quan Hua 1062A instrument with 100KHZ/0.3Vrms as standard or equivalent.

五、Bill of materials：

No.	Name	Material	Provider	Remark
1	Silk yarn	0.07X100P		
2	Magnetic disk	G43 soft substrate		Magnets 14*8*1.0
3	Tin	Environmental protection		
4	White glue	BY882		
5	High temperature adhesive tape	3mm		
6	Double-sided adhesive	Diameter 42mm		
7				