Vertical

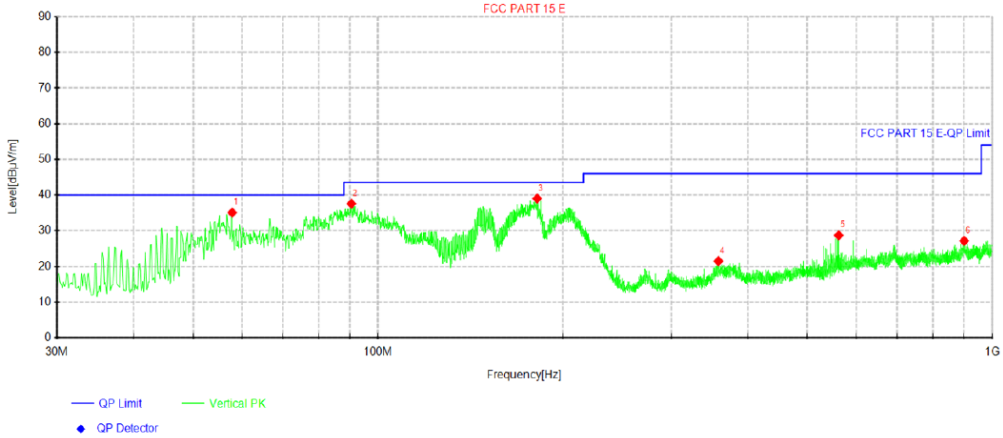

Suspected Data List									
NO.	Freq. [MHz]	Reading [dBμV]	Level [dBμV/m]	Factor [dB/m]	Limit [dBμV/m]	Margin [dB]	Height [cm]	Angle [°]	Polarity
1	57.8875	47.35	35.10	-12.25	40.00	4.90	100	113	Vertical
2	90.5038	52.18	37.56	-14.62	43.50	5.94	100	350	Vertical
3	181.562	53.50	39.04	-14.46	43.50	4.46	100	253	Vertical
4	358.223	32.04	21.47	-10.57	46.00	24.53	100	138	Vertical
5	562.166	36.86	28.72	-8.14	46.00	17.28	100	219	Vertical
6	899.847	29.70	27.15	-2.55	46.00	18.85	100	358	Vertical

Note:1).Level (dBμV/m)= Reading (dBμV)+ Factor (dB/m)

2). Factor(dB/m)=Antenna Factor (dB/m) + Cable loss (dB) - Pre Amplifier gain (dB)

3). Margin(dB) = Limit (dBμV/m) - Level (dBμV/m)

For 1GHz to 40GHz

Note: 1. All modes of 802.11a/n/11ac/11ax have been tested for above 1GHz test, only the worst case 802.11a was recorded.

2. We tested the product in both adapter and solar panel power supply modes, and recorded the worst data for using the adapter in the report.

Model: TW37

U-NII 3 & 802.11a Mode (above 1GHz)

Tested	Frequency	Emission	Detector	ANT	Limit	Margin	Raw	Antenna	Cable	Pre	Correction
Channel	(MHz)	Level	Mode	Pol	(dBuV/m)	(dB)	Value	Factor	Factor	amplifier	Factor
		(dBuV/m)					(dBuV)	(dB/m)	(dB)	(dB)	(dB/m)
	5650.00	38.94	PK	H	68.30	29.36	41.17	33.20	5.78	41.21	-2.23
	5700.00	41.69	PK	H	105.30	63.61	44.03	33.40	5.93	41.67	-2.34
	5720.00	42.39	PK	H	110.90	68.51	45.17	33.42	6.04	42.24	-2.78
	5725.00	43.24	PK	H	122.30	79.06	46.02	33.42	6.04	42.24	-2.78
149.00	5745.00	63.42	PK	H	122.30	58.88	66.20	33.42	6.04	42.24	-2.78
(5745MHz)	5850.00	48.55	PK	H	122.30	73.75	50.95	33.90	6.49	42.79	-2.40
	5855.00	45.74	PK	H	110.90	65.16	48.03	33.90	6.74	42.93	-2.29
	5875.00	46.07	PK	H	105.30	59.23	48.17	33.97	7.02	43.09	-2.10
	5925.00	46.43	PK	H	68.30	21.87	48.20	34.17	7.33	43.27	-1.77
149.00	11490.00	53.43	PK	H	68.30	14.87	48.95	39.02	10.91	45.45	4.48
(5745MHz)	--	--	AV	H	--	--		--	--	--	--
	5650.00	39.94	PK	H	68.30	28.36	42.17	33.20	5.78	41.21	-2.23
	5700.00	41.90	PK	H	105.30	63.40	44.24	33.40	5.93	41.67	-2.34
	5720.00	42.35	PK	H	110.90	68.55	45.13	33.42	6.04	42.24	-2.78
157.00	5785.00	62.34	PK	H	122.30	59.96	65.12	33.42	6.04	42.24	-2.78
(5785MHz)	5850.00	48.65	PK	H	122.30	73.65	51.05	33.90	6.49	42.79	-2.40
	5855.00	45.81	PK	H	110.90	65.09	48.10	33.90	6.74	42.93	-2.29
	5875.00	46.09	PK	H	105.30	59.21	48.19	33.97	7.02	43.09	-2.10
	5925.00	46.18	PK	H	68.30	22.12	47.95	34.17	7.33	43.27	-1.77
157.00	11570.00	53.60	PK	H	68.30	14.70	49.15	38.93	10.95	45.43	4.45
(5785MHz)	--	--	AV	H	--	--	--	--	--	--	--
	5650.00	38.86	PK	H	68.30	29.44	41.09	33.20	5.78	41.21	-2.23
	5700.00	40.62	PK	H	105.30	64.68	42.96	33.40	5.93	41.67	-2.34
	5720.00	43.28	PK	H	110.90	67.62	46.06	33.42	6.04	42.24	-2.78
165.00	5825.00	60.34	PK	H	122.30	61.96	63.12	33.42	6.04	42.24	-2.78
(5825MHz)	5850.00	47.58	PK	H	122.30	74.72	49.98	33.90	6.49	42.79	-2.40
	5855.00	45.94	PK	H	110.90	64.96	48.23	33.90	6.74	42.93	-2.29
	5875.00	45.93	PK	H	105.30	59.37	48.03	33.97	7.02	43.09	-2.10
	5925.00	46.20	PK	H	68.30	22.10	47.97	34.17	7.33	43.27	-1.77
165.00	11650.00	52.72	PK	H	68.30	15.58	48.14	38.83	11.16	45.41	4.58
(5825MHz)	--	--	AV	H	--	--	--	--	--	--	--

Tested	Frequency	Emission	Detector	ANT	Limit	Margin	Raw	Antenna	Cable	Pre	Correction
Channel	(MHz)	Level	Mode	Pol	(dBuV/m)	(dB)	Value	Factor	Factor	amplifier	Factor
		(dBuV/m)					(dBuV)	(dB/m)	(dB)	(dB)	(dB/m)
	5650.00	39.75	PK	V	68.30	28.55	41.98	33.20	5.78	41.21	-2.23
	5700.00	41.60	PK	V	105.30	63.70	43.94	33.40	5.93	41.67	-2.34
	5720.00	43.27	PK	V	110.90	67.63	46.05	33.42	6.04	42.24	-2.78
	5725.00	45.30	PK	V	122.30	77.00	48.08	33.42	6.04	42.24	-2.78
149.00	5745.00	62.40	PK	V	122.30	59.90	65.18	33.42	6.04	42.24	-2.78
(5745MHz)	5850.00	46.68	PK	V	122.30	75.62	49.08	33.90	6.49	42.79	-2.40
	5855.00	45.74	PK	V	110.90	65.16	48.03	33.90	6.74	42.93	-2.29
	5875.00	45.86	PK	V	105.30	59.44	47.96	33.97	7.02	43.09	-2.10
	5925.00	46.26	PK	V	68.30	22.04	48.03	34.17	7.33	43.27	-1.77
149.00	11490.00	52.68	PK	V	68.30	15.62	48.20	39.02	10.91	45.45	4.48
(5745MHz)	--	--	AV	V	--	--		--	--	--	--
	5650.00	38.80	PK	V	68.30	29.50	41.03	33.20	5.78	41.21	-2.23
	5700.00	41.86	PK	V	105.30	63.44	44.20	33.40	5.93	41.67	-2.34
	5720.00	42.48	PK	V	110.90	68.42	45.26	33.42	6.04	42.24	-2.78
157.00	5785.00	62.35	PK	V	122.30	59.95	65.13	33.42	6.04	42.24	-2.78
(5785MHz)	5850.00	48.59	PK	V	122.30	73.71	50.99	33.90	6.49	42.79	-2.40
	5855.00	45.89	PK	V	110.90	65.01	48.18	33.90	6.74	42.93	-2.29
	5875.00	46.20	PK	V	105.30	59.10	48.30	33.97	7.02	43.09	-2.10
	5925.00	46.44	PK	V	68.30	21.86	48.21	34.17	7.33	43.27	-1.77
157.00	11570.00	53.37	PK	V	68.30	14.93	48.92	38.93	10.95	45.43	4.45
(5785MHz)	--	--	AV	V	--	--	--	--	--	--	--
	5650.00	39.87	PK	V	68.30	28.43	42.10	33.20	5.78	41.21	-2.23
	5700.00	41.61	PK	V	105.30	63.69	43.95	33.40	5.93	41.67	-2.34
	5720.00	43.27	PK	V	110.90	67.63	46.05	33.42	6.04	42.24	-2.78
165.00	5825.00	63.48	PK	V	122.30	58.82	66.26	33.42	6.04	42.24	-2.78
(5825MHz)	5850.00	47.81	PK	V	122.30	74.49	50.21	33.90	6.49	42.79	-2.40
	5855.00	45.70	PK	V	110.90	65.20	47.99	33.90	6.74	42.93	-2.29
	5875.00	46.04	PK	V	105.30	59.26	48.14	33.97	7.02	43.09	-2.10
	5925.00	46.36	PK	V	68.30	21.94	48.13	34.17	7.33	43.27	-1.77
165.00	11650.00	52.83	PK	V	68.30	15.47	48.25	38.83	11.16	45.41	4.58
(5825MHz)	--	--	AV	V	--	--	--	--	--	--	--

Model: TW36

U-NII 3 & 802.11a Mode (above 1GHz)

Tested	Frequency	Emission	Detector	ANT	Limit	Margin	Raw	Antenna	Cable	Pre	Correction
Channel	(MHz)	Level	Mode	Pol	(dBuV/m)	(dB)	Value	Factor	Factor	amplifier	Factor
		(dBuV/m)					(dBuV)	(dB/m)	(dB)	(dB)	(dB/m)
	5650.00	38.88	PK	H	68.30	29.42	41.11	33.20	5.78	41.21	-2.23
	5700.00	40.60	PK	H	105.30	64.70	42.94	33.40	5.93	41.67	-2.34
	5720.00	42.36	PK	H	110.90	68.54	45.14	33.42	6.04	42.24	-2.78
	5725.00	42.38	PK	H	122.30	79.92	45.16	33.42	6.04	42.24	-2.78
149.00	5745.00	60.49	PK	H	122.30	61.81	63.27	33.42	6.04	42.24	-2.78
(5745MHz)	5850.00	47.65	PK	H	122.30	74.65	50.05	33.90	6.49	42.79	-2.40
	5855.00	45.77	PK	H	110.90	65.13	48.06	33.90	6.74	42.93	-2.29
	5875.00	45.88	PK	H	105.30	59.42	47.98	33.97	7.02	43.09	-2.10
	5925.00	46.41	PK	H	68.30	21.89	48.18	34.17	7.33	43.27	-1.77
149.00	11490.00	53.71	PK	H	68.30	14.59	49.23	39.02	10.91	45.45	4.48
(5745MHz)	--	--	AV	H	--	--		--	--	--	--
	5650.00	38.94	PK	H	68.30	29.36	41.17	33.20	5.78	41.21	-2.23
	5700.00	41.64	PK	H	105.30	63.66	43.98	33.40	5.93	41.67	-2.34
	5720.00	43.43	PK	H	110.90	67.47	46.21	33.42	6.04	42.24	-2.78
157.00	5785.00	59.17	PK	H	122.30	63.13	61.95	33.42	6.04	42.24	-2.78
(5785MHz)	5850.00	48.79	PK	H	122.30	73.51	51.19	33.90	6.49	42.79	-2.40
	5855.00	45.84	PK	H	110.90	65.06	48.13	33.90	6.74	42.93	-2.29
	5875.00	45.91	PK	H	105.30	59.39	48.01	33.97	7.02	43.09	-2.10
	5925.00	46.38	PK	H	68.30	21.92	48.15	34.17	7.33	43.27	-1.77
157.00	11570.00	52.55	PK	H	68.30	15.75	48.10	38.93	10.95	45.43	4.45
(5785MHz)	--	--	AV	H	--	--	--	--	--	--	--
	5650.00	39.99	PK	H	68.30	28.31	42.22	33.20	5.78	41.21	-2.23
	5700.00	40.67	PK	H	105.30	64.63	43.01	33.40	5.93	41.67	-2.34
	5720.00	43.29	PK	H	110.90	67.61	46.07	33.42	6.04	42.24	-2.78
165.00	5825.00	58.27	PK	H	122.30	64.03	61.05	33.42	6.04	42.24	-2.78
(5825MHz)	5850.00	45.54	PK	H	122.30	76.76	47.94	33.90	6.49	42.79	-2.40
	5855.00	45.91	PK	H	110.90	64.99	48.20	33.90	6.74	42.93	-2.29
	5875.00	45.92	PK	H	105.30	59.38	48.02	33.97	7.02	43.09	-2.10
	5925.00	46.28	PK	H	68.30	22.02	48.05	34.17	7.33	43.27	-1.77
165.00	11650.00	52.77	PK	H	68.30	15.53	48.19	38.83	11.16	45.41	4.58
(5825MHz)	--	--	AV	H	--	--	--	--	--	--	--

Tested	Frequency	Emission	Detector	ANT	Limit	Margin	Raw	Antenna	Cable	Pre	Correction
Channel	(MHz)	Level	Mode	Pol	(dBuV/m)	(dB)	Value	Factor	Factor	amplifier	Factor
		(dBuV/m)					(dBuV)	(dB/m)	(dB)	(dB)	(dB/m)
	5650.00	39.89	PK	V	68.30	28.41	42.12	33.20	5.78	41.21	-2.23
	5700.00	41.72	PK	V	105.30	63.58	44.06	33.40	5.93	41.67	-2.34
	5720.00	43.28	PK	V	110.90	67.62	46.06	33.42	6.04	42.24	-2.78
	5725.00	42.22	PK	V	122.30	80.08	45.00	33.42	6.04	42.24	-2.78
149.00	5745.00	63.41	PK	V	122.30	58.89	66.19	33.42	6.04	42.24	-2.78
(5745MHz)	5850.00	46.62	PK	V	122.30	75.68	49.02	33.90	6.49	42.79	-2.40
	5855.00	45.81	PK	V	110.90	65.09	48.10	33.90	6.74	42.93	-2.29
	5875.00	45.88	PK	V	105.30	59.42	47.98	33.97	7.02	43.09	-2.10
	5925.00	46.34	PK	V	68.30	21.96	48.11	34.17	7.33	43.27	-1.77
149.00	11490.00	52.54	PK	V	68.30	15.76	48.06	39.02	10.91	45.45	4.48
(5745MHz)	--	--	AV	V	--	--		--	--	--	--
	5650.00	38.87	PK	V	68.30	29.43	41.10	33.20	5.78	41.21	-2.23
	5700.00	40.80	PK	V	105.30	64.50	43.14	33.40	5.93	41.67	-2.34
	5720.00	42.36	PK	V	110.90	68.54	45.14	33.42	6.04	42.24	-2.78
157.00	5785.00	61.13	PK	V	122.30	61.17	63.91	33.42	6.04	42.24	-2.78
(5785MHz)	5850.00	46.63	PK	V	122.30	75.67	49.03	33.90	6.49	42.79	-2.40
	5855.00	45.70	PK	V	110.90	65.20	47.99	33.90	6.74	42.93	-2.29
	5875.00	45.91	PK	V	105.30	59.39	48.01	33.97	7.02	43.09	-2.10
	5925.00	46.51	PK	V	68.30	21.79	48.28	34.17	7.33	43.27	-1.77
157.00	11570.00	53.75	PK	V	68.30	14.55	49.30	38.93	10.95	45.43	4.45
(5785MHz)	--	--	AV	V	--	--	--	--	--	--	--
	5650.00	38.83	PK	V	68.30	29.47	41.06	33.20	5.78	41.21	-2.23
	5700.00	40.96	PK	V	105.30	64.34	43.30	33.40	5.93	41.67	-2.34
	5720.00	42.42	PK	V	110.90	68.48	45.20	33.42	6.04	42.24	-2.78
165.00	5825.00	61.26	PK	V	122.30	61.04	64.04	33.42	6.04	42.24	-2.78
(5825MHz)	5850.00	47.81	PK	V	122.30	74.49	50.21	33.90	6.49	42.79	-2.40
	5855.00	45.76	PK	V	110.90	65.14	48.05	33.90	6.74	42.93	-2.29
	5875.00	46.04	PK	V	105.30	59.26	48.14	33.97	7.02	43.09	-2.10
	5925.00	46.27	PK	V	68.30	22.03	48.04	34.17	7.33	43.27	-1.77
165.00	11650.00	52.83	PK	V	68.30	15.47	48.25	38.83	11.16	45.41	4.58
(5825MHz)	--	--	AV	V	--	--	--	--	--	--	--

Model: QS12

U-NII 3 & 802.11a Mode (above 1GHz)

Tested	Frequency	Emission	Detector	ANT	Limit	Margin	Raw	Antenna	Cable	Pre	Correction
Channel	(MHz)	Level	Mode	Pol	(dBuV/m)	(dB)	Value	Factor	Factor	amplifier	Factor
		(dBuV/m)					(dBuV)	(dB/m)	(dB)	(dB)	(dB/m)
	5650.00	38.86	PK	H	68.30	29.44	41.09	33.20	5.78	41.21	-2.23
	5700.00	40.67	PK	H	105.30	64.63	43.01	33.40	5.93	41.67	-2.34
	5720.00	43.35	PK	H	110.90	67.55	46.13	33.42	6.04	42.24	-2.78
	5725.00	43.40	PK	H	122.30	78.90	46.18	33.42	6.04	42.24	-2.78
149.00	5745.00	61.23	PK	H	122.30	61.07	64.01	33.42	6.04	42.24	-2.78
(5745MHz)	5850.00	46.68	PK	H	122.30	75.62	49.08	33.90	6.49	42.79	-2.40
	5855.00	45.82	PK	H	110.90	65.08	48.11	33.90	6.74	42.93	-2.29
	5875.00	46.06	PK	H	105.30	59.24	48.16	33.97	7.02	43.09	-2.10
	5925.00	46.38	PK	H	68.30	21.92	48.15	34.17	7.33	43.27	-1.77
149.00	11490.00	53.51	PK	H	68.30	14.79	49.03	39.02	10.91	45.45	4.48
(5745MHz)	--	--	AV	H	--	--		--	--	--	--
	5650.00	38.72	PK	H	68.30	29.58	40.95	33.20	5.78	41.21	-2.23
	5700.00	40.78	PK	H	105.30	64.52	43.12	33.40	5.93	41.67	-2.34
	5720.00	43.31	PK	H	110.90	67.59	46.09	33.42	6.04	42.24	-2.78
157.00	5785.00	59.25	PK	H	122.30	63.05	62.03	33.42	6.04	42.24	-2.78
(5785MHz)	5850.00	48.69	PK	H	122.30	73.61	51.09	33.90	6.49	42.79	-2.40
	5855.00	45.79	PK	H	110.90	65.11	48.08	33.90	6.74	42.93	-2.29
	5875.00	45.98	PK	H	105.30	59.32	48.08	33.97	7.02	43.09	-2.10
	5925.00	46.40	PK	H	68.30	21.90	48.17	34.17	7.33	43.27	-1.77
157.00	11570.00	52.46	PK	H	68.30	15.84	48.01	38.93	10.95	45.43	4.45
(5785MHz)	--	--	AV	H	--	--	--	--	--	--	--
	5650.00	40.00	PK	H	68.30	28.30	42.23	33.20	5.78	41.21	-2.23
	5700.00	40.80	PK	H	105.30	64.50	43.14	33.40	5.93	41.67	-2.34
	5720.00	42.38	PK	H	110.90	68.52	45.16	33.42	6.04	42.24	-2.78
165.00	5825.00	58.34	PK	H	122.30	63.96	61.12	33.42	6.04	42.24	-2.78
(5825MHz)	5850.00	47.84	PK	H	122.30	74.46	50.24	33.90	6.49	42.79	-2.40
	5855.00	45.77	PK	H	110.90	65.13	48.06	33.90	6.74	42.93	-2.29
	5875.00	46.00	PK	H	105.30	59.30	48.10	33.97	7.02	43.09	-2.10
	5925.00	46.47	PK	H	68.30	21.83	48.24	34.17	7.33	43.27	-1.77
165.00	11650.00	52.83	PK	H	68.30	15.47	48.25	38.83	11.16	45.41	4.58
(5825MHz)	--	--	AV	H	--	--	--	--	--	--	--

Tested	Frequency	Emission	Detector	ANT	Limit	Margin	Raw	Antenna	Cable	Pre	Correction
Channel	(MHz)	Level	Mode	Pol	(dBuV/m)	(dB)	Value	Factor	Factor	amplifier	Factor
		(dBuV/m)					(dBuV)	(dB/m)	(dB)	(dB)	(dB/m)
	5650.00	39.96	PK	V	68.30	28.34	42.19	33.20	5.78	41.21	-2.23
	5700.00	41.67	PK	V	105.30	63.63	44.01	33.40	5.93	41.67	-2.34
	5720.00	43.41	PK	V	110.90	67.49	46.19	33.42	6.04	42.24	-2.78
	5725.00	43.39	PK	V	122.30	78.91	46.17	33.42	6.04	42.24	-2.78
149.00	5745.00	63.35	PK	V	122.30	58.95	66.13	33.42	6.04	42.24	-2.78
(5745MHz)	5850.00	45.63	PK	V	122.30	76.67	48.03	33.90	6.49	42.79	-2.40
	5855.00	45.92	PK	V	110.90	64.98	48.21	33.90	6.74	42.93	-2.29
	5875.00	45.96	PK	V	105.30	59.34	48.06	33.97	7.02	43.09	-2.10
	5925.00	46.29	PK	V	68.30	22.01	48.06	34.17	7.33	43.27	-1.77
149.00	11490.00	52.78	PK	V	68.30	15.52	48.30	39.02	10.91	45.45	4.48
(5745MHz)	--	--	AV	V	--	--		--	--	--	--
	5650.00	38.77	PK	V	68.30	29.53	41.00	33.20	5.78	41.21	-2.23
	5700.00	41.92	PK	V	105.30	63.38	44.26	33.40	5.93	41.67	-2.34
	5720.00	42.24	PK	V	110.90	68.66	45.02	33.42	6.04	42.24	-2.78
157.00	5785.00	61.34	PK	V	122.30	60.96	64.12	33.42	6.04	42.24	-2.78
(5785MHz)	5850.00	47.84	PK	V	122.30	74.46	50.24	33.90	6.49	42.79	-2.40
	5855.00	45.94	PK	V	110.90	64.96	48.23	33.90	6.74	42.93	-2.29
	5875.00	46.07	PK	V	105.30	59.23	48.17	33.97	7.02	43.09	-2.10
	5925.00	46.26	PK	V	68.30	22.04	48.03	34.17	7.33	43.27	-1.77
157.00	11570.00	53.65	PK	V	68.30	14.65	49.20	38.93	10.95	45.43	4.45
(5785MHz)	--	--	AV	V	--	--	--	--	--	--	--
	5650.00	38.80	PK	V	68.30	29.50	41.03	33.20	5.78	41.21	-2.23
	5700.00	41.79	PK	V	105.30	63.51	44.13	33.40	5.93	41.67	-2.34
	5720.00	43.52	PK	V	110.90	67.38	46.30	33.42	6.04	42.24	-2.78
165.00	5825.00	63.30	PK	V	122.30	59.00	66.08	33.42	6.04	42.24	-2.78
(5825MHz)	5850.00	48.71	PK	V	122.30	73.59	51.11	33.90	6.49	42.79	-2.40
	5855.00	45.73	PK	V	110.90	65.17	48.02	33.90	6.74	42.93	-2.29
	5875.00	46.00	PK	V	105.30	59.30	48.10	33.97	7.02	43.09	-2.10
	5925.00	46.41	PK	V	68.30	21.89	48.18	34.17	7.33	43.27	-1.77
165.00	11650.00	52.72	PK	V	68.30	15.58	48.14	38.83	11.16	45.41	4.58
(5825MHz)	--	--	AV	V	--	--	--	--	--	--	--

Model: QS6

U-NII 3 & 802.11a Mode (above 1GHz)

Tested	Frequency	Emission	Detector	ANT	Limit	Margin	Raw	Antenna	Cable	Pre	Correction
Channel	(MHz)	Level	Mode	Pol	(dBuV/m)	(dB)	Value	Factor	Factor	amplifier	Factor
		(dBuV/m)					(dBuV)	(dB/m)	(dB)	(dB)	(dB/m)
	5650.00	38.75	PK	H	68.30	29.55	40.98	33.20	5.78	41.21	-2.23
	5700.00	40.62	PK	H	105.30	64.68	42.96	33.40	5.93	41.67	-2.34
	5720.00	42.35	PK	H	110.90	68.55	45.13	33.42	6.04	42.24	-2.78
	5725.00	40.23	PK	H	122.30	82.07	43.01	33.42	6.04	42.24	-2.78
149.00	5745.00	62.27	PK	H	122.30	60.03	65.05	33.42	6.04	42.24	-2.78
(5745MHz)	5850.00	46.72	PK	H	122.30	75.58	49.12	33.90	6.49	42.79	-2.40
	5855.00	45.93	PK	H	110.90	64.97	48.22	33.90	6.74	42.93	-2.29
	5875.00	45.99	PK	H	105.30	59.31	48.09	33.97	7.02	43.09	-2.10
	5925.00	46.49	PK	H	68.30	21.81	48.26	34.17	7.33	43.27	-1.77
149.00	11490.00	53.62	PK	H	68.30	14.68	49.14	39.02	10.91	45.45	4.48
(5745MHz)	--	--	AV	H	--	--		--	--	--	--
	5650.00	39.03	PK	H	68.30	29.27	41.26	33.20	5.78	41.21	-2.23
	5700.00	40.89	PK	H	105.30	64.41	43.23	33.40	5.93	41.67	-2.34
	5720.00	42.47	PK	H	110.90	68.43	45.25	33.42	6.04	42.24	-2.78
157.00	5785.00	59.30	PK	H	122.30	63.00	62.08	33.42	6.04	42.24	-2.78
(5785MHz)	5850.00	45.59	PK	H	122.30	76.71	47.99	33.90	6.49	42.79	-2.40
	5855.00	45.89	PK	H	110.90	65.01	48.18	33.90	6.74	42.93	-2.29
	5875.00	45.96	PK	H	105.30	59.34	48.06	33.97	7.02	43.09	-2.10
	5925.00	46.23	PK	H	68.30	22.07	48.00	34.17	7.33	43.27	-1.77
157.00	11570.00	53.49	PK	H	68.30	14.81	49.04	38.93	10.95	45.43	4.45
(5785MHz)	--	--	AV	H	--	--	--	--	--	--	--
	5650.00	39.84	PK	H	68.30	28.46	42.07	33.20	5.78	41.21	-2.23
	5700.00	40.65	PK	H	105.30	64.65	42.99	33.40	5.93	41.67	-2.34
	5720.00	42.34	PK	H	110.90	68.56	45.12	33.42	6.04	42.24	-2.78
165.00	5825.00	60.16	PK	H	122.30	62.14	62.94	33.42	6.04	42.24	-2.78
(5825MHz)	5850.00	45.61	PK	H	122.30	76.69	48.01	33.90	6.49	42.79	-2.40
	5855.00	45.79	PK	H	110.90	65.11	48.08	33.90	6.74	42.93	-2.29
	5875.00	46.11	PK	H	105.30	59.19	48.21	33.97	7.02	43.09	-2.10
	5925.00	46.42	PK	H	68.30	21.88	48.19	34.17	7.33	43.27	-1.77
165.00	11650.00	52.82	PK	H	68.30	15.48	48.24	38.83	11.16	45.41	4.58
(5825MHz)	--	--	AV	H	--	--	--	--	--	--	--

Tested	Frequency	Emission	Detector	ANT	Limit	Margin	Raw	Antenna	Cable	Pre	Correction
Channel	(MHz)	Level	Mode	Pol	(dBuV/m)	(dB)	Value	Factor	Factor	amplifier	Factor
		(dBuV/m)					(dBuV)	(dB/m)	(dB)	(dB)	(dB/m)
	5650.00	39.74	PK	V	68.30	28.56	41.97	33.20	5.78	41.21	-2.23
	5700.00	40.82	PK	V	105.30	64.48	43.16	33.40	5.93	41.67	-2.34
	5720.00	43.30	PK	V	110.90	67.60	46.08	33.42	6.04	42.24	-2.78
	5725.00	43.46	PK	V	122.30	78.84	46.24	33.42	6.04	42.24	-2.78
149.00	5745.00	61.20	PK	V	122.30	61.10	63.98	33.42	6.04	42.24	-2.78
(5745MHz)	5850.00	47.88	PK	V	122.30	74.42	50.28	33.90	6.49	42.79	-2.40
	5855.00	45.90	PK	V	110.90	65.00	48.19	33.90	6.74	42.93	-2.29
	5875.00	46.01	PK	V	105.30	59.29	48.11	33.97	7.02	43.09	-2.10
	5925.00	46.34	PK	V	68.30	21.96	48.11	34.17	7.33	43.27	-1.77
149.00	11490.00	52.56	PK	V	68.30	15.74	48.08	39.02	10.91	45.45	4.48
(5745MHz)	--	--	AV	V	--	--		--	--	--	--
	5650.00	38.83	PK	V	68.30	29.47	41.06	33.20	5.78	41.21	-2.23
	5700.00	40.88	PK	V	105.30	64.42	43.22	33.40	5.93	41.67	-2.34
	5720.00	43.24	PK	V	110.90	67.66	46.02	33.42	6.04	42.24	-2.78
157.00	5785.00	61.23	PK	V	122.30	61.07	64.01	33.42	6.04	42.24	-2.78
(5785MHz)	5850.00	48.65	PK	V	122.30	73.65	51.05	33.90	6.49	42.79	-2.40
	5855.00	45.82	PK	V	110.90	65.08	48.11	33.90	6.74	42.93	-2.29
	5875.00	45.85	PK	V	105.30	59.45	47.95	33.97	7.02	43.09	-2.10
	5925.00	46.42	PK	V	68.30	21.88	48.19	34.17	7.33	43.27	-1.77
157.00	11570.00	52.65	PK	V	68.30	15.65	48.20	38.93	10.95	45.43	4.45
(5785MHz)	--	--	AV	V	--	--	--	--	--	--	--
	5650.00	39.72	PK	V	68.30	28.58	41.95	33.20	5.78	41.21	-2.23
	5700.00	41.94	PK	V	105.30	63.36	44.28	33.40	5.93	41.67	-2.34
	5720.00	43.25	PK	V	110.90	67.65	46.03	33.42	6.04	42.24	-2.78
165.00	5825.00	61.40	PK	V	122.30	60.90	64.18	33.42	6.04	42.24	-2.78
(5825MHz)	5850.00	48.76	PK	V	122.30	73.54	51.16	33.90	6.49	42.79	-2.40
	5855.00	45.75	PK	V	110.90	65.15	48.04	33.90	6.74	42.93	-2.29
	5875.00	46.01	PK	V	105.30	59.29	48.11	33.97	7.02	43.09	-2.10
	5925.00	46.39	PK	V	68.30	21.91	48.16	34.17	7.33	43.27	-1.77
165.00	11650.00	52.67	PK	V	68.30	15.63	48.09	38.83	11.16	45.41	4.58
(5825MHz)	--	--	AV	V	--	--	--	--	--	--	--

Model: QS16

U-NII 3 & 802.11a Mode (above 1GHz)

Tested	Frequency	Emission	Detector	ANT	Limit	Margin	Raw	Antenna	Cable	Pre	Correction
Channel	(MHz)	Level	Mode	Pol	(dBuV/m)	(dB)	Value	Factor	Factor	amplifier	Factor
		(dBuV/m)					(dBuV)	(dB/m)	(dB)	(dB)	(dB/m)
	5650.00	38.89	PK	H	68.30	29.41	41.12	33.20	5.78	41.21	-2.23
	5700.00	40.77	PK	H	105.30	64.53	43.11	33.40	5.93	41.67	-2.34
	5720.00	42.50	PK	H	110.90	68.40	45.28	33.42	6.04	42.24	-2.78
	5725.00	40.41	PK	H	122.30	81.89	43.19	33.42	6.04	42.24	-2.78
149.00	5745.00	61.24	PK	H	122.30	61.06	64.02	33.42	6.04	42.24	-2.78
(5745MHz)	5850.00	45.74	PK	H	122.30	76.56	48.14	33.90	6.49	42.79	-2.40
	5855.00	45.98	PK	H	110.90	64.92	48.27	33.90	6.74	42.93	-2.29
	5875.00	46.05	PK	H	105.30	59.25	48.15	33.97	7.02	43.09	-2.10
	5925.00	46.38	PK	H	68.30	21.92	48.15	34.17	7.33	43.27	-1.77
149.00	11490.00	52.77	PK	H	68.30	15.53	48.29	39.02	10.91	45.45	4.48
(5745MHz)	--	--	AV	H	--	--		--	--	--	--
	5650.00	39.90	PK	H	68.30	28.40	42.13	33.20	5.78	41.21	-2.23
	5700.00	40.64	PK	H	105.30	64.66	42.98	33.40	5.93	41.67	-2.34
	5720.00	43.46	PK	H	110.90	67.44	46.24	33.42	6.04	42.24	-2.78
157.00	5785.00	60.28	PK	H	122.30	62.02	63.06	33.42	6.04	42.24	-2.78
(5785MHz)	5850.00	47.75	PK	H	122.30	74.55	50.15	33.90	6.49	42.79	-2.40
	5855.00	45.98	PK	H	110.90	64.92	48.27	33.90	6.74	42.93	-2.29
	5875.00	46.08	PK	H	105.30	59.22	48.18	33.97	7.02	43.09	-2.10
	5925.00	46.46	PK	H	68.30	21.84	48.23	34.17	7.33	43.27	-1.77
157.00	11570.00	53.56	PK	H	68.30	14.74	49.11	38.93	10.95	45.43	4.45
(5785MHz)	--	--	AV	H	--	--	--	--	--	--	--
	5650.00	39.79	PK	H	68.30	28.51	42.02	33.20	5.78	41.21	-2.23
	5700.00	41.73	PK	H	105.30	63.57	44.07	33.40	5.93	41.67	-2.34
	5720.00	43.30	PK	H	110.90	67.60	46.08	33.42	6.04	42.24	-2.78
165.00	5825.00	60.48	PK	H	122.30	61.82	63.26	33.42	6.04	42.24	-2.78
(5825MHz)	5850.00	48.78	PK	H	122.30	73.52	51.18	33.90	6.49	42.79	-2.40
	5855.00	45.93	PK	H	110.90	64.97	48.22	33.90	6.74	42.93	-2.29
	5875.00	46.08	PK	H	105.30	59.22	48.18	33.97	7.02	43.09	-2.10
	5925.00	46.22	PK	H	68.30	22.08	47.99	34.17	7.33	43.27	-1.77
165.00	11650.00	52.61	PK	H	68.30	15.69	48.03	38.83	11.16	45.41	4.58
(5825MHz)	--	--	AV	H	--	--	--	--	--	--	--

Tested	Frequency	Emission	Detector	ANT	Limit	Margin	Raw	Antenna	Cable	Pre	Correction
Channel	(MHz)	Level	Mode	Pol	(dBuV/m)	(dB)	Value	Factor	Factor	amplifier	Factor
		(dBuV/m)					(dBuV)	(dB/m)	(dB)	(dB)	(dB/m)
	5650.00	39.89	PK	V	68.30	28.41	42.12	33.20	5.78	41.21	-2.23
	5700.00	41.69	PK	V	105.30	63.61	44.03	33.40	5.93	41.67	-2.34
	5720.00	42.41	PK	V	110.90	68.49	45.19	33.42	6.04	42.24	-2.78
	5725.00	43.19	PK	V	122.30	79.11	45.97	33.42	6.04	42.24	-2.78
149.00	5745.00	65.40	PK	V	122.30	56.90	68.18	33.42	6.04	42.24	-2.78
(5745MHz)	5850.00	46.89	PK	V	122.30	75.41	49.29	33.90	6.49	42.79	-2.40
	5855.00	45.81	PK	V	110.90	65.09	48.10	33.90	6.74	42.93	-2.29
	5875.00	45.86	PK	V	105.30	59.44	47.96	33.97	7.02	43.09	-2.10
	5925.00	46.27	PK	V	68.30	22.03	48.04	34.17	7.33	43.27	-1.77
149.00	11490.00	53.49	PK	V	68.30	14.81	49.01	39.02	10.91	45.45	4.48
(5745MHz)	--	--	AV	V	--	--		--	--	--	--
	5650.00	38.89	PK	V	68.30	29.41	41.12	33.20	5.78	41.21	-2.23
	5700.00	40.64	PK	V	105.30	64.66	42.98	33.40	5.93	41.67	-2.34
	5720.00	42.27	PK	V	110.90	68.63	45.05	33.42	6.04	42.24	-2.78
157.00	5785.00	60.35	PK	V	122.30	61.95	63.13	33.42	6.04	42.24	-2.78
(5785MHz)	5850.00	46.52	PK	V	122.30	75.78	48.92	33.90	6.49	42.79	-2.40
	5855.00	45.84	PK	V	110.90	65.06	48.13	33.90	6.74	42.93	-2.29
	5875.00	46.05	PK	V	105.30	59.25	48.15	33.97	7.02	43.09	-2.10
	5925.00	46.51	PK	V	68.30	21.79	48.28	34.17	7.33	43.27	-1.77
157.00	11570.00	53.37	PK	V	68.30	14.93	48.92	38.93	10.95	45.43	4.45
(5785MHz)	--	--	AV	V	--	--	--	--	--	--	--
	5650.00	38.95	PK	V	68.30	29.35	41.18	33.20	5.78	41.21	-2.23
	5700.00	40.79	PK	V	105.30	64.51	43.13	33.40	5.93	41.67	-2.34
	5720.00	42.44	PK	V	110.90	68.46	45.22	33.42	6.04	42.24	-2.78
165.00	5825.00	61.26	PK	V	122.30	61.04	64.04	33.42	6.04	42.24	-2.78
(5825MHz)	5850.00	45.61	PK	V	122.30	76.69	48.01	33.90	6.49	42.79	-2.40
	5855.00	45.74	PK	V	110.90	65.16	48.03	33.90	6.74	42.93	-2.29
	5875.00	46.10	PK	V	105.30	59.20	48.20	33.97	7.02	43.09	-2.10
	5925.00	46.22	PK	V	68.30	22.08	47.99	34.17	7.33	43.27	-1.77
165.00	11650.00	52.48	PK	V	68.30	15.82	47.90	38.83	11.16	45.41	4.58
(5825MHz)	--	--	AV	V	--	--	--	--	--	--	--

Model: QS13

U-NII 3 & 802.11a Mode (above 1GHz)

Tested	Frequency	Emission	Detector	ANT	Limit	Margin	Raw	Antenna	Cable	Pre	Correction
Channel	(MHz)	Level	Mode	Pol	(dBuV/m)	(dB)	Value	Factor	Factor	amplifier	Factor
		(dBuV/m)					(dBuV)	(dB/m)	(dB)	(dB)	(dB/m)
	5650.00	38.78	PK	H	68.30	29.52	41.01	33.20	5.78	41.21	-2.23
	5700.00	41.62	PK	H	105.30	63.68	43.96	33.40	5.93	41.67	-2.34
	5720.00	42.17	PK	H	110.90	68.73	44.95	33.42	6.04	42.24	-2.78
	5725.00	41.40	PK	H	122.30	80.90	44.18	33.42	6.04	42.24	-2.78
149.00	5745.00	63.45	PK	H	122.30	58.85	66.23	33.42	6.04	42.24	-2.78
(5745MHz)	5850.00	48.64	PK	H	122.30	73.66	51.04	33.90	6.49	42.79	-2.40
	5855.00	45.96	PK	H	110.90	64.94	48.25	33.90	6.74	42.93	-2.29
	5875.00	46.19	PK	H	105.30	59.11	48.29	33.97	7.02	43.09	-2.10
	5925.00	46.26	PK	H	68.30	22.04	48.03	34.17	7.33	43.27	-1.77
149.00	11490.00	53.48	PK	H	68.30	14.82	49.00	39.02	10.91	45.45	4.48
(5745MHz)	--	--	AV	H	--	--		--	--	--	--
	5650.00	40.03	PK	H	68.30	28.27	42.26	33.20	5.78	41.21	-2.23
	5700.00	41.78	PK	H	105.30	63.52	44.12	33.40	5.93	41.67	-2.34
	5720.00	43.43	PK	H	110.90	67.47	46.21	33.42	6.04	42.24	-2.78
157.00	5785.00	62.41	PK	H	122.30	59.89	65.19	33.42	6.04	42.24	-2.78
(5785MHz)	5850.00	48.53	PK	H	122.30	73.77	50.93	33.90	6.49	42.79	-2.40
	5855.00	45.72	PK	H	110.90	65.18	48.01	33.90	6.74	42.93	-2.29
	5875.00	46.00	PK	H	105.30	59.30	48.10	33.97	7.02	43.09	-2.10
	5925.00	46.32	PK	H	68.30	21.98	48.09	34.17	7.33	43.27	-1.77
157.00	11570.00	53.54	PK	H	68.30	14.76	49.09	38.93	10.95	45.43	4.45
(5785MHz)	--	--	AV	H	--	--	--	--	--	--	--
	5650.00	39.77	PK	H	68.30	28.53	42.00	33.20	5.78	41.21	-2.23
	5700.00	41.82	PK	H	105.30	63.48	44.16	33.40	5.93	41.67	-2.34
	5720.00	43.38	PK	H	110.90	67.52	46.16	33.42	6.04	42.24	-2.78
165.00	5825.00	61.41	PK	H	122.30	60.89	64.19	33.42	6.04	42.24	-2.78
(5825MHz)	5850.00	45.79	PK	H	122.30	76.51	48.19	33.90	6.49	42.79	-2.40
	5855.00	45.80	PK	H	110.90	65.10	48.09	33.90	6.74	42.93	-2.29
	5875.00	45.99	PK	H	105.30	59.31	48.09	33.97	7.02	43.09	-2.10
	5925.00	46.48	PK	H	68.30	21.82	48.25	34.17	7.33	43.27	-1.77
165.00	11650.00	52.76	PK	H	68.30	15.54	48.18	38.83	11.16	45.41	4.58
(5825MHz)	--	--	AV	H	--	--	--	--	--	--	--

Tested	Frequency	Emission	Detector	ANT	Limit	Margin	Raw	Antenna	Cable	Pre	Correction
Channel	(MHz)	Level	Mode	Pol	(dBuV/m)	(dB)	Value	Factor	Factor	amplifier	Factor
		(dBuV/m)					(dBuV)	(dB/m)	(dB)	(dB)	(dB/m)
	5650.00	39.79	PK	V	68.30	28.51	42.02	33.20	5.78	41.21	-2.23
	5700.00	41.82	PK	V	105.30	63.48	44.16	33.40	5.93	41.67	-2.34
	5720.00	42.52	PK	V	110.90	68.38	45.30	33.42	6.04	42.24	-2.78
	5725.00	43.49	PK	V	122.30	78.81	46.27	33.42	6.04	42.24	-2.78
149.00	5745.00	62.50	PK	V	122.30	59.80	65.28	33.42	6.04	42.24	-2.78
(5745MHz)	5850.00	47.63	PK	V	122.30	74.67	50.03	33.90	6.49	42.79	-2.40
	5855.00	45.89	PK	V	110.90	65.01	48.18	33.90	6.74	42.93	-2.29
	5875.00	46.18	PK	V	105.30	59.12	48.28	33.97	7.02	43.09	-2.10
	5925.00	46.47	PK	V	68.30	21.83	48.24	34.17	7.33	43.27	-1.77
149.00	11490.00	52.62	PK	V	68.30	15.68	48.14	39.02	10.91	45.45	4.48
(5745MHz)	--	--	AV	V	--	--		--	--	--	--
	5650.00	38.80	PK	V	68.30	29.50	41.03	33.20	5.78	41.21	-2.23
	5700.00	41.73	PK	V	105.30	63.57	44.07	33.40	5.93	41.67	-2.34
	5720.00	43.26	PK	V	110.90	67.64	46.04	33.42	6.04	42.24	-2.78
157.00	5785.00	62.48	PK	V	122.30	59.82	65.26	33.42	6.04	42.24	-2.78
(5785MHz)	5850.00	45.63	PK	V	122.30	76.67	48.03	33.90	6.49	42.79	-2.40
	5855.00	45.91	PK	V	110.90	64.99	48.20	33.90	6.74	42.93	-2.29
	5875.00	46.00	PK	V	105.30	59.30	48.10	33.97	7.02	43.09	-2.10
	5925.00	46.40	PK	V	68.30	21.90	48.17	34.17	7.33	43.27	-1.77
157.00	11570.00	52.63	PK	V	68.30	15.67	48.18	38.93	10.95	45.43	4.45
(5785MHz)	--	--	AV	V	--	--	--	--	--	--	--
	5650.00	39.02	PK	V	68.30	29.28	41.25	33.20	5.78	41.21	-2.23
	5700.00	41.66	PK	V	105.30	63.64	44.00	33.40	5.93	41.67	-2.34
	5720.00	42.38	PK	V	110.90	68.52	45.16	33.42	6.04	42.24	-2.78
165.00	5825.00	63.35	PK	V	122.30	58.95	66.13	33.42	6.04	42.24	-2.78
(5825MHz)	5850.00	45.67	PK	V	122.30	76.63	48.07	33.90	6.49	42.79	-2.40
	5855.00	45.76	PK	V	110.90	65.14	48.05	33.90	6.74	42.93	-2.29
	5875.00	46.17	PK	V	105.30	59.13	48.27	33.97	7.02	43.09	-2.10
	5925.00	46.40	PK	V	68.30	21.90	48.17	34.17	7.33	43.27	-1.77
165.00	11650.00	52.81	PK	V	68.30	15.49	48.23	38.83	11.16	45.41	4.58
(5825MHz)	--	--	AV	V	--	--	--	--	--	--	--

Model: QS17

U-NII 3 & 802.11a Mode (above 1GHz)

Tested	Frequency	Emission	Detector	ANT	Limit	Margin	Raw	Antenna	Cable	Pre	Correction
Channel	(MHz)	Level	Mode	Pol	(dBuV/m)	(dB)	Value	Factor	Factor	amplifier	Factor
		(dBuV/m)					(dBuV)	(dB/m)	(dB)	(dB)	(dB/m)
	5650.00	38.97	PK	H	68.30	29.33	41.20	33.20	5.78	41.21	-2.23
	5700.00	40.70	PK	H	105.30	64.60	43.04	33.40	5.93	41.67	-2.34
	5720.00	42.39	PK	H	110.90	68.51	45.17	33.42	6.04	42.24	-2.78
	5725.00	44.28	PK	H	122.30	78.02	47.06	33.42	6.04	42.24	-2.78
149.00	5745.00	61.32	PK	H	122.30	60.98	64.10	33.42	6.04	42.24	-2.78
(5745MHz)	5850.00	48.79	PK	H	122.30	73.51	51.19	33.90	6.49	42.79	-2.40
	5855.00	45.75	PK	H	110.90	65.15	48.04	33.90	6.74	42.93	-2.29
	5875.00	46.07	PK	H	105.30	59.23	48.17	33.97	7.02	43.09	-2.10
	5925.00	46.52	PK	H	68.30	21.78	48.29	34.17	7.33	43.27	-1.77
149.00	11490.00	52.44	PK	H	68.30	15.86	47.96	39.02	10.91	45.45	4.48
(5745MHz)	--	--	AV	H	--	--		--	--	--	--
	5650.00	38.84	PK	H	68.30	29.46	41.07	33.20	5.78	41.21	-2.23
	5700.00	41.67	PK	H	105.30	63.63	44.01	33.40	5.93	41.67	-2.34
	5720.00	43.44	PK	H	110.90	67.46	46.22	33.42	6.04	42.24	-2.78
157.00	5785.00	61.42	PK	H	122.30	60.88	64.20	33.42	6.04	42.24	-2.78
(5785MHz)	5850.00	47.81	PK	H	122.30	74.49	50.21	33.90	6.49	42.79	-2.40
	5855.00	45.81	PK	H	110.90	65.09	48.10	33.90	6.74	42.93	-2.29
	5875.00	46.03	PK	H	105.30	59.27	48.13	33.97	7.02	43.09	-2.10
	5925.00	46.20	PK	H	68.30	22.10	47.97	34.17	7.33	43.27	-1.77
157.00	11570.00	53.42	PK	H	68.30	14.88	48.97	38.93	10.95	45.43	4.45
(5785MHz)	--	--	AV	H	--	--	--	--	--	--	--
	5650.00	38.73	PK	H	68.30	29.57	40.96	33.20	5.78	41.21	-2.23
	5700.00	40.82	PK	H	105.30	64.48	43.16	33.40	5.93	41.67	-2.34
	5720.00	42.38	PK	H	110.90	68.52	45.16	33.42	6.04	42.24	-2.78
165.00	5825.00	59.30	PK	H	122.30	63.00	62.08	33.42	6.04	42.24	-2.78
(5825MHz)	5850.00	45.74	PK	H	122.30	76.56	48.14	33.90	6.49	42.79	-2.40
	5855.00	45.93	PK	H	110.90	64.97	48.22	33.90	6.74	42.93	-2.29
	5875.00	45.94	PK	H	105.30	59.36	48.04	33.97	7.02	43.09	-2.10
	5925.00	46.28	PK	H	68.30	22.02	48.05	34.17	7.33	43.27	-1.77
165.00	11650.00	52.62	PK	H	68.30	15.68	48.04	38.83	11.16	45.41	4.58
(5825MHz)	--	--	AV	H	--	--	--	--	--	--	--

Tested	Frequency	Emission	Detector	ANT	Limit	Margin	Raw	Antenna	Cable	Pre	Correction
Channel	(MHz)	Level	Mode	Pol	(dBuV/m)	(dB)	Value	Factor	Factor	amplifier	Factor
		(dBuV/m)					(dBuV)	(dB/m)	(dB)	(dB)	(dB/m)
	5650.00	39.97	PK	V	68.30	28.33	42.20	33.20	5.78	41.21	-2.23
	5700.00	40.88	PK	V	105.30	64.42	43.22	33.40	5.93	41.67	-2.34
	5720.00	43.31	PK	V	110.90	67.59	46.09	33.42	6.04	42.24	-2.78
	5725.00	41.44	PK	V	122.30	80.86	44.22	33.42	6.04	42.24	-2.78
149.00	5745.00	64.46	PK	V	122.30	57.84	67.24	33.42	6.04	42.24	-2.78
(5745MHz)	5850.00	46.76	PK	V	122.30	75.54	49.16	33.90	6.49	42.79	-2.40
	5855.00	45.75	PK	V	110.90	65.15	48.04	33.90	6.74	42.93	-2.29
	5875.00	46.10	PK	V	105.30	59.20	48.20	33.97	7.02	43.09	-2.10
	5925.00	46.20	PK	V	68.30	22.10	47.97	34.17	7.33	43.27	-1.77
149.00	11490.00	52.70	PK	V	68.30	15.60	48.22	39.02	10.91	45.45	4.48
(5745MHz)	--	--	AV	V	--	--		--	--	--	--
	5650.00	38.81	PK	V	68.30	29.49	41.04	33.20	5.78	41.21	-2.23
	5700.00	40.67	PK	V	105.30	64.63	43.01	33.40	5.93	41.67	-2.34
	5720.00	43.17	PK	V	110.90	67.73	45.95	33.42	6.04	42.24	-2.78
157.00	5785.00	62.40	PK	V	122.30	59.90	65.18	33.42	6.04	42.24	-2.78
(5785MHz)	5850.00	45.68	PK	V	122.30	76.62	48.08	33.90	6.49	42.79	-2.40
	5855.00	45.96	PK	V	110.90	64.94	48.25	33.90	6.74	42.93	-2.29
	5875.00	45.98	PK	V	105.30	59.32	48.08	33.97	7.02	43.09	-2.10
	5925.00	46.35	PK	V	68.30	21.95	48.12	34.17	7.33	43.27	-1.77
157.00	11570.00	52.53	PK	V	68.30	15.77	48.08	38.93	10.95	45.43	4.45
(5785MHz)	--	--	AV	V	--	--	--	--	--	--	--
	5650.00	38.87	PK	V	68.30	29.43	41.10	33.20	5.78	41.21	-2.23
	5700.00	41.96	PK	V	105.30	63.34	44.30	33.40	5.93	41.67	-2.34
	5720.00	43.32	PK	V	110.90	67.58	46.10	33.42	6.04	42.24	-2.78
165.00	5825.00	62.19	PK	V	122.30	60.11	64.97	33.42	6.04	42.24	-2.78
(5825MHz)	5850.00	47.67	PK	V	122.30	74.63	50.07	33.90	6.49	42.79	-2.40
	5855.00	45.91	PK	V	110.90	64.99	48.20	33.90	6.74	42.93	-2.29
	5875.00	46.04	PK	V	105.30	59.26	48.14	33.97	7.02	43.09	-2.10
	5925.00	46.48	PK	V	68.30	21.82	48.25	34.17	7.33	43.27	-1.77
165.00	11650.00	52.73	PK	V	68.30	15.57	48.15	38.83	11.16	45.41	4.58
(5825MHz)	--	--	AV	V	--	--	--	--	--	--	--

Model: TW39

U-NII 3 & 802.11a Mode (above 1GHz)

Tested	Frequency	Emission	Detector	ANT	Limit	Margin	Raw	Antenna	Cable	Pre	Correction
Channel	(MHz)	Level	Mode	Pol	(dBuV/m)	(dB)	Value	Factor	Factor	amplifier	Factor
		(dBuV/m)					(dBuV)	(dB/m)	(dB)	(dB)	(dB/m)
	5650.00	38.99	PK	H	68.30	29.31	41.22	33.20	5.78	41.21	-2.23
	5700.00	41.72	PK	H	105.30	63.58	44.06	33.40	5.93	41.67	-2.34
	5720.00	43.24	PK	H	110.90	67.66	46.02	33.42	6.04	42.24	-2.78
	5725.00	41.35	PK	H	122.30	80.95	44.13	33.42	6.04	42.24	-2.78
149.00	5745.00	62.27	PK	H	122.30	60.03	65.05	33.42	6.04	42.24	-2.78
(5745MHz)	5850.00	48.90	PK	H	122.30	73.40	51.30	33.90	6.49	42.79	-2.40
	5855.00	45.67	PK	H	110.90	65.23	47.96	33.90	6.74	42.93	-2.29
	5875.00	45.87	PK	H	105.30	59.43	47.97	33.97	7.02	43.09	-2.10
	5925.00	46.35	PK	H	68.30	21.95	48.12	34.17	7.33	43.27	-1.77
149.00	11490.00	52.46	PK	H	68.30	15.84	47.98	39.02	10.91	45.45	4.48
(5745MHz)	--	--	AV	H	--	--		--	--	--	--
	5650.00	39.85	PK	H	68.30	28.45	42.08	33.20	5.78	41.21	-2.23
	5700.00	40.77	PK	H	105.30	64.53	43.11	33.40	5.93	41.67	-2.34
	5720.00	43.23	PK	H	110.90	67.67	46.01	33.42	6.04	42.24	-2.78
157.00	5785.00	60.21	PK	H	122.30	62.09	62.99	33.42	6.04	42.24	-2.78
(5785MHz)	5850.00	46.73	PK	H	122.30	75.57	49.13	33.90	6.49	42.79	-2.40
	5855.00	45.72	PK	H	110.90	65.18	48.01	33.90	6.74	42.93	-2.29
	5875.00	46.07	PK	H	105.30	59.23	48.17	33.97	7.02	43.09	-2.10
	5925.00	46.35	PK	H	68.30	21.95	48.12	34.17	7.33	43.27	-1.77
157.00	11570.00	53.55	PK	H	68.30	14.75	49.10	38.93	10.95	45.43	4.45
(5785MHz)	--	--	AV	H	--	--	--	--	--	--	--
	5650.00	39.68	PK	H	68.30	28.62	41.91	33.20	5.78	41.21	-2.23
	5700.00	40.87	PK	H	105.30	64.43	43.21	33.40	5.93	41.67	-2.34
	5720.00	42.49	PK	H	110.90	68.41	45.27	33.42	6.04	42.24	-2.78
165.00	5825.00	59.16	PK	H	122.30	63.14	61.94	33.42	6.04	42.24	-2.78
(5825MHz)	5850.00	48.59	PK	H	122.30	73.71	50.99	33.90	6.49	42.79	-2.40
	5855.00	45.90	PK	H	110.90	65.00	48.19	33.90	6.74	42.93	-2.29
	5875.00	45.95	PK	H	105.30	59.35	48.05	33.97	7.02	43.09	-2.10
	5925.00	46.42	PK	H	68.30	21.88	48.19	34.17	7.33	43.27	-1.77
165.00	11650.00	52.83	PK	H	68.30	15.47	48.25	38.83	11.16	45.41	4.58
(5825MHz)	--	--	AV	H	--	--	--	--	--	--	--

Tested	Frequency	Emission	Detector	ANT	Limit	Margin	Raw	Antenna	Cable	Pre	Correction
Channel	(MHz)	Level	Mode	Pol	(dBuV/m)	(dB)	Value	Factor	Factor	amplifier	Factor
		(dBuV/m)					(dBuV)	(dB/m)	(dB)	(dB)	(dB/m)
	5650.00	39.87	PK	V	68.30	28.43	42.10	33.20	5.78	41.21	-2.23
	5700.00	41.88	PK	V	105.30	63.42	44.22	33.40	5.93	41.67	-2.34
	5720.00	42.34	PK	V	110.90	68.56	45.12	33.42	6.04	42.24	-2.78
	5725.00	45.27	PK	V	122.30	77.03	48.05	33.42	6.04	42.24	-2.78
149.00	5745.00	62.37	PK	V	122.30	59.93	65.15	33.42	6.04	42.24	-2.78
(5745MHz)	5850.00	46.78	PK	V	122.30	75.52	49.18	33.90	6.49	42.79	-2.40
	5855.00	45.97	PK	V	110.90	64.93	48.26	33.90	6.74	42.93	-2.29
	5875.00	46.10	PK	V	105.30	59.20	48.20	33.97	7.02	43.09	-2.10
	5925.00	46.38	PK	V	68.30	21.92	48.15	34.17	7.33	43.27	-1.77
149.00	11490.00	52.53	PK	V	68.30	15.77	48.05	39.02	10.91	45.45	4.48
(5745MHz)	--	--	AV	V	--	--		--	--	--	--
	5650.00	39.83	PK	V	68.30	28.47	42.06	33.20	5.78	41.21	-2.23
	5700.00	41.64	PK	V	105.30	63.66	43.98	33.40	5.93	41.67	-2.34
	5720.00	42.36	PK	V	110.90	68.54	45.14	33.42	6.04	42.24	-2.78
157.00	5785.00	60.37	PK	V	122.30	61.93	63.15	33.42	6.04	42.24	-2.78
(5785MHz)	5850.00	46.70	PK	V	122.30	75.60	49.10	33.90	6.49	42.79	-2.40
	5855.00	45.82	PK	V	110.90	65.08	48.11	33.90	6.74	42.93	-2.29
	5875.00	46.07	PK	V	105.30	59.23	48.17	33.97	7.02	43.09	-2.10
	5925.00	46.32	PK	V	68.30	21.98	48.09	34.17	7.33	43.27	-1.77
157.00	11570.00	52.50	PK	V	68.30	15.80	48.05	38.93	10.95	45.43	4.45
(5785MHz)	--	--	AV	V	--	--	--	--	--	--	--
	5650.00	39.81	PK	V	68.30	28.49	42.04	33.20	5.78	41.21	-2.23
	5700.00	41.80	PK	V	105.30	63.50	44.14	33.40	5.93	41.67	-2.34
	5720.00	43.41	PK	V	110.90	67.49	46.19	33.42	6.04	42.24	-2.78
165.00	5825.00	61.51	PK	V	122.30	60.79	64.29	33.42	6.04	42.24	-2.78
(5825MHz)	5850.00	45.63	PK	V	122.30	76.67	48.03	33.90	6.49	42.79	-2.40
	5855.00	45.84	PK	V	110.90	65.06	48.13	33.90	6.74	42.93	-2.29
	5875.00	45.98	PK	V	105.30	59.32	48.08	33.97	7.02	43.09	-2.10
	5925.00	46.19	PK	V	68.30	22.11	47.96	34.17	7.33	43.27	-1.77
165.00	11650.00	52.53	PK	V	68.30	15.77	47.95	38.83	11.16	45.41	4.58
(5825MHz)	--	--	AV	V	--	--	--	--	--	--	--

Model: TW38

U-NII 3 & 802.11a Mode (above 1GHz)

Tested	Frequency	Emission	Detector	ANT	Limit	Margin	Raw	Antenna	Cable	Pre	Correction
Channel	(MHz)	Level	Mode	Pol	(dBuV/m)	(dB)	Value	Factor	Factor	amplifier	Factor
		(dBuV/m)					(dBuV)	(dB/m)	(dB)	(dB)	(dB/m)
	5650.00	38.74	PK	H	68.30	29.56	40.97	33.20	5.78	41.21	-2.23
	5700.00	40.90	PK	H	105.30	64.40	43.24	33.40	5.93	41.67	-2.34
	5720.00	42.31	PK	H	110.90	68.59	45.09	33.42	6.04	42.24	-2.78
	5725.00	40.14	PK	H	122.30	82.16	42.92	33.42	6.04	42.24	-2.78
149.00	5745.00	61.40	PK	H	122.30	60.90	64.18	33.42	6.04	42.24	-2.78
(5745MHz)	5850.00	46.64	PK	H	122.30	75.66	49.04	33.90	6.49	42.79	-2.40
	5855.00	45.67	PK	H	110.90	65.23	47.96	33.90	6.74	42.93	-2.29
	5875.00	45.93	PK	H	105.30	59.37	48.03	33.97	7.02	43.09	-2.10
	5925.00	46.19	PK	H	68.30	22.11	47.96	34.17	7.33	43.27	-1.77
149.00	11490.00	53.49	PK	H	68.30	14.81	49.01	39.02	10.91	45.45	4.48
(5745MHz)	--	--	AV	H	--	--		--	--	--	--
	5650.00	39.98	PK	H	68.30	28.32	42.21	33.20	5.78	41.21	-2.23
	5700.00	41.79	PK	H	105.30	63.51	44.13	33.40	5.93	41.67	-2.34
	5720.00	42.22	PK	H	110.90	68.68	45.00	33.42	6.04	42.24	-2.78
157.00	5785.00	62.30	PK	H	122.30	60.00	65.08	33.42	6.04	42.24	-2.78
(5785MHz)	5850.00	45.53	PK	H	122.30	76.77	47.93	33.90	6.49	42.79	-2.40
	5855.00	45.84	PK	H	110.90	65.06	48.13	33.90	6.74	42.93	-2.29
	5875.00	46.02	PK	H	105.30	59.28	48.12	33.97	7.02	43.09	-2.10
	5925.00	46.29	PK	H	68.30	22.01	48.06	34.17	7.33	43.27	-1.77
157.00	11570.00	52.56	PK	H	68.30	15.74	48.11	38.93	10.95	45.43	4.45
(5785MHz)	--	--	AV	H	--	--	--	--	--	--	--
	5650.00	39.87	PK	H	68.30	28.43	42.10	33.20	5.78	41.21	-2.23
	5700.00	41.80	PK	H	105.30	63.50	44.14	33.40	5.93	41.67	-2.34
	5720.00	43.47	PK	H	110.90	67.43	46.25	33.42	6.04	42.24	-2.78
165.00	5825.00	60.21	PK	H	122.30	62.09	62.99	33.42	6.04	42.24	-2.78
(5825MHz)	5850.00	47.56	PK	H	122.30	74.74	49.96	33.90	6.49	42.79	-2.40
	5855.00	45.68	PK	H	110.90	65.22	47.97	33.90	6.74	42.93	-2.29
	5875.00	46.01	PK	H	105.30	59.29	48.11	33.97	7.02	43.09	-2.10
	5925.00	46.34	PK	H	68.30	21.96	48.11	34.17	7.33	43.27	-1.77
165.00	11650.00	52.49	PK	H	68.30	15.81	47.91	38.83	11.16	45.41	4.58
(5825MHz)	--	--	AV	H	--	--	--	--	--	--	--

Tested	Frequency	Emission	Detector	ANT	Limit	Margin	Raw	Antenna	Cable	Pre	Correction
Channel	(MHz)	Level	Mode	Pol	(dBuV/m)	(dB)	Value	Factor	Factor	amplifier	Factor
		(dBuV/m)					(dBuV)	(dB/m)	(dB)	(dB)	(dB/m)
	5650.00	39.77	PK	V	68.30	28.53	42.00	33.20	5.78	41.21	-2.23
	5700.00	41.65	PK	V	105.30	63.65	43.99	33.40	5.93	41.67	-2.34
	5720.00	43.38	PK	V	110.90	67.52	46.16	33.42	6.04	42.24	-2.78
	5725.00	42.31	PK	V	122.30	79.99	45.09	33.42	6.04	42.24	-2.78
149.00	5745.00	64.39	PK	V	122.30	57.91	67.17	33.42	6.04	42.24	-2.78
(5745MHz)	5850.00	46.63	PK	V	122.30	75.67	49.03	33.90	6.49	42.79	-2.40
	5855.00	45.90	PK	V	110.90	65.00	48.19	33.90	6.74	42.93	-2.29
	5875.00	46.06	PK	V	105.30	59.24	48.16	33.97	7.02	43.09	-2.10
	5925.00	46.24	PK	V	68.30	22.06	48.01	34.17	7.33	43.27	-1.77
149.00	11490.00	52.52	PK	V	68.30	15.78	48.04	39.02	10.91	45.45	4.48
(5745MHz)	--	--	AV	V	--	--		--	--	--	--
	5650.00	38.94	PK	V	68.30	29.36	41.17	33.20	5.78	41.21	-2.23
	5700.00	41.70	PK	V	105.30	63.60	44.04	33.40	5.93	41.67	-2.34
	5720.00	42.41	PK	V	110.90	68.49	45.19	33.42	6.04	42.24	-2.78
157.00	5785.00	62.25	PK	V	122.30	60.05	65.03	33.42	6.04	42.24	-2.78
(5785MHz)	5850.00	45.76	PK	V	122.30	76.54	48.16	33.90	6.49	42.79	-2.40
	5855.00	45.68	PK	V	110.90	65.22	47.97	33.90	6.74	42.93	-2.29
	5875.00	46.14	PK	V	105.30	59.16	48.24	33.97	7.02	43.09	-2.10
	5925.00	46.39	PK	V	68.30	21.91	48.16	34.17	7.33	43.27	-1.77
157.00	11570.00	53.46	PK	V	68.30	14.84	49.01	38.93	10.95	45.43	4.45
(5785MHz)	--	--	AV	V	--	--	--	--	--	--	--
	5650.00	39.94	PK	V	68.30	28.36	42.17	33.20	5.78	41.21	-2.23
	5700.00	41.75	PK	V	105.30	63.55	44.09	33.40	5.93	41.67	-2.34
	5720.00	43.29	PK	V	110.90	67.61	46.07	33.42	6.04	42.24	-2.78
165.00	5825.00	61.34	PK	V	122.30	60.96	64.12	33.42	6.04	42.24	-2.78
(5825MHz)	5850.00	47.62	PK	V	122.30	74.68	50.02	33.90	6.49	42.79	-2.40
	5855.00	45.72	PK	V	110.90	65.18	48.01	33.90	6.74	42.93	-2.29
	5875.00	46.00	PK	V	105.30	59.30	48.10	33.97	7.02	43.09	-2.10
	5925.00	46.44	PK	V	68.30	21.86	48.21	34.17	7.33	43.27	-1.77
165.00	11650.00	52.61	PK	V	68.30	15.69	48.03	38.83	11.16	45.41	4.58
(5825MHz)	--	--	AV	V	--	--	--	--	--	--	--

REMARKS:

1. Emission level (dBuV/m) =Raw Value (dBuV)+Correction Factor (dB/m)
2. Correction Factor (dB/m) = Antenna Factor (dB/m)+Cable Factor (dB)-Pre-amplifier Factor
3. Margin value = Limit value- Emission level.
4. -- Mean the other emission levels were very low against the limit.
5. RBW1MHz VBW3MHz Peak detector is for PK value; RBW 1MHz VBW10Hz Peak detector is for AV value.
6. Worst case data at 6Mbps at IEEE 802.11a; MCS0 at IEEE 802.11n HT20, IEEE 802.11n HT40, IEEE 802.11ac VHT20 ,IEEE 802.11ac VHT40, IEEE 802.11ax VHT20 ,IEEE 802.11ax VHT40.

4.3 Maximum Conducted Average Output Power

Limit

For the band 5.15-5.25 GHz.
(i) For an outdoor access point operating in the band 5.15-5.25 GHz, the maximum conducted output power over the frequency band of operation shall not exceed 1 W provided the maximum antenna gain does not exceed 6 dBi.

(ii) For an indoor access point operating in the band 5.15-5.25 GHz, the maximum conducted output power over the frequency band of operation shall not exceed 1 W provided the maximum antenna gain does not exceed 6 dBi.

(iii) For fixed point-to-point access points operating in the band 5.15-5.25 GHz, the maximum conducted output power over the frequency band of operation shall not exceed 1 W.

(iv) For client devices in the 5.15-5.25 GHz band, the maximum conducted output power over the frequency band of operation shall not exceed 250 mW provided the maximum antenna gain does not exceed 6 dBi.

For the 5.25-5.35 GHz and 5.47-5.725 GHz bands, the maximum conducted output power over the frequency bands of operation shall not exceed the lesser of 250 mW or 11 dBm + 10 log B, where B is the 26 dB emission bandwidth in megahertz.

For the band 5.725-5.85 GHz, the maximum conducted output power over the frequency band of operation shall not exceed 1 W

Test Procedure

Remove the antenna from the EUT and then connect a low loss RF cable from the antenna port to the power sensor.

Test Configuration

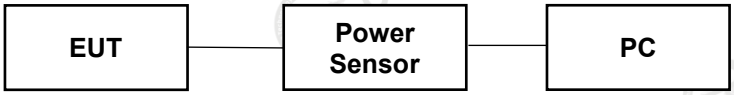

Test Results

Please refer to Appendix RF Test Data for 5GWIFI

Total Output Average power(dBm)= Output Average power(dBm)+ Duty Factor(dB)

4.4 Power Spectral Density

Limit

(1) For the band 5.15 - 5.25 GHz.

(i) For an outdoor access point operating in the band 5.15 - 5.25 GHz, the maximum power spectral density shall not exceed 17 dBm in any 1 MHz band.[note1]

(ii) For an indoor access point operating in the band 5.15 - 5.25 GHz, the maximum power spectral density shall not exceed 17 dBm in any 1 MHz band.[note1]

(iii) For fixed point-to-point access points operating in the band 5.15 - 5.25 GHz, transmitters that employ a directional antenna gain greater than 23 dBi, a 1 dB reduction in maximum power spectral density is required for each 1 dB of antenna gain in excess of 23 dBi.

(iv) For mobile and portable client devices in the 5.15 - 5.25 GHz band, the maximum power spectral density shall not exceed 11 dBm in any 1 MHz band. [note1]

(2) For the 5.25 - 5.35 GHz and 5.47 - 5.725 GHz bands, the peak power spectral density shall not exceed 11 dBm in any 1 MHz band. [note1]

(3) For the band 5.725 - 5.85 GHz, the maximum power spectral density shall not exceed 30 dBm in any 500 kHz band. [note1, note2]

Note1: If transmitting antennas of directional gain greater than 6 dBi are used, the peak power spectral density shall be reduced by the amount in dB that the directional gain of the antenna exceeds 6 dBi.

Note2: Fixed point - to-point U-NII devices operating in this band may employ transmitting antennas with directional gain greater than 6 dBi without any corresponding reduction in transmitter conducted power. Fixed, point-to-point operations exclude the use of point-to-multipoint systems, omnidirectional applications, and multiple collocated transmitters transmitting the same information.

Test Procedure

1. Use this procedure when the maximum peak conducted output power in the fundamental emission is used to demonstrate compliance.
2. Set the RBW = 1MHz for U-NII 1, U-NII 2A, U-NII C band and 300KHz for U-NII 3 band.
3. Set the VBW ≥ 3× RBW.
4. Set the span to encompass the entire EBW.
5. Detector = average.
6. Sweep time = auto couple.
7. Trace mode = Average hold.
8. Allow trace to fully stabilize.
9. Use the peak marker function to determine the maximum power level.

Test Configuration

Test Results

Please refer to Appendix RF Test Data for 5GWIFI

Total Power Spectral Density (dBm/MHz)= Power Spectral Density (dBm/MHz)+ Duty Factor (dB)
Remark: P.S.D(dBm/500KHz)= P.S.D(dBm/300KHz)+10 log (500 kHz/300KHz).

RBW factor = 10 log (500 KHz / 300 KHz) = 2.22 dB

4.5 Minimum Emission Bandwidth (6dB Bandwidth)

Limit

Within the 5.725-5.85 GHz band, the minimum 6 dB bandwidth of U-NII devices shall be at least 500 kHz.

Test Procedure

1. Set resolution bandwidth (RBW) = 100 kHz
2. Set the video bandwidth 3 x RBW.
3. Detector = Peak.
4. Trace mode = Max hold.
5. Measure the maximum width of the emission that is constrained by the frequencies associated with the two outermost amplitude points (upper and lower frequencies) that are attenuated by 6 dB relative to the maximum level measured in the fundamental emission.

Test Configuration

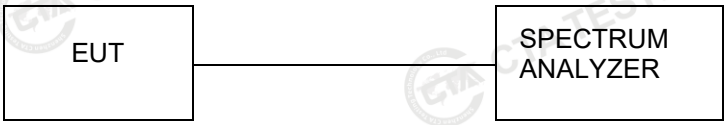

Test Results

Please refer to Appendix RF Test Data for 5GWIFI

4.6 Frequency Stability

LIMIT

Manufacturers of U-NII devices are responsible for ensuring frequency stability such that an emission is maintained within the band of operation under all conditions of normal operation as specified in the users manual.

TEST CONFIGURATION

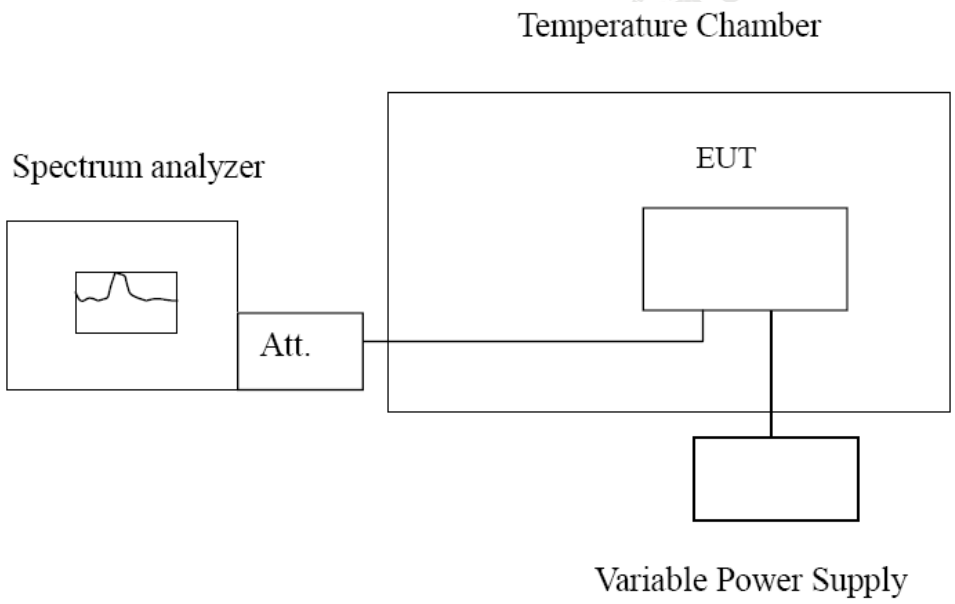

TEST PROCEDURE

Frequency Stability under Temperature Variations:
The equipment under test was connected to an external AC or DC power supply and input rated voltage. RF output was connected to a frequency counter or spectrum analyzer via feed through attenuators. The EUT was placed inside the temperature chamber. Set the spectrum analyzer RBW low enough to obtain the desired frequency resolution and measure EUT 20℃ operating frequency as reference frequency. Turn EUT off and set the chamber temperature to -30℃. After the temperature stabilized for approximately 30 minutes recorded the frequency. Repeat step measure with 10℃ increased per stage until the highest temperature of +50℃ reached.

Frequency Stability under Voltage Variations:
Set chamber temperature to 20℃. Use a variable AC power supply / DC power source to power the EUT and set the voltage to rated voltage. Set the spectrum analyzer RBW low enough to obtain the desired frequency resolution and recorded the frequency.
Reduce the input voltage to specify extreme voltage variation (±15%) and endpoint, record the maximum frequency change.

TEST RESULTS

Reference Frequency: 802.11ac channel=149 frequency=5745MHz					
Voltage (V)	Temperature (℃)	Frequency error		Limit (ppm)	Result
		Hz	ppm		
DC 3.7	-30	135.69	0.023619	Within the band of operation	Pass
	-20	129.57	0.022554		
	-10	167.29	0.029119		
	0	169.95	0.029582		
	10	136.39	0.023741		
	20	144.51	0.025154		
	30	116.75	0.020322		
	40	168.35	0.029304		
	50	160.91	0.028009		
DC 4.2	25	150.81	0.026251		
DC 3.4	25	129.67	0.022571		

4.7 On Time and Duty Cycle

Standard Applicable

None; for reporting purpose only.

TEST CONFIGURATION

Test Procedures

1). Set the Centre frequency of the spectrum analyzer to the transmitting frequency;
2). Set the span=0MHz, RBW=8MHz, VBW=8MHz, Sweep time=1ms;
3). Detector = peak;
4). Trace mode = Single hold.

TEST RESULTS

Please refer to Appendix RF Test Data for 5GWIFI

5 Test Setup Photos of the EUT

Please refer to separated files for Test Setup Photos of the EUT.

6 Photos of the EUT

Please refer to separated files for External Photos & Internal Photos of the EUT.

********** **End of Report** **********