Acknowledgment

SPECIFICATION FOR APPROVEAL

CUSTOMER: AKE

PART NO.: AKE0-Y17X38-15-FR

DESCRIPTION: coil+hard ferrite sheet

SPECIFICATION: 17x38,0.08×24P×2P，from ferrite sheet15mm

DATE: 20240418

TRX APPROVAL		
Production	Audit	Recognition date
Xiaoxian Zeng	Zhihui Qiu	20240418
CUSTOMER APPROVAL		
Project	Approved	Recognition date
Result:	☐ Qualified ☐ Disqualified ☐ Other	

Dongguan city DFL Electronic Technology Co.,LTD

107 Xinfeng West Road, Shijie, Dongguan, Guangdong,

TEL：0769-86016320 FAX：0769-86372427

Dongguan city DFL Electronic Technology Co.,LTD

SPECIFICATION

DESC :	AKE0-Y17X38-15-FR	version Rev:A	Customer:	AKE
			Description:	coil+hard ferrite sheet
			Date:	20240418

1、DIMENSION:(mm)

A	17.0±1.0
B	38.0±1.5
C	44.0±1.0
D	15.0±2.0
E	3.0±1.5
F	0.8±0.15
G	
H	
I	
J	
K	
L	
M	
N	
O	
P	

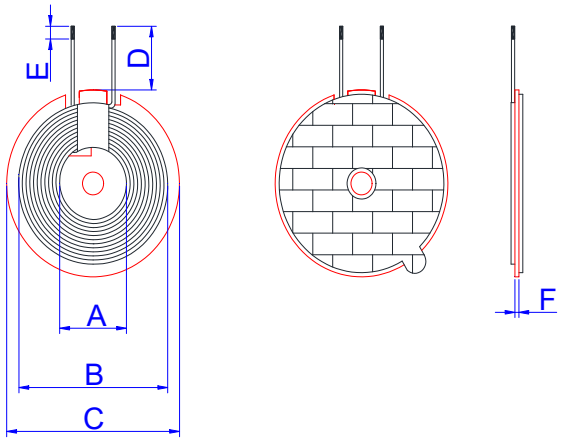

Note:

1. The coil is pasted with G44*0.8 hard ferrite
2. Wrap 8MM high-temperature tape around the coil outlet position.
3. Double-sided tape for ears attached to the back of the ferite sheet
4. The coil cannot be loosened

2、schematic diagram:

3、WindingSpecification:

NO.	TERMINAL		WIRE	Turns	Winding Direction
1			0.08×24P×2P Hot Stranded wire	11TS	Counterclockwise

4、 ELECTRICAL CHARACTERISTICS:

TEMPERATURE:25±10°C,RELATIVE HUMIDITY:65±20%

NO.	ITEM	TERMINAL	SPECIFICATION	TEST FREQUENCY	TEST EQUIPMENTS
1	IND.		6.8UH ± 10% with hard ferrite added	100KHz/1.0V	SHDA 1062
2	IND.				
3	Q value				
4	DCR				

PREPARED BY/DATE	CHECKED BY/DATE	CUSTOMEU/DATE