3.3" User Manual

DT7330

Portable Label Printer
Thermal Transfer

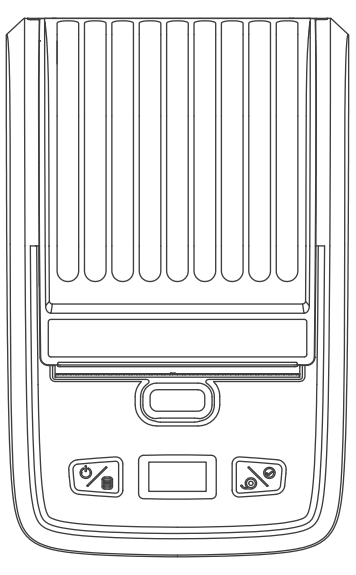

Please read the manual carefully before using, and keep it for future reference

1. Printer Parts

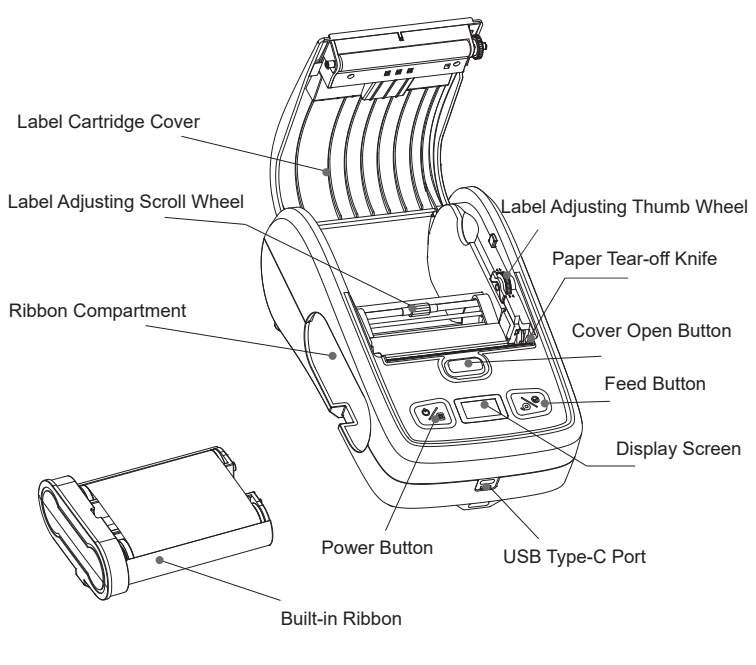

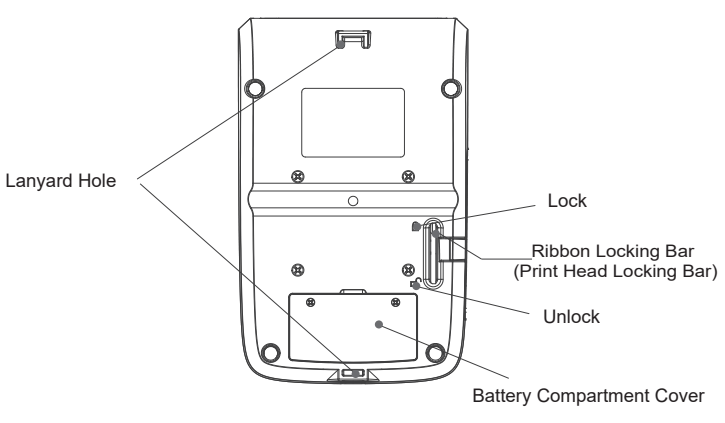

2. Basic Operation

Ribbon Installation

Take out ribbon: pull ribbon locking bar to unlock, take ribbon out.
Install ribbon: pull ribbon locking bar to unlock, insert ribbon to the bottom.

Power On the Printer

Press power button for 1.5s to turn the printer on.

Label Roll Installation

Label size: printable side outward, max roll diameter 75mm. Label width 28 to 90mm (including body paper).
Install label roll: Press “Cover Open Button” to open top cover, spin the “Label Adjusting Thumb Wheel” to fix the label, put in label roll, make printable side face down, slightly adjust plates (keep the distance between plate inner side and label roll outside is 0.5mm). Pull out part of the paper manually, then close the top cover.

Feed Label

Gap label/Black mark label: short press feed button to feed one label, feed several labels by long press;
Continuous paper: press feed button to start, release feed button to stop.

Auto Shutdown

Printer will shut down automatically if not used for a long period. Time of automatic shutdown can be set by setting button, default is 15 minutes.

Set Up Printer

Short press power button, printer enters setting status when the icon ⚙ appears on the top left corner of display screen, then press feed button to make corresponding options.

3. Connect the Printer

1. Install Editing Application

Search App name "**WePrint**" from Google Play or App Store.

WePrint App
Label Prints Easy
DOWNLOAD APP FROM
Available on the App Store
GET IT ON Google Play

2. Print from Computer

For macOS, please download "**WePrint**" from Mac App Store, connect with printer via Bluetooth.
For Windows / Linux, please install printer driver first, edit label via "**WeiDa Online Web**" version on browser, connect with printer via USB cable wire. Please contact with your supplier for all details.

3.Free Official Templates

Various templates available for different industries, from “Template”-“Cloud”, no need to login.

4.Login (Cloud Directory)

Function of Cloud Directory is upload custom label templates to Cloud account, share among friends or colleagues.
Please contact with supplier for login username and password.

4. Specifications

Display Type	TFT display	Label Size	28 ~ 90.5 mm x dia. 75 (mm)
Print Method	Thermal transfer line	Print Width	80 / 81 mm
Print Color	Black and white, others (same as ribbon color)	Label Thinkness	0.05 ~ 0.2 mm
Print Resolution	300dpi	Dimension	210 x 135 x 88mm (L x W x H)
Print Speed	20 ~ 70 mm/s	Weight	960 g (including built-in ribbon)
Battery Runtime	120 ~ 150 m	Temperature	0℃ ~ 45℃
Charge Time	3 ~ 4 h	Interface	USB, Bluetooth
Ribbon Length	45 m	Command	LPAPI®

5. Safety Precautions

Please follow these guidelines during operation

⚠NOTE	Do not disassemble the printer by yourself. Please read this manual carefully before using.
⚠WARNING	Turn off the power immediately if a malfunction occurs. When the printer or charger emits smoke or smelliness, please remove the charger and battery immediately, be aware of getting burned.
⚠WARNING	Do not use the printer near petrol station, fuel depot or other inflammables.
⚠NOTE	Print head is still heated, do not touch it after printing process.
⚠NOTE	Please choose the original label papers, or poor printing effect and printer platen roller damage can result.
⚠NOTE	Please recharge the printer regularly if it is not used for a long to protect battery life.
⚠NOTE	Before replacing the battery, please make sure the printer turns off, or power supply is disconnected if you use a charger.

6. Maintenance

1. If printer prints blurry, feed label with loud noise or foreign matters stuck on print head.
2. Please make sure rubber roller is cool, then use alcohol wipe to clean rubber roller surface.

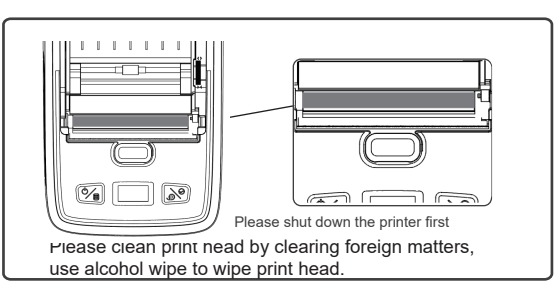

FCC Statement

This device complies with Part 15 of the FCC Rules. Operation is subject to the following two conditions:
This device may not cause harmful interference, and This device must accept any interference received, including interference that may cause undesired operation.
Warning:
Changes or modifications not expressly approved by the party responsible for compliance could void the user's authority to operate the equipment.

NOTE: This equipment has been tested and found to comply with the limits for a Class B digital device, pursuant to Part 15 of the FCC Rules. These limits are designed to provide reasonable protection against harmful interference in a residential installation.
This equipment generates uses and can radiate radio frequency energy and, if not installed and used in accordance with the instructions, may cause harmful interference to radio communications. However, there is no guarantee that interference will not occur in a particular installation. If this equipment does cause harmful interference to radio or television reception, which can be determined by turning the equipment off and on, the user is encouraged to try to correct the interference by one or more of the following measures:

Reorient or relocate the receiving antenna.
Increase the separation between the equipment and receiver.
Connect the equipment into an outlet on a circuit different from that to which the receiver is connected.
Consult the dealer or an experienced radio/TV technician for help.

RF warning statement:
The device has been evaluated to meet general RF exposure requirement.
The device can be used in portable exposure condition without restriction.

NB-RED Statement

This product complies with the radio interference requirements of the European Community.

Product name: Portable Label Printer
Product model: DT7330
Applicant: DeTong Electronic Technology (Jiangsu) Co., Ltd.
Address: Building 18, No.27 Jinxing Road Jinfeng Town, Zhangjiagang, Jiangsu, China

Operation Mode	:	BT BDR	BT EDR
Operation Frequency	:	2402~2480MHz	
Max. output Power	:	-5.81dBm	

Operation Mode	:	BLE
Operation Frequency	:	2402~2480MHz
Max. output Power	:	-5.02dBm

SIMPLIFIED EU DECLARATION OF CONFORMITY
The simplified EU declaration of conformity referred to in Article 10(9) shall be provided as follows:
Hereby, DeTong Electronic Technology (Jiangsu) Co., Ltd. declares that radio equipment type DT7330 is in compliance

with Directive 2014/53/EU.This product can be used across EU member states.

BATTERY Warning: CAUTION:RISK OF EXPLOSION IF BATTERY IS REPLACED BY AN INCORRECT TYPE DISPOSE OF USED BATTERIES ACCORDING TO THE INSTRUCTIONS

SUCCESS COURIER SLCALLE RIO TORMES NUM.1, PLANTA 1, DERECHA,OFICINA 3, Fuenlabrada, Madrid, 28947 Spain
successservice2@hotmail.com