Specification

Document Number	A11	Name of a part	Wireless Transceiver Coil Module		
Product size	ϕ 43.5*ϕ 5*H1.4		Adhesion Method	Hot air self-adhesion	

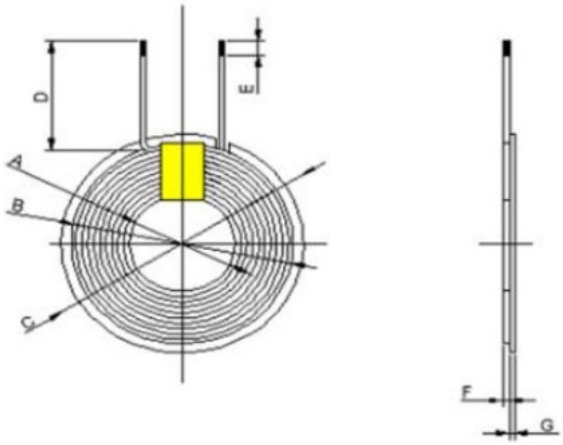

A	20.5±0.5
B	39±1
C	43.5±0.5
D	15±2
E	3±1
F	1.17±0.1
G	0.6±0.1
H	1.4±0.1
Unit： MM	

Wire stock	0.08 × 48 shares	Winding Method	Single-wire stranded winding type	Remarks	The coil rotates clockwise
Number of turns	10 Ts				
Disk Size	Φ 43.5*ϕ 5*0.6	L	6.5uH±10%		
Coil Size	φ 39*Formula 20.5	Test Frequency	100KHZ	Test Method	Series Test

manufacturer：Dongguan Agilian Technologies Co., Ltd
address：Room 202, No. 3, Dongyi Street, Xingfa South Road, Wusha community, Chang 'an Town, Dongguan City, Guangdong Province, China