AM7 Smart Strength Trainer

USER MANUAL

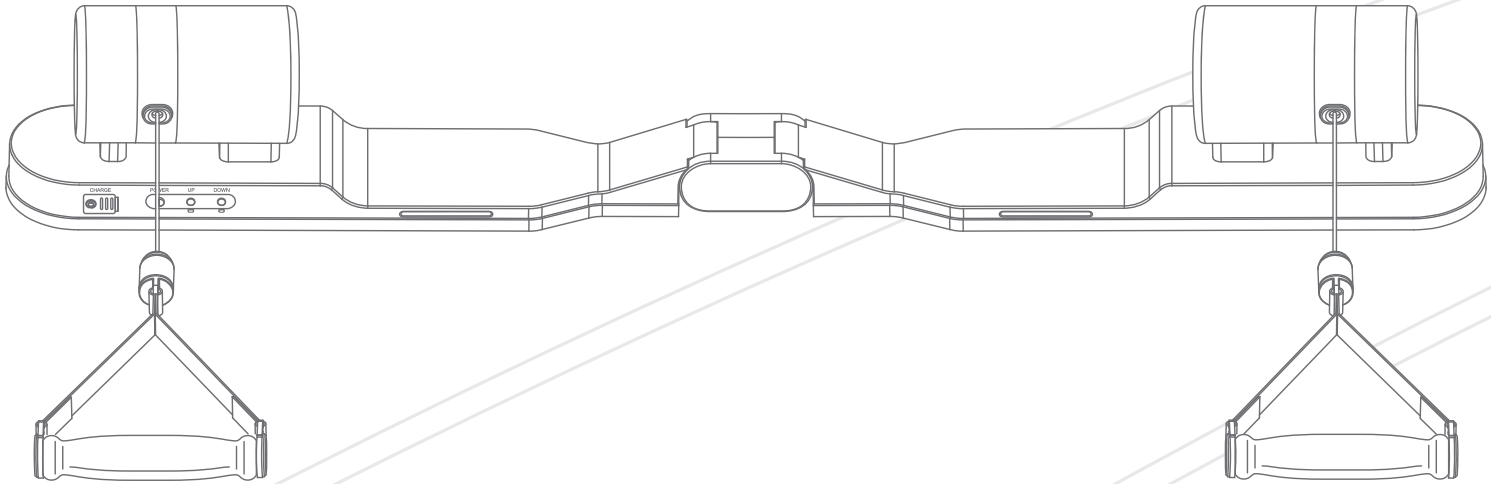

SAFETY TIPS

Before starting your exercise, please carefully read and follow the important warnings and guidelines to use the AM7 product correctly, carry out the scientific training according to your own physical qualities and the general knowledge of fitness

- Please wear suitable clothes for sports, including sports shoes when using AM7 equipment.
- When AM7 works for a long time, the torque will automatically decrease for overheating protection if the motors temperature exceeds 65 ℃
- When you find the obvious cable jump off during the exercise, turn off AM7 product power, pull out all the ropes at both ends, and then turn on the power again, waiting for the rope to be automatically retracted; Or contact after-sales customer service to obtain operation guidance videos.

⚠ WARNINGS

- Only the power charger packed with AM7 product can be used for charging, and other chargers cannot be used for charging the AM7 product.Do not use the AM7 product while charging.
- And Do not charge the product in a humid environment.
- It can only be charged indoors and should be used away from the sink, bathtub and hot surfaces.
- The best charging environment is the environmental area with a temperature range of 0-40 ℃/(32 - 104 ℉).
- And please place AM7 product in a safe place which is moisture-proof Do not place it on a high place or expose it to the sun.
- Keep the sharp objects away from the pull rope to prevent damage and broken to the pull rope.
- Please pay attention to the product folding operation to keep the hand from clipping.
- If the power cord is damaged, it must be replaced with a special cord or a special component purchased from its manufacturer or maintenance department.
- Do not disassemble AM7 without permission. If the tamper proof label is torn, you will not have the

Do not soak the product in water

Keep the sharp objects away from the pull rope

Do not wipe the product with a damp cloth

keep the hand from clipping

Disassembly is not Allowed

PRODUCT USE GUIDE | Function Key Introduction

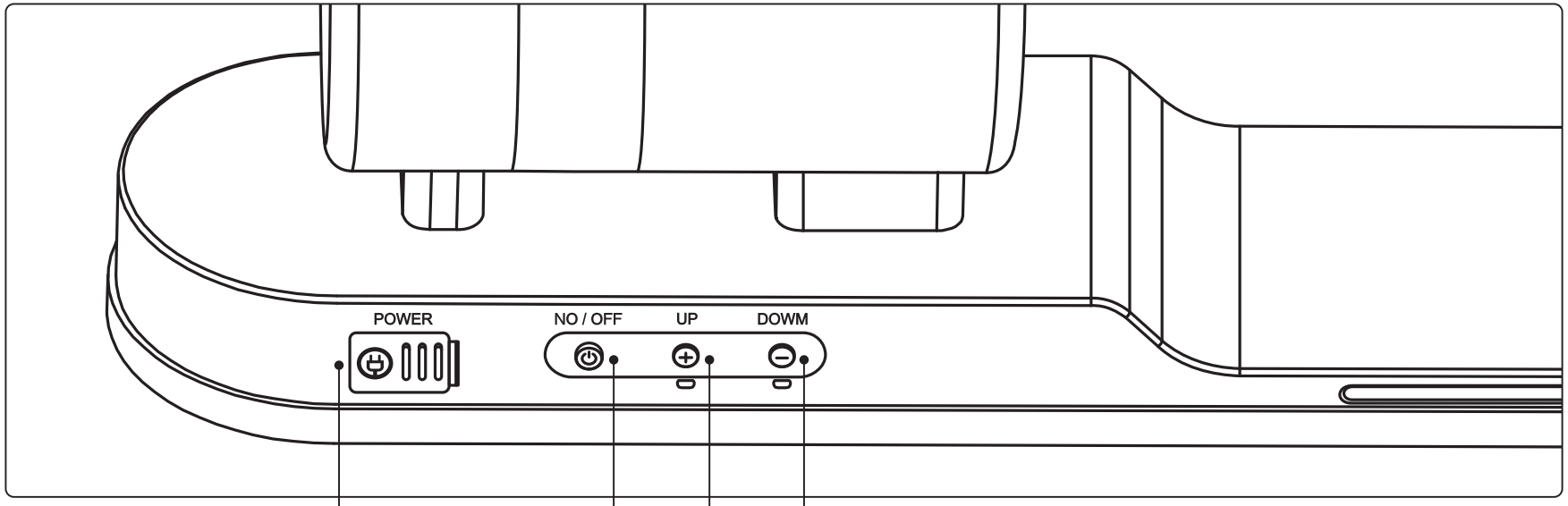

POWER

Power charging port

ON/OFF

Press the power switch for seconds until the blue light on, and do the same until the blue light off for power off . After turn on, please wait for the rope returned and wait for 3 seconds to use.

DOWN-Weight Decreasing button

The red light flash twice for every press with 2Kg weight decrease.

UP-Weight Increasing button

The red light flash twice for every press with 2Kg weight increase.

Open the box and take out AM7 fitness cabin, take out the dumbbell handle, Combination barbell bar, Optional Squat belt optional or foot ring buckle accessories, Optional align the T-buckle with the pull rope mounting hole, press and rotate it for 90 degrees, hear the sound of "click", and pull the T-buckle belt to confirm that the installation is firm. After installing the accessories of AM7, you can directly modify the weight and start your happy sports journey. And before staring using the AM7 product, please pay attention to the installation and operation

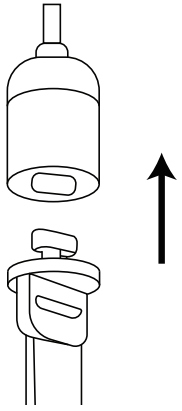

Align the T-buckle with the interface

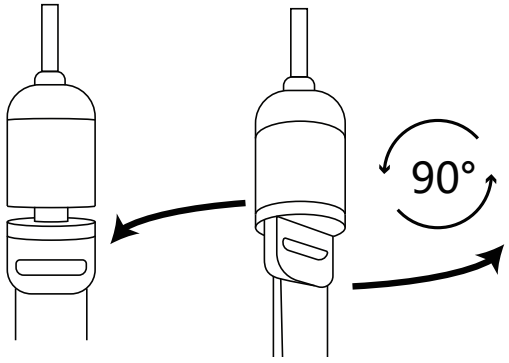

Insert it vertically to the bottom and rotate the T-buckle 90 degrees, find the right locking position until hearing the "click" sound.

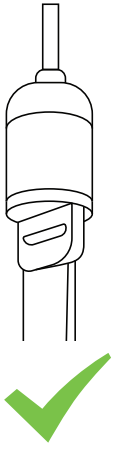

Pull the T-buckle to check if it was being completely locked.

Sketch map of Fixing AM7 with feet at both side

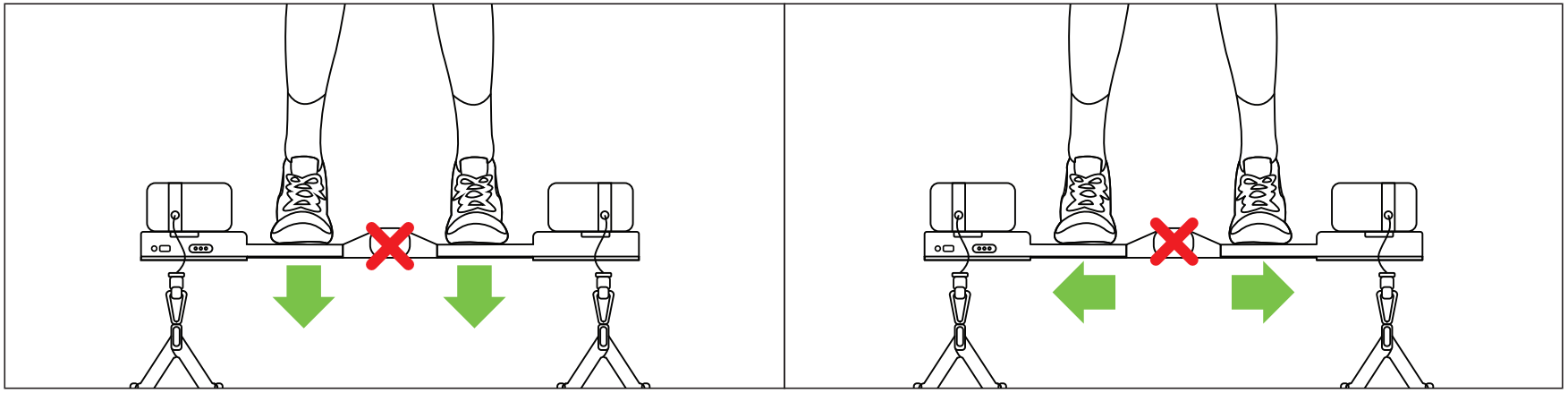

Stand with feet parallel and toes forward. Do not step on the folding part in the middle to keep AM7 from

Sketch map of fixing the AM7 at one side

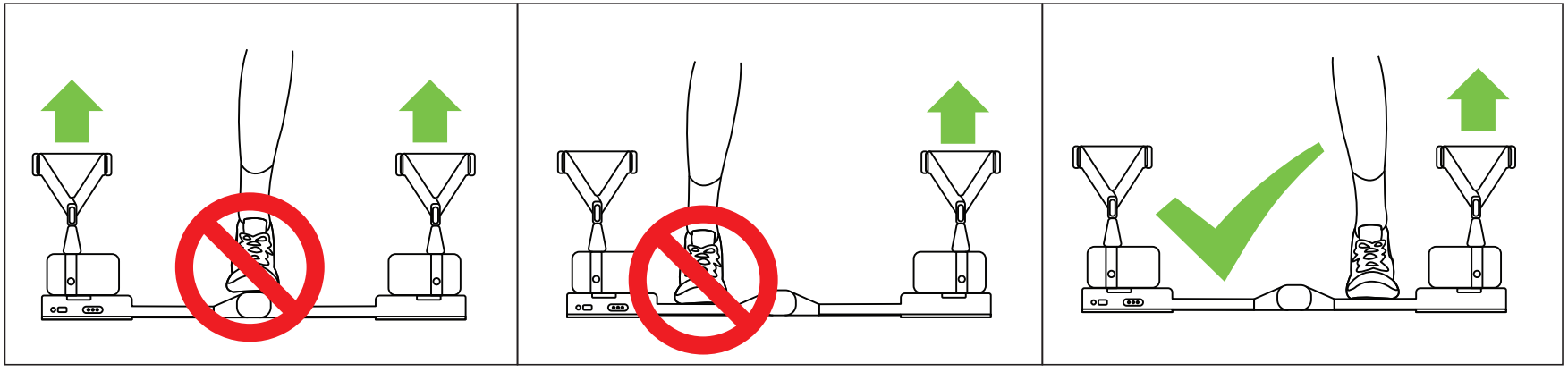

When standing on one side, do not step on the folding part in the middle and pull the traction rope at the same

PRODUCT USE GUIDE | Sketch map of fixing AM7 with AM7 folding bench (Optional)

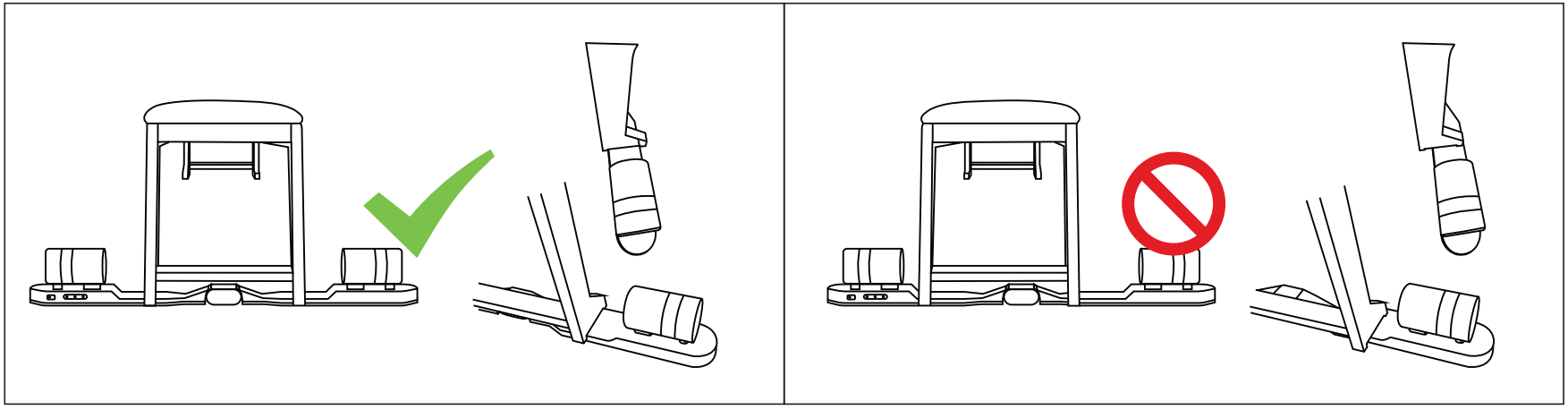

Align the both slots of AM7 folding bench with the AM7 body at the horizontal direction, Note that the slots on both sides of the AM7 folding bench must be completely stuck on AM7 body and it was at the center of the AM7 to the horizontal direction ;

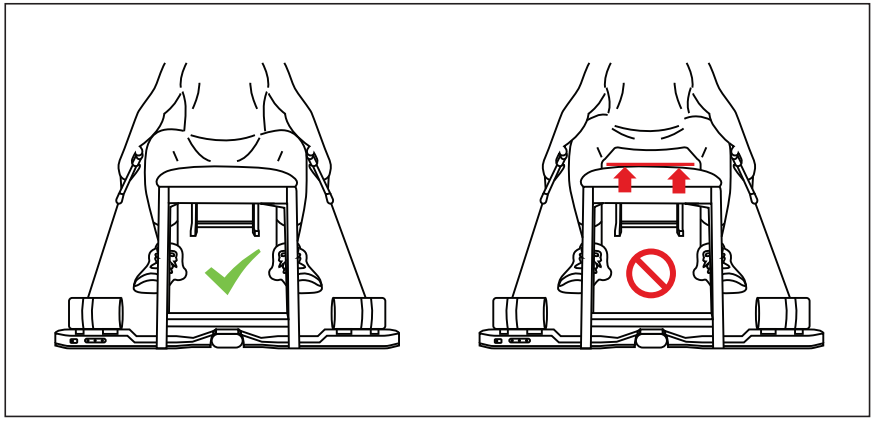

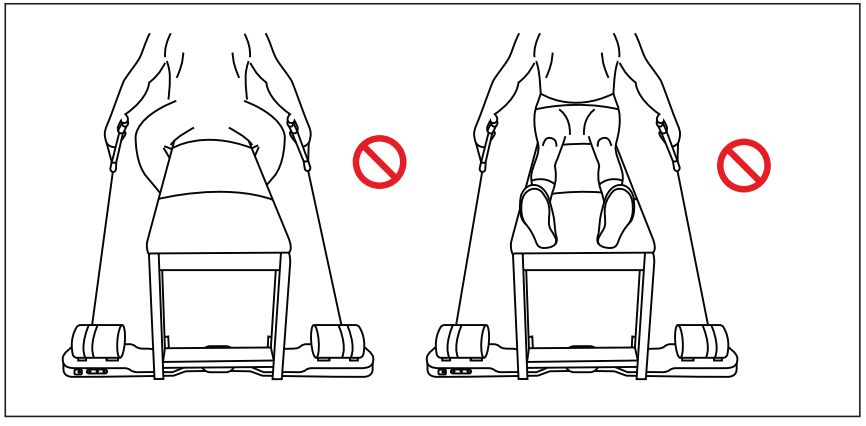

Do not lift your hips or get up when pulling AM7, You need to wait until AM7 gets back to the rope end before standing up.

It is required to sit on the same side of where the AM7 being held under AM7 folding bench and it is not allowed to pull the AM7 at the other side AM7 folding bench, as well as putting the whole body on the stool.

After the installation, the training operation shall be carried out strictly according to the AM7 video training program.

PRODUCT USE GUIDE | Sketch map of fixing AM7 with AM7 wall hanging fixture

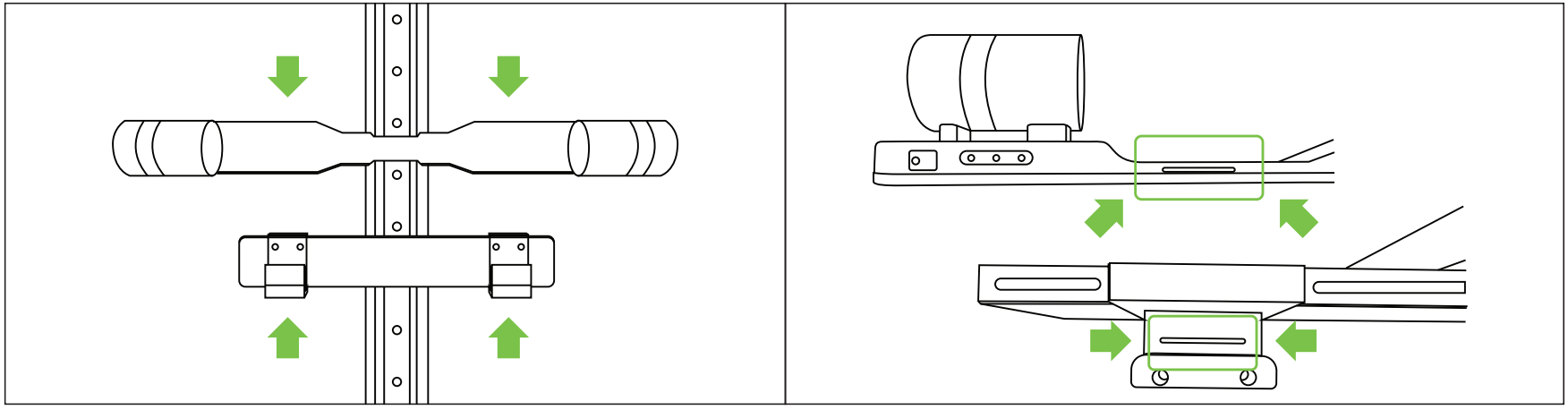

Put the AM7 on the AM7 wall mounting fixture, pay attention to the slot hole, make sure that the slots on both sides were embedded at the same horizontal line.

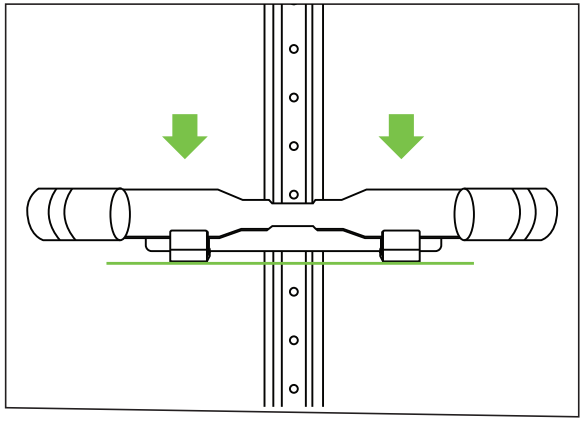

Press AM7 firmly until it completely fits into the AM7 wall hanging

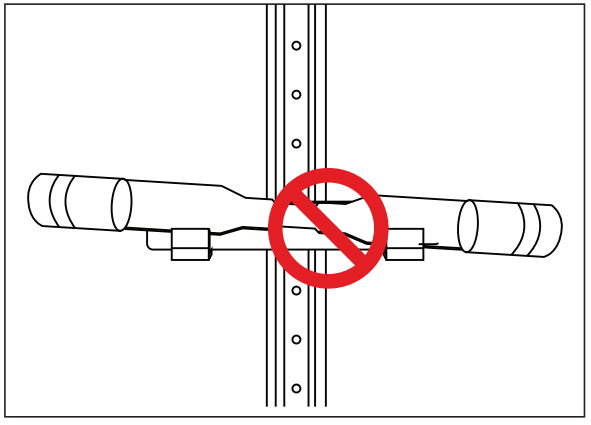

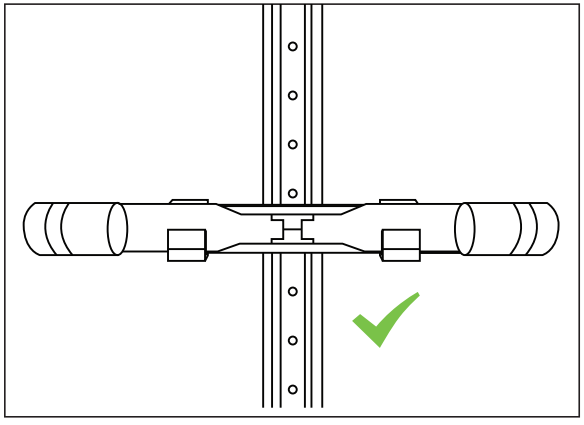

Check whether it was secure and both sides are embedded at the same horizontal line before starting using AM7.

PRODUCT USE GUIDE | AM7 APP Installation

Choose iOS or Android according to different mobile phone systems, scan the QR code below to install AM7 APP, which is convenient to provide you with richer training program and more detailed sports experience.

IOS

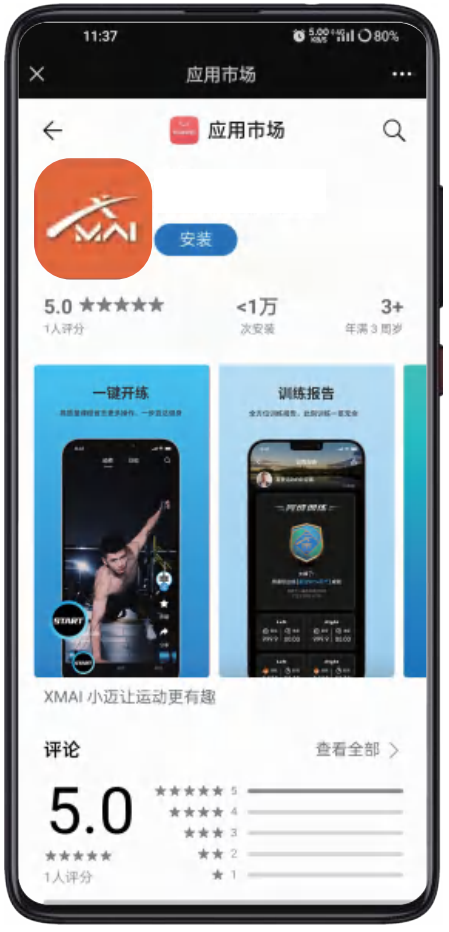

Andriod

PRODUCT USE GUIDE | AM7 APP Registration and connection

1) Download APP and Register account as APP Guide.
2) Turn on your mobile phone Bluetooth and AM7 devices, keep your mobile phone as close as to AM7 devices, turn on the left top ICON in APP(fig 1)
3) Allow access of AM7 devices. If AM7 devices didn’ t shown up, pls search in bluetooth list then match.(fig 2)

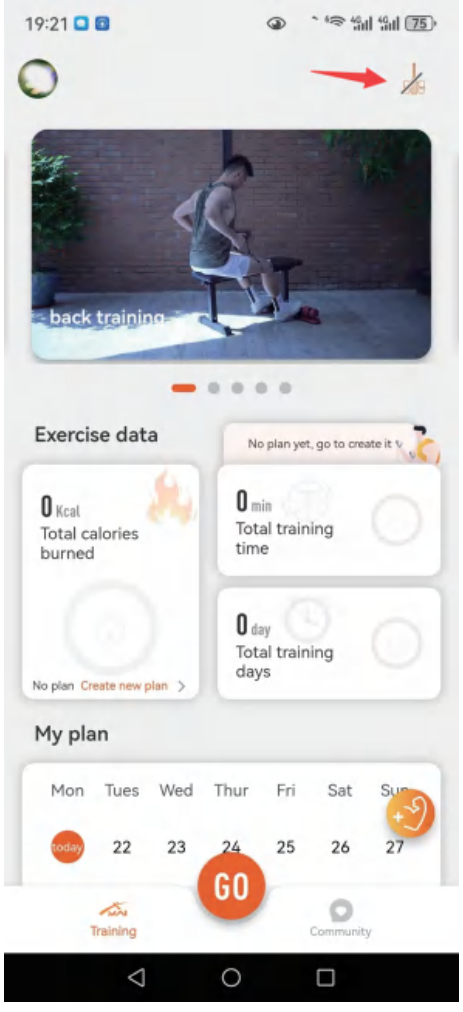

fig1

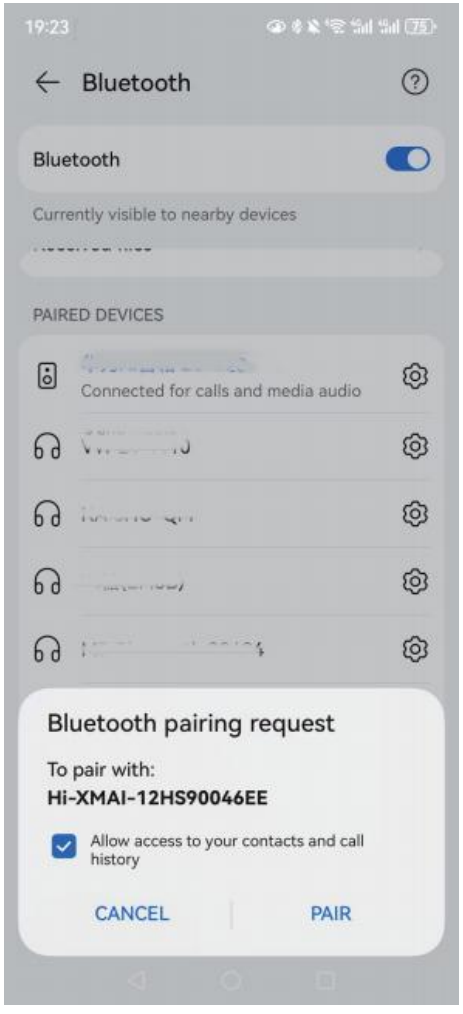

fig2

HOME

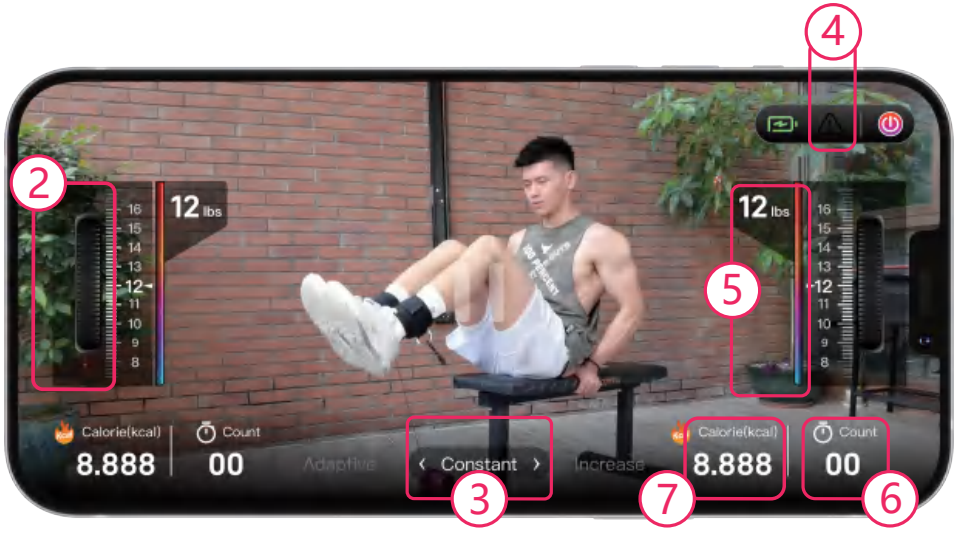

Rich Training Patterns

① Starting exercise

② Adjust the weight by moving the bar up or down

③ Weight mode switching, Constant, increasing, decreasing , spring and adaptive weight modes, the 5 weight modes here

④ Abnormal Alert

⑤ Actual Weight

⑥ Calorie

⑦ Times

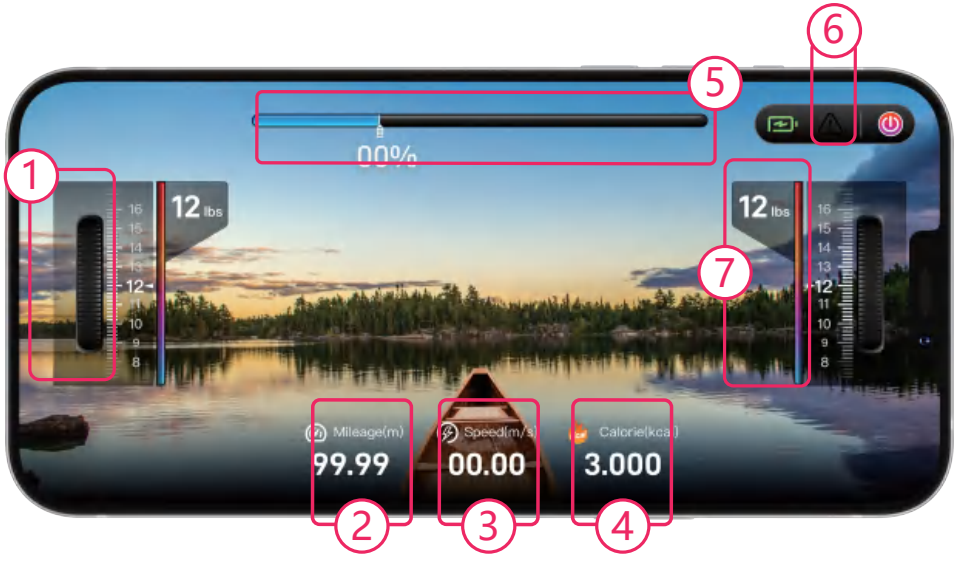

Boating game, make the sport Fun
Boating mode

① Adjust the weight by moving the bar up or down

② Mileage display

③ Speed display

④ Calorie Display

④ Calorie Display

⑤ Completion percentage

⑥ Abnormal Alert

⑦ Actual weight

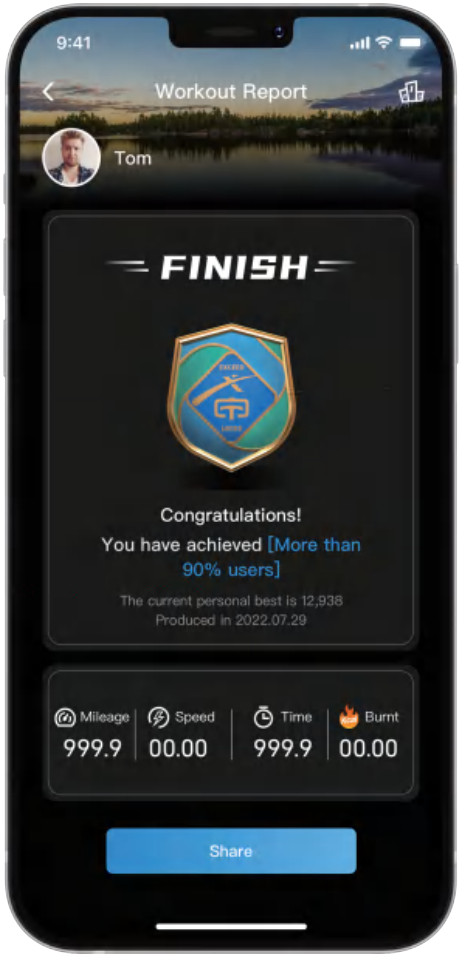

End of movement interface content

ACCESSORIES

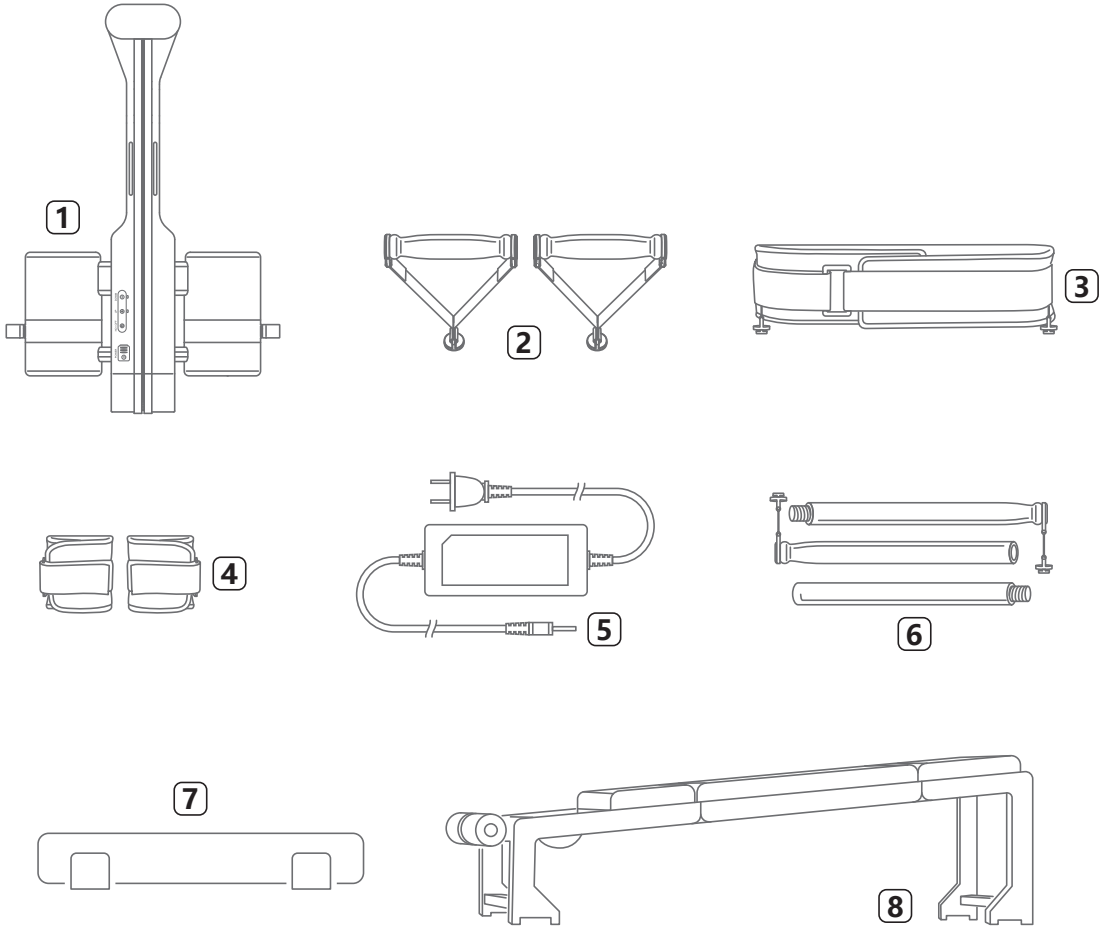

1. AM7 Smart Trainer
2. Dumbbell Handle
3. Squat Belt (optional)
4. Foot Ring Buckle (optional)
5. Charger
6. Combination Barbell Bar (optional)
7. Wall Mounted Panel
8. Folding Bench (optional)

INTRODUCTION TO PRODUCT APPLICATION SCENARIOS

1. Dumbbell and barbell training

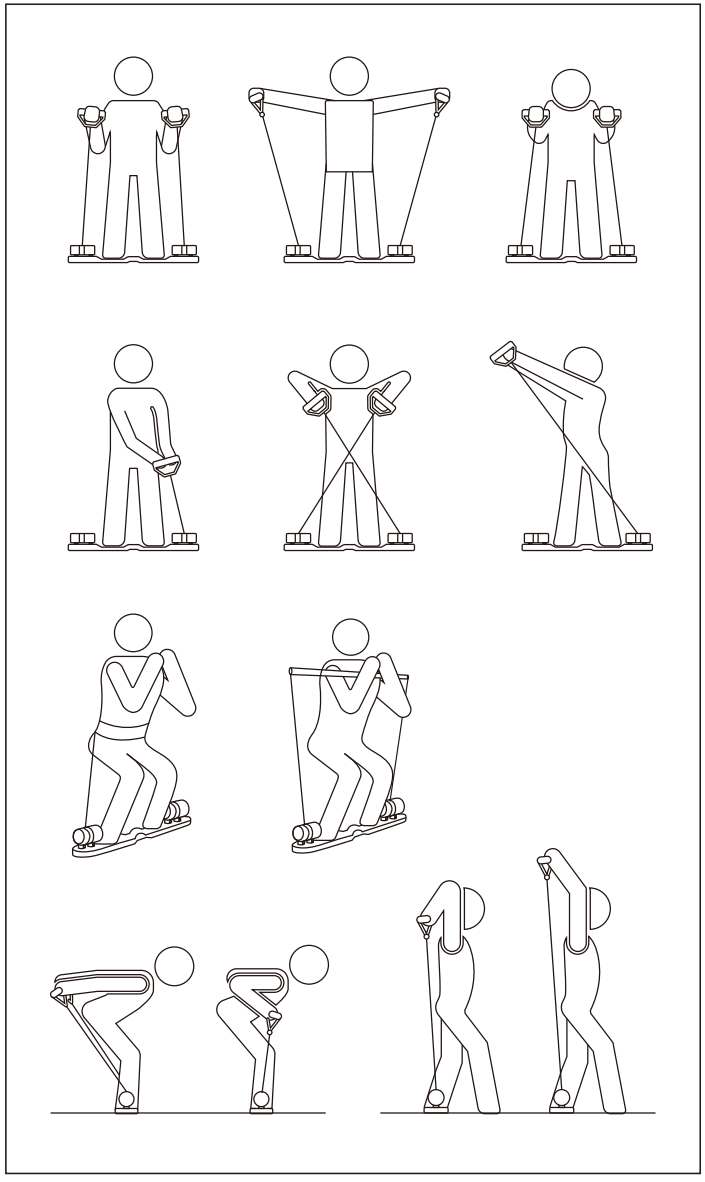

2. Wall hanging training pattern

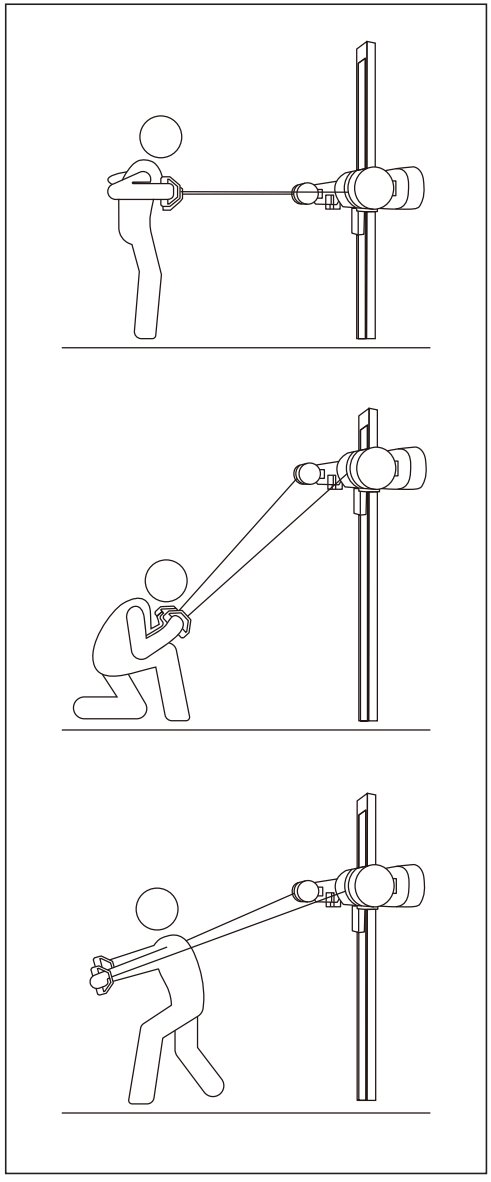

3. Horizontal Push Training

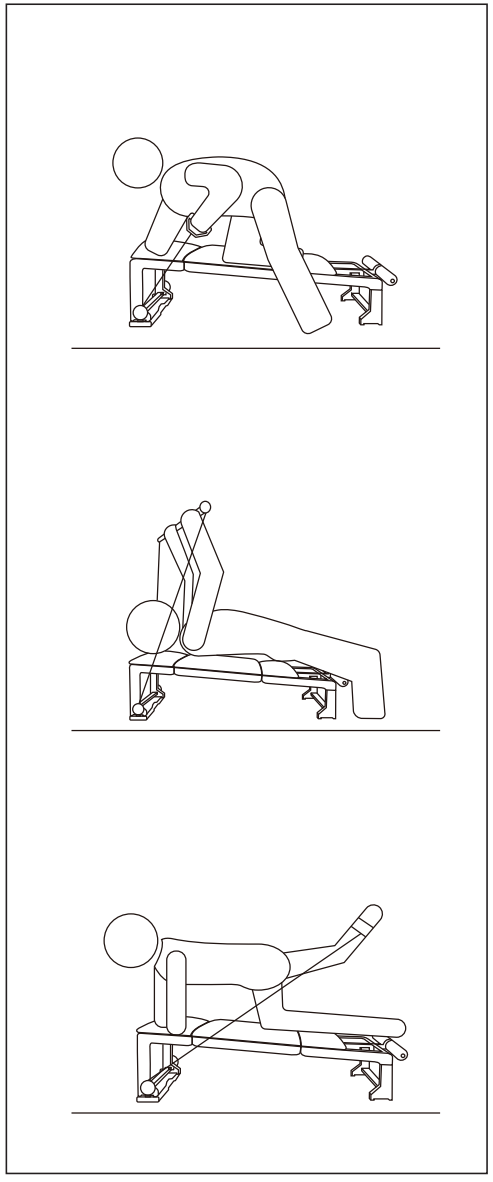

PRODUCT DETAILS

Unfolded Dimension:

L863mm x W83mm x H123mm

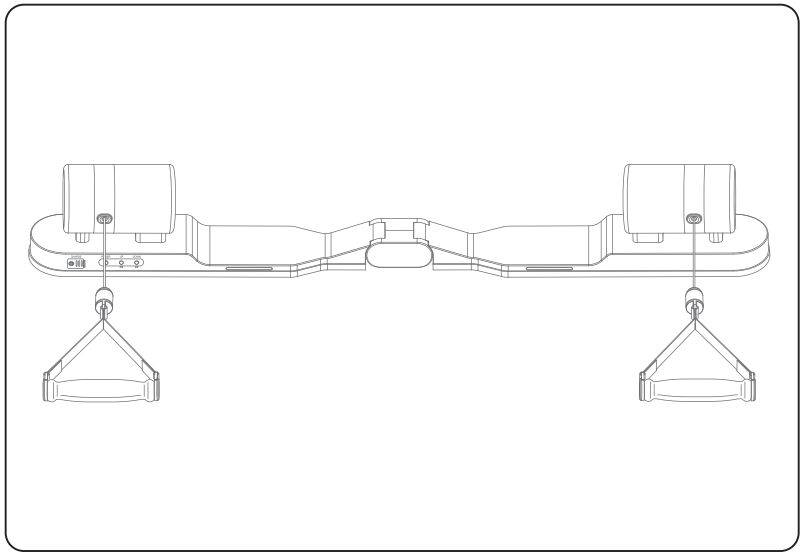

Folded Dimension:

L429mm x W83mm x H246mm

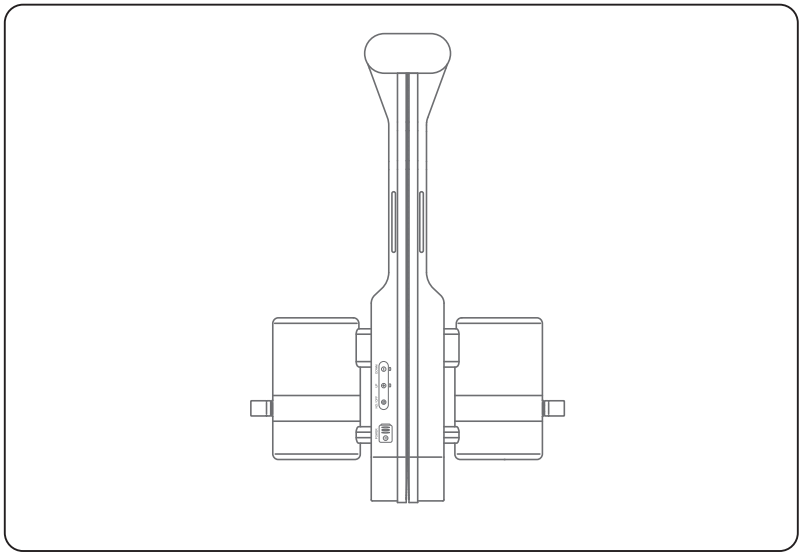

Lope Length: 2.2m

Product Net Weight: 5.5Kg

Rating Power: 260w*2pcs

Rated Output Force Of Motor: 0-30kgs*2side

Battery Capacity: 2500mAh*7Cells

Charging Voltage: DC29.4V

FCC Warnning:

This equipment has been tested and found to comply with the limits for a Class B digital device, pursuant to part 15 of the FCC Rules. These limits are designed to provide reasonable protection againstharmful interference in a residential installation. This equipment generates, uses and can radiateradio frequency energy and, if not installed and used in accordance with the instructions, maycause harmful interference to radio communications. However, there is no guarantee thatinterference will not occur in a particular installation. If this equipment does cause harmfulinterference to radio or television reception, which can be determined by turning the equipmentoff and on, the user is encouraged to try to correct the interference by one or more of thefollowing measures:

- Reorient or relocate the receiving antenna.
- Increase the separation between the equipment and receiver.
- Connect the equipment into an outlet on a circuit different from that to which the receiver is connected.
- Consult the dealer or an experienced radio/TV technician for help.

Caution: Any changes or modifications to this device not explicitly approved by manufacturer could void your authority to operate this equipment.

This device complies with part 15 of the FCC Rules. Operation is subject to the following two conditions:

(1)This device may not cause harmful interference, and (2) this device must accept any interference received, including interference that may cause undesired operation.

This equipment complies with FCC radiation exposure limits set forth for an uncontrolled environment. This equipment should be installed and operated with minimum distance 0cm between the radiator and your body.