天 线 规 格 书
Antenna specification for approval

客户名称 Customer name	
机型 Model	
天线频段 Antenna band	2.4GHZ
天线类型 Antenna type	7G-108-V1.1-FPCB-ANT
天线材质 Antenna material	FPCB
FPC 颜色 FPC color	black
料号 Material number	7G-108-V1.1-FPC-ANT

厂商 承 认 签 章 Baren accepted the signature		客 户 承 认 签 章 Client acknowledges signature	
结构 structure		采购 Purchase	
品质 QC		结构 structure	
射频 radio frequency		工程 engineering	
审核 To examine		品质 QC	
日期 date	盖章区 Seal area	日期 date	盖章区 Seal area

7 / F, Building F, Zhichuang Park, Tong 'an, Gushu, Shenzhen

电话：13530576606

目录

一:Device support & can test antenna types.....1

二:summariz.....2

三:Match circuit diagram & machine picture & antenna picture.....3

四:Antenna Standing Wave Ratio & Antenna Efficiency (VSWR)..... 4

五:3D pattern.....5

六:Structural drawing.....6

一:Device support & can test antenna types

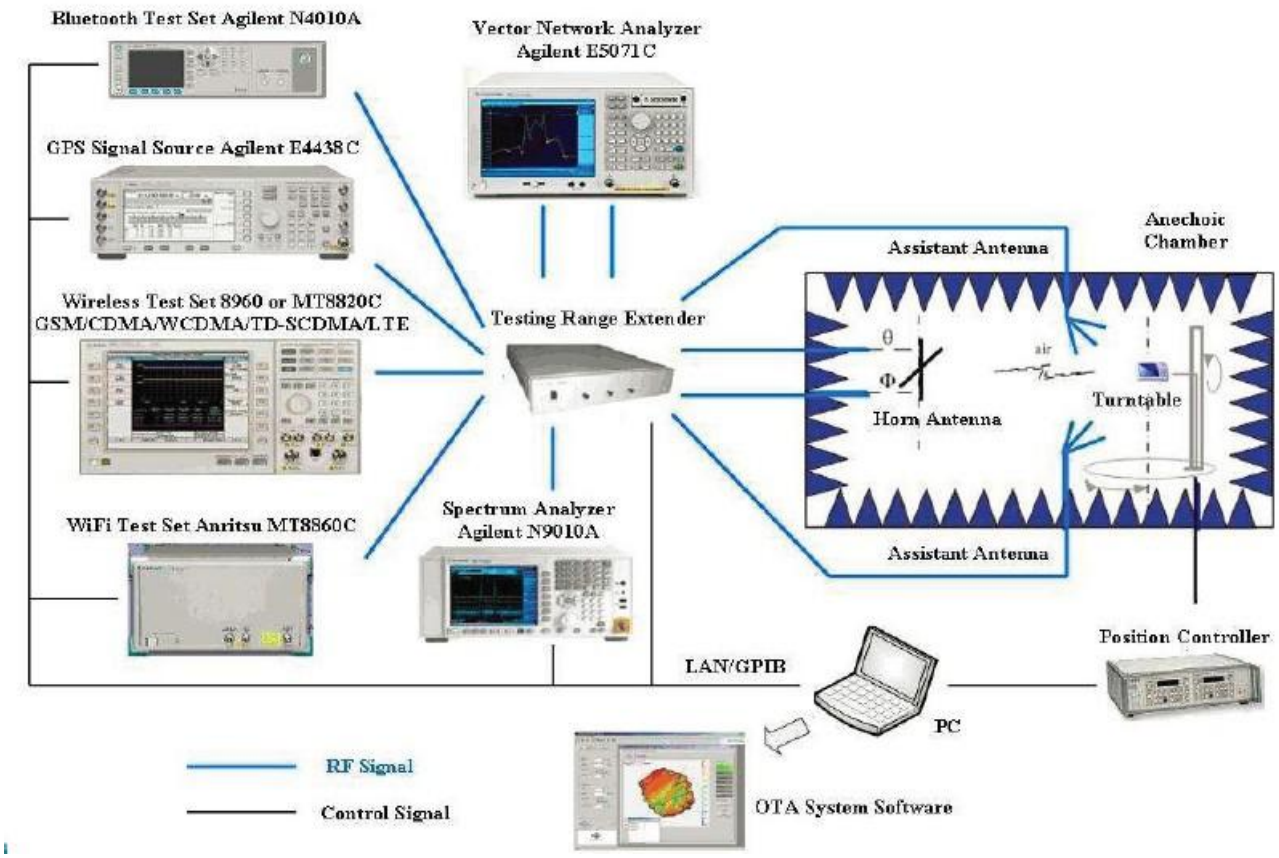

二:summarize

(1)Antenna performance

1. This approval sheet supports for MID project. FPC antennas include in this project. This report is for the performance of BT antenna.
2. Antenna shape size: Meet the requirement of MID
3. Antenna band: 2400MHz~2500MHz
4. Antenna material: Antenna material meet the requirement of MID
5. Adhesive performance: Adhesive performance meet the requirement of MID
6. Antenna performance meet the spec below:

Description	2.4GHZ~2.5GHz	Units
VSWR	≤2.0	
Average Antenna Gain	2.69	dBi
Antenna Efficiency	≥40	%
Feed Impedance	50 ohms	
Operating Temperature	-40 to +85 deg C	
Polarization / Azimuth	Linear / Omni-directional	

(2)Mechanical Information

Mechanical Dimension	
Cable Length	NA
Description	antenna
Material	FPCB
Coaxial Cable	NA
Environmental	
Operation Temperature	-40 to +85 deg C
Storage Temperature	-40 to +85 deg C

三:Match circuit diagram & machine

picture & antenna picture

(2) Machine picture & antenna picture

1: gold plating; 3: Surface black matte ink; 4: Meet the latest environmental requirements: RoHS&REACH; 5: The whole board shipment;

四:Antenna Standing Wave Ratio & Antenna Efficiency (VSWR)

Frequency (MHz)	VSWR
2400	1.29
2440	1.02
2480	1.38

Freq (MHz)	Effi (%)	Effi (dB)	Gain (dBi)	Gain (dBd)
2400	47.6	-3.22	2.36	0.21
2410	41.94	-3.77	1.79	-0.36
2420	44.56	-3.51	2.06	-0.09
2430	50.2	-2.99	2.66	0.51
2440	40.53	-3.92	1.71	-0.44
2450	50.36	-2.98	2.69	0.54
2460	42.12	-3.75	2.01	-0.14
2470	43.69	-3.6	2.06	-0.09
2480	47.52	-3.23	2.3	0.15
2490	36.44	-4.38	1.03	-1.12
2500	41.78	-3.79	1.48	-0.67

五:3D pattern

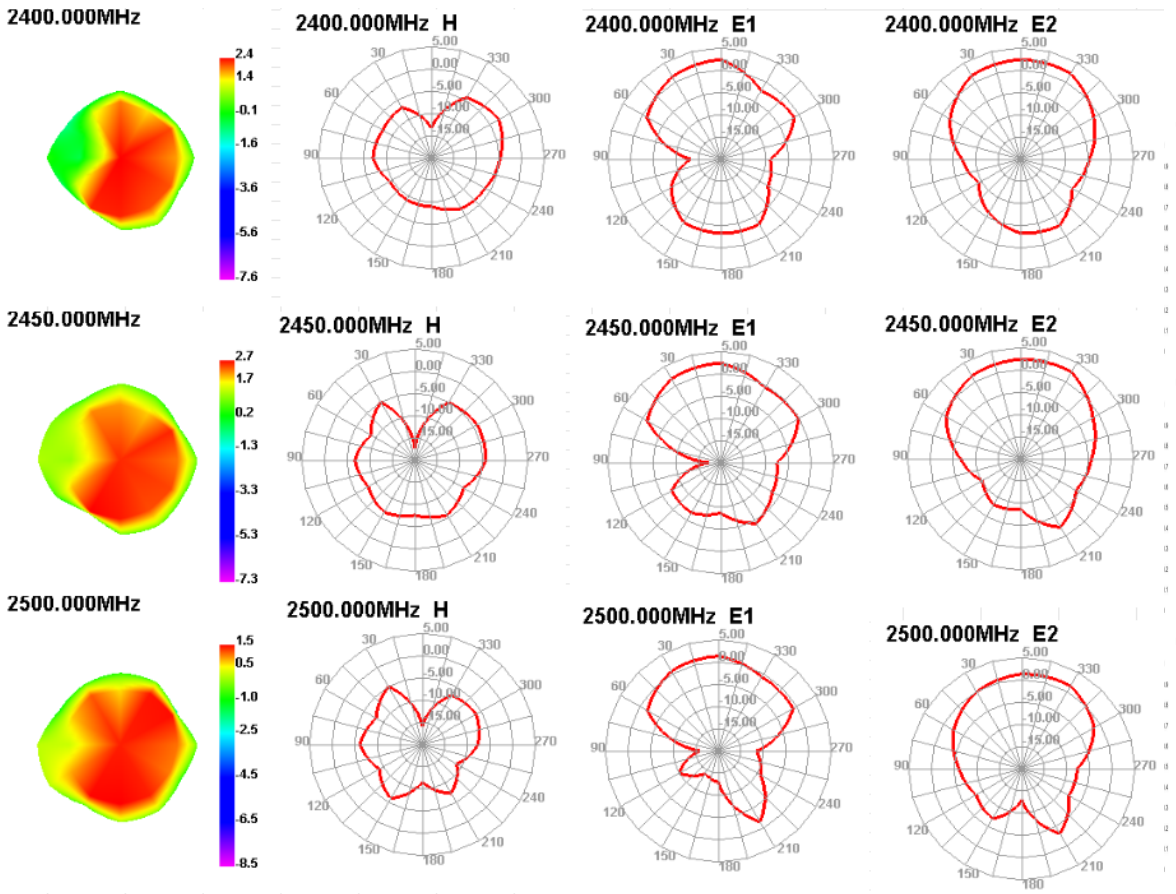
2400.000MHz
2400.000MHz H
2400.000MHz E1
2400.000MHz E2
2450.000MHz
2450.000MHz H
2450.000MHz E1
2450.000MHz E2
2500.000MHz
2500.000MHz H
2500.000MHz E1
2500.000MHz E2

六:Structural drawing
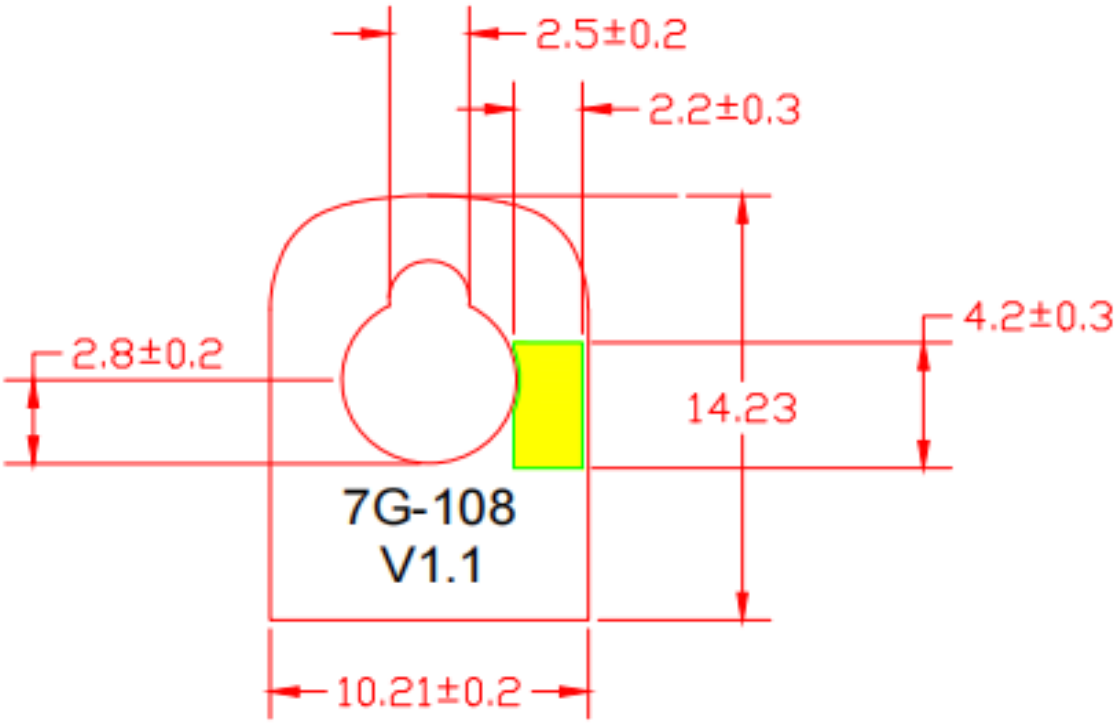
Unit(mm)