TEST REPORT

Report No.	CISRR25011311005
Project No.	CISR250113110
FCC ID	2BNUT-AW869C
Applicant	SHENZHEN RSCHIP TECHNOLOGY CO.,LTD
Address	9A201,Taihua Wutong Industrial Park, Sanwei Community, Hangcheng Stret, Baoan District, Shenzhen, China
Manufacturer	HUNAN CDTECH TECHNOLOGY CO.,LTD
Address	3/F, Buiding 1, Xiangjiang Kunpeng Industrial Park, No.67 Ziyuan Road, Xuejie Street, Yuele District, Changsha City, Hunan Province
Product Name	5.8GHz/5.1GHz/2.4GHz WLAN/Bluetooth module
Trade Mark	N/A
Model/Type reference	AW869C
Listed Model(s)	N/A
Standard	Part 15 Subpart E Section 15.407
Test date	February 11, 2025 to February 22, 2025
Issue date	February 25, 2025
Test result	**Complied**

Rory Huang

Prepared by: Rory Huang

Genry Long

Approved by: Genry Long

The test results relate only to the tested samples.

The test report should not be reproduced except in full without the written approval of Shenzhen Bangce Testing Technology Co., Ltd.

Contents

1. REPORT VERSION 3

2. SUMMARY OF TEST RESULT 4

3. SUMMARY 5

3.1. Product Description 5
3.2. Radio Specification Description 5
3.3. Modification of EUT 5
3.4. Testing Site 5

4. DFS DETECTION THRESHOLDS 6

4.1. Applicability 6
4.2. DFS Devices Requirements 7
4.3. DFS Detection Threshold Values 8

5. TEST CONFIGURATION 9

5.1. Test frequency list 9
5.2. Test mode 9
5.3. Support unit used in test configuration and system 10
5.4. Test sample information 10
5.5. Testing environmental condition 10
5.6. Statement of the measurement uncertainty 10
5.7. Equipment Used during the Test 10

6. TEST CONDITIONS AND RESULTS 11

6.1. Statistical Performance Check 11
6.2. Radar Waveform Calibration 13
6.3. Channel Loading Test Result 15
6.4. Channel Move Time, Channel Closing Transmission Time 17
6.5. Non-Occupancy Period Test 20

7. TEST SETUP PHOTOS 22

1. REPORT VERSION

Version No.	Issue date	Description
00	February 25, 2025	Original

2. SUMMARY OF TEST RESULT

No.	Test Item	Standard Requirement	Result
1	Non-Occupancy Period	FCC Part 15.407	PASS
2	DFS Detection Threshold	FCC Part 15.407	Not required
3	Channel Availability Check Time	FCC Part 15.407	Not required
4	Channel Closing Transmission Time	FCC Part 15.407	PASS
5	Channel Move Time	FCC Part 15.407	PASS
6	U-NII Detection Bandwidth	FCC Part 15.407	Not required
7	Statistical Performance Check	FCC Part 15.407	Not required

Note:

– The measurement uncertainty is not included in the test result.

– client device without radar detection capability.

3. SUMMARY

3.1. Product Description

Main unit information:	
Product Name:	5.8GHz/5.1GHz/2.4GHz WLAN/Bluetooth module
Trade Mark:	N/A
Model No.:	AW869A
Listed Model(s):	N/A
Model difference:	N/A
Power supply:	Input:DC 5V
Hardware version:	N/A
Software version:	N/A
Battery information:	N/A

3.2. Radio Specification Description

Technology:	802.11a/n(HT20), 802.11n(HT40)
Modulation:	802.11a: OFDM (64QAM, 16QAM, QPSK, BPSK) 802.11n: OFDM (64QAM, 16QAM, QPSK, BPSK)
Operation frequency:	5250MHz~5350MHz 5470MHz~5725MHz
Antenna type:	External Antenna
Antenna gain:	0.84dBi

3.3. Modification of EUT

No modifications are made to the EUT during all test items.

3.4. Testing Site

Laboratory Name	Shenzhen Bangce Testing Technology Co., Ltd.
Laboratory Location	101, building 10, Yunli Intelligent Park, Shutianpu community, Matian Street, Guangming District, Shenzhen， Guangdong, China
FCC registration number	736346

4. DFS DETECTION THRESHOLDS

4.1. Applicability

The following table from FCC KDB 905462 D02 UNII DFS Compliance Procedures New Rules v02 lists the applicable requirements for the DFS testing.

Requirement	Operational Mode		
	Master	Client Without Radar Detection	Client With Radar Detection
Non-Occupancy Period	Yes	Not required	Yes
DFS Detection Threshold	Yes	Not required	Yes
Channel Availability Check Time	Yes	Not required	Not required
U-NII Detection Bandwidth	Yes	Not required	Yes

Requirement	Operational Mode	
	Master Device or Client With Radar Detection	Client Without Radar Detection
DFS Detection Threshold	Yes	Not required
Channel Closing Transmission Time	Yes	Yes
Channel Move Time	Yes	Yes
U-NII Detection Bandwidth	Yes	Not required

Additional requirements for devices with multiple bandwidth modes	Master Device or Client with Radar Detection	Client Without Radar Detection
U-NII Detection Bandwidth and Statistical Performance Check	All BW modes must be tested	Not required
Channel Move Time and Channel Closing Transmission Time	Test using widest BW mode available	Test using the widest BW mode available for the link
All other tests	Any single BW mode	Not required
Note: Frequencies selected for statistical performance check should include several frequencies within the radar detection bandwidth and frequencies near the edge of the radar detection bandwidth.For 802.11 devices it is suggested to select frequencies in each of the bonded 20 MHz channels and the channel center frequency.		

4.2. DFS Devices Requirements

Per FCC KDB 905462 D02 UNII DFS Compliance Procedures New Rules v02 the following are the requirements for Client Devices:

a)A Client Device will not transmit before having received appropriate control signals from a Master Device.
b)A Client Device will stop all its transmissions whenever instructed by a Master Device to which it is associated and will meet the Channel Move Time and Channel Closing transmission time requirements.The Client Device will not resume any transmissions until it has again received control signals from a Master Device.
c)If a Client Device is performing In-Service Monitoring and detects a Radar Waveform above the DFS Detection Threshold,it will inform the Master Device.This is equivalent to the Master Device detecting the Radar Waveform.
d)Irrespective of Client Device or Master Device detection the Channel Move Time and Channel Closing Transmission Time requirements remain the same.
e)The client test frequency must be monitored to ensure no transmission of any type has occurred for 30 minutes.Note:If the client moves with the master,the device is considered compliant if nothing appears in the client non-occupancy period test.For devices that shut down(rather than moving channels),no beacons should appear.

Channel Move Time and Channel Closing Transmission Time requirements are listed in the following table.

Parameter	Value
Non-Occupancy period	Minimum 30 minutes
Channel Availability Check Time	60 seconds
Channel Move Time	10 seconds.See Note 1.
Channel Closing Transmission Time	200 milliseconds+an aggregate of 60 milliseconds over remaining 10 second period.See Notes 1 and 2.
U-NII Detection Bandwidth	Minimum 100%of the U-NII 99%transmission power bandwidth.See Note 3.
Note 1: Channel Move Time and the Channel Closing Transmission Time should be performed with Radar Type 0.The measurement timing begins at the end of the Radar Type 0 burst. **Note 2:**The Channel Closing Transmission Time is comprised of 200 milliseconds starting at the beginning of the Channel Move Time plus any additional intermittent control signals required to facilitate a Channel move(an aggregate of 60 mili seconds)during the remainder of the 10 second period.The aggregate duration of control signals will not count quiet periods in between transmissions. **Note 3:**During the U-NII Detection Bandwidth detection test,radar type 0 should be used.For each frequency step the minimum percentage of detection is 90 percent.Measurements are performed with no data traffic.	

4.3. DFS Detection Threshold Values

The DFS detection thresholds are defined for Master devices and Client Devices with In-service monitoring.These detection thresholds are listed in the following table.

Maximum Transmit Power	Value (See Notes 1,2,and 3)
EIRP≥200 milliwatt	-64dBm
EIRP<200 milliwatt and power spectral density<10 dBm/MHz	-62dBm
EIRP<200 milliwatt that do not meet the power spectral density requirement	-64dBm
Note 1: This is the level at the input of the receiver assuming a 0 dBi receive antenna. **Note 2:**Throughout these test procedures an additional 1 dB has been added to the amplitude of the test transmission waveforms to account for variations in measurement equipment.This will ensure that the test signal is at or above the detection threshold level to trigger a DFS response. **Note3:**EIRP is based on the highest antenna gain.For MIMO devices refer to KDB Publication 662911 D01.	

5. TEST CONFIGURATION

This report has been prepared to demonstrate compliance with the requirements for Dynamic Frequency Selection (DFS) as stated in FCC CFR 47 PART 15E(15.407). Testing was performed in accordance with the measurement procedure described in FCC KDB 905462 D02 v02,KDB 905462 D03,KDB 905462 D04

5.1. Test frequency list

U-NI-2A

Bandwidth (MHz)	Lowest Channel (LCH) (MHz)	Middle Channel (MCH) (MHz)	Highest Channel (HCH) (MHz)
20	5260	5300	5320
40	5270	/	5310
80	/	5290	/

U-NI-2C

Bandwidth (MHz)	Lowest Channel (LCH) (MHz)	Middle Channel (MCH) (MHz)	Highest Channel (HCH) (MHz)
20	5500	5600	5700
40	5510	5590	5670
80	5530	/	5610

5.2. Test mode

Test mode:	Mode 1:Communication

5.3. Support unit used in test configuration and system

The EUT has been associated with peripherals and configuration operated in a manner tended to maximize its emission characteristics in a typical application.

The following peripheral devices and interface cables were connected during the measurement:

Item	Equipment name	Trade Name	Model No.	FCC ID
1	-	-	-	-

5.4. Test sample information

Type	sample no.
Engineer sample	CISR250113110-S01
Normal sample	CISR250113110-S02

5.5. Testing environmental condition

Type	Requirement	Actual
Temperature:	15~35°C	25°C
Relative Humidity:	25~75%	50%
Air Pressure:	860~1060mbar	1000mbar

5.6. Statement of the measurement uncertainty

No.	Test Items	Measurement Uncertainty
1	DFS Threshold (radiated)	1.68dB
2	DFS Threshold (conducted)	1.74dB

This uncertainty represents an expanded uncertainty expressed at approximately the 95% confidence level using a coverage factor of k=1.96.

5.7. Equipment Used during the Test

SOFTWARE USED:

The engineering test program was provided(iperf).

Item	Equipment name	Manufacturer	Model	Serial No.	Calibration date	Due date
1	MXG RF Signal Generator	Agilent	N5181A	MY50145362	2025-01-08	2026-01-07
2	Spectrum analyzer	R&S	FSV-40N	102130	2025-01-08	2026-01-07
3	Vector Signal Generator	Agilent	N5182A	MY50142364	2025-01-08	2026-01-07
4	Power Meter	WCS	WCS-PM	WCSPM230405A	2025-01-08	2026-01-07

6. TEST CONDITIONS AND RESULTS

6.1. Statistical Performance Check

Test Requirement:

KDB 935210 D02, Clause 5.1 Table 2
Frequencies selected for statistical performance check (Section 7.8.4) should include several frequencies within the radar detection bandwidth and frequencies near the edge of the radar detection bandwidth.

Test Limit:

Table 5 – Short Pulse Radar Test Waveforms

Radar Type	Pulse Width (µsec)	PRI (µsec)	Number of Pulses	Minimum Percentage of Successful Detection	Minimum Number of Trials
0	1	1428	18	See Note 1	See Note 1
1	1	Test A: 15 unique PRI values randomly selected from the list of 23 PRI values in Table 5a	$\text{Roundup}\left\{\left(\frac{1}{360}\right)\cdot\left(\frac{19\cdot 10^6}{\text{PRI}_{\mu sec}}\right)\right\}$	60%	30
		Test B: 15 unique PRI values randomly selected within the range of 518-3066 µsec, with a minimum increment of 1 µsec, excluding PRI values selected in Test A			
2	1-5	150-230	23-29	60%	30
3	6-10	200-500	16-18	60%	30
4	11-20	200-500	12-16	60%	30
Aggregate (Radar Types 1-4)				80%	120

Note 1: Short Pulse Radar Type 0 should be used for the detection bandwidth test, channel move time, and channel closing time tests.

A minimum of 30 unique waveforms are required for each of the Short Pulse Radar Types 2 through 4. If more than 30 waveforms are used for Short Pulse Radar Types 2 through 4, then each additional waveform must also be unique and not repeated from the previous waveforms. If more than 30 waveforms are used for Short Pulse Radar Type 1, then each additional waveform is generated with Test B and must also be unique and not repeated from the previous waveforms in Tests A or B.

Table 6 – Long Pulse Radar Test Waveform

Radar Type	Pulse Width (µsec)	Chirp Width (MHz)	PRI (µsec)	Number of Pulses per *Burst*	Number of *Bursts*	Minimum Percentage of Successful Detection	Minimum Number of Trials
5	50-100	5-20	1000-2000	1-3	8-20	80%	30

The parameters for this waveform are randomly chosen. Thirty unique waveforms are required for the Long Pulse Radar Type waveforms. If more than 30 waveforms are used for the Long Pulse Radar Type waveforms, then each additional waveform must also be unique and not repeated from the previous waveforms.

Table 7 – Frequency Hopping Radar Test Waveform

Radar Type	Pulse Width (µsec)	PRI (µsec)	Pulses per Hop	Hopping Rate (kHz)	Hopping Sequence Length (msec)	Minimum Percentage of Successful Detection	Minimum Number of Trials
6	1	333	9	0.333	300	70%	30

For the Frequency Hopping Radar Type, the same Burst parameters are used for each waveform. The hopping sequence is different for each waveform and a 100-length segment is selected from the hopping sequence defined by the following algorithm: 4

	The first frequency in a hopping sequence is selected randomly from the group of 475 integer frequencies from 5250 – 5724 MHz. Next, the frequency that was just chosen is removed from the group and a frequency is randomly selected from the remaining 474 frequencies in the group. This process continues until all 475 frequencies are chosen for the set. For selection of a random frequency, the frequencies remaining within the group are always treated as equally likely.
Test Method:	KDB 935210 D02, Clause 7.8.4,KDB 905462 D03,KDB 905462 D04
Procedure:	The steps below define the procedure to determine the minimum percentage of successful detection requirements found in **Tables 5-7** when a radar burst with a level equal to the *DFS Detection Threshold* + 1dB is generated on the *Operating Channel* of the U-NII device *(In- Service Monitoring).* 1. One frequency will be chosen from the *Operating Channels* of the UUT within the 5250-5350 MHz or 5470-5725 MHz bands. 2. In case the UUT is a U-NII device operating as a *Client Device* (with or without Radar Detection), a U-NII device operating as a *Master Device* will be used to allow the UUT (Client device) to *Associate* with the *Master Device* . In case the UUT is a *Master Device* , a U-NII device operating as a *Client Device* will be used and it is assumed that the Client will *Associate* with the UUT (Master). In both cases for conducted tests, the *Radar Waveform* generator will be connected to the *Master Device* . For radiated tests, the emissions of the *Radar Waveform* generator will be directed towards the *Master Device* . If the *Master Device* has antenna gain, the main beam of the antenna will be directed toward the radar emitter. Vertical polarization is used for testing. 3. Stream the channel loading test file from the *Master Device* to the Client Device on the test *Channel* for the entire period of the test. 4. At time T0 the *Radar Waveform* generator sends the individual waveform for each of the Radar Types 1- 6 in **Tables 5-7** , at levels defined in **Table 3** , on the *Operating Channel* . An additional 1 dB is added to the radar test signal to ensure it is at or above the *DFS Detection Threshold* , accounting for equipment variations/errors. 5. Observe the transmissions of the UUT at the end of the Burst on the *Operating Channel* for duration greater than 10 seconds for Radar Type 0 to ensure detection occurs. 6. Observe the transmissions of the UUT at the end of the Burst on the *Operating Channel* for duration greater than 22 seconds for Long Pulse Radar Type 5 to ensure detection occurs. 7. In case the UUT is a U-NII device operating as a *Client Device* with *In-Service Monitoring* , perform steps 1 to 6.

Test Setup Diagram

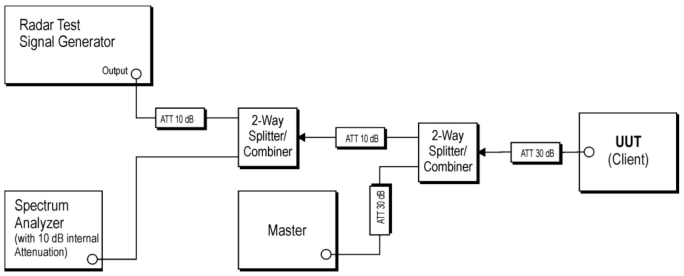

6.2. Radar Waveform Calibration

Procedure:	The Interference Radar Detection Threshold Level is (-62dBm) + (-0.45) [dBi] + 1 dB= -61.45dBm that had been taken into account the output power range and antenna gain. The above equipment setup was used to calibrate the conducted Radar Waveform. A vector signal generator was utilized to establish the test signal level for each radar type. During this process there were replace 50ohm terminal form Master and Client device and no transmissions by either the Master or Client Device. The spectrum analyzer was switched to the zero span (Time Domain) at the frequency of the Radar Wave form generator. Peak detection was used. The spectrum analyzer resolution bandwidth (RBW and video bandwidth (VBW) were set to at least 3MHz. The vector signal generator amplitude was set so that the power level measured at the spectrum analyzer was (-63.67)+ (-0.45) [dBi] + 1 dB= -64.12dBm.Capture the spectrum analyzer plots on short pulse radar types, long pulse radar type and hopping radar waveform.

E.U.T. Operation

Operating Environment:					
Temperature :	22.3 °C	Humidity:	55.7 %	Atmospheric Pressure:	101.5 kPa
Pre test mode:	TX mode				
Final test mode:	TX mode				

Test Setup Diagram

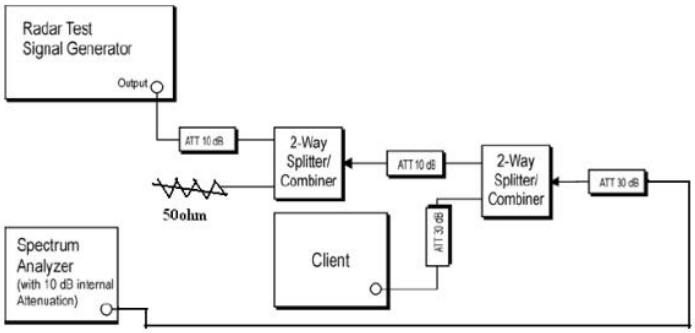

Test Data

Radar Type 0

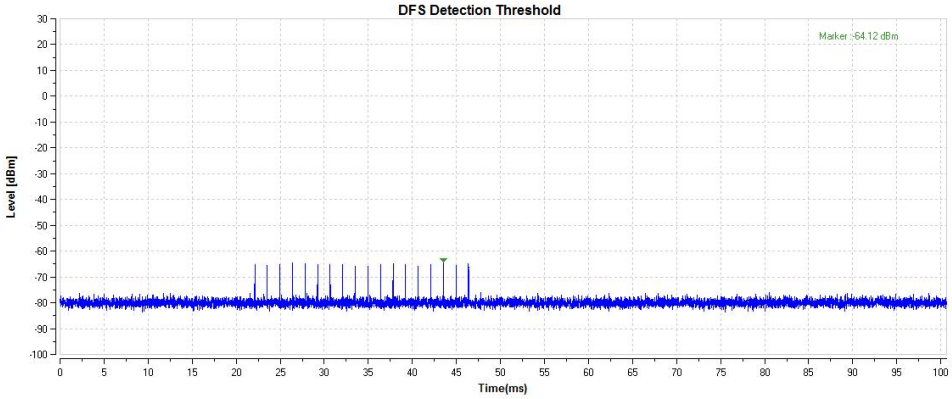

Trial List Table - FCC-13-22

Save Load Trigger Download All

Sample Rate 10 MHz

Trial List

	Trial Id	Radar Type	Pulse Width (us)	PRI (us)	Number of Pulses	Waveform Length (us)
Download	0	Type 0	1.0	1428.0	18	25704.0
Download	1	Type 0	1.0	1428.0	18	25704.0
Download	2	Type 0	1.0	1428.0	18	25704.0
Download	3	Type 0	1.0	1428.0	18	25704.0
Download	4	Type 0	1.0	1428.0	18	25704.0
Download	5	Type 0	1.0	1428.0	18	25704.0
Download	6	Type 0	1.0	1428.0	18	25704.0
Download	7	Type 0	1.0	1428.0	18	25704.0
Download	8	Type 0	1.0	1428.0	18	25704.0
Download	9	Type 0	1.0	1428.0	18	25704.0
Download	10	Type 0	1.0	1428.0	18	25704.0
Download	11	Type 0	1.0	1428.0	18	25704.0
Download	12	Type 0	1.0	1428.0	18	25704.0
Download	13	Type 0	1.0	1428.0	18	25704.0
Download	14	Type 0	1.0	1428.0	18	25704.0
Download	15	Type 0	1.0	1428.0	18	25704.0
Download	16	Type 0	1.0	1428.0	18	25704.0
Download	17	Type 0	1.0	1428.0	18	25704.0
Download	18	Type 0	1.0	1428.0	18	25704.0
Download	19	Type 0	1.0	1428.0	18	25704.0
Download	20	Type 0	1.0	1428.0	18	25704.0
Download	21	Type 0	1.0	1428.0	18	25704.0
Download	22	Type 0	1.0	1428.0	18	25704.0
Download	23	Type 0	1.0	1428.0	18	25704.0
Download	24	Type 0	1.0	1428.0	18	25704.0
Download	25	Type 0	1.0	1428.0	18	25704.0
Download	26	Type 0	1.0	1428.0	18	25704.0
Download	27	Type 0	1.0	1428.0	18	25704.0
Download	28	Type 0	1.0	1428.0	18	25704.0

6.3. Channel Loading Test Result

Procedure:	System testing was performed with the designated MPEG test file that streams full motion video from the Master to the Client in full motion video mode using the media player with the V2.61 Codec package. This file is used by IP and Frame based systems for loading the test channel during the In-service compliance testing of the U-NII device

E.U.T. Operation

Operating Environment:					
Temperature :	22.3 °C	Humidity:	55.7 %	Atmospheric Pressure:	101.5 kPa
Pre test mode:	TX mode				
Final test mode:	TX mode				

Test Setup Diagram

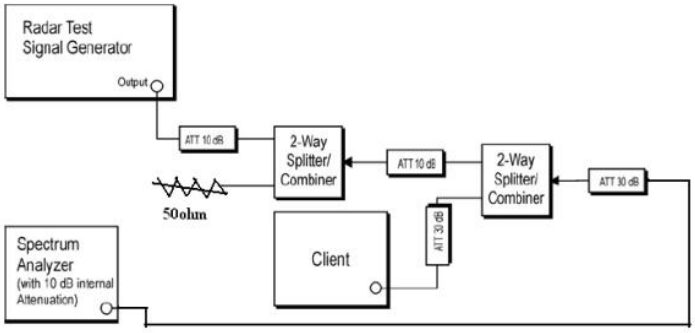

IEEE 802.11ax
Channel 58 / 5290 MHz

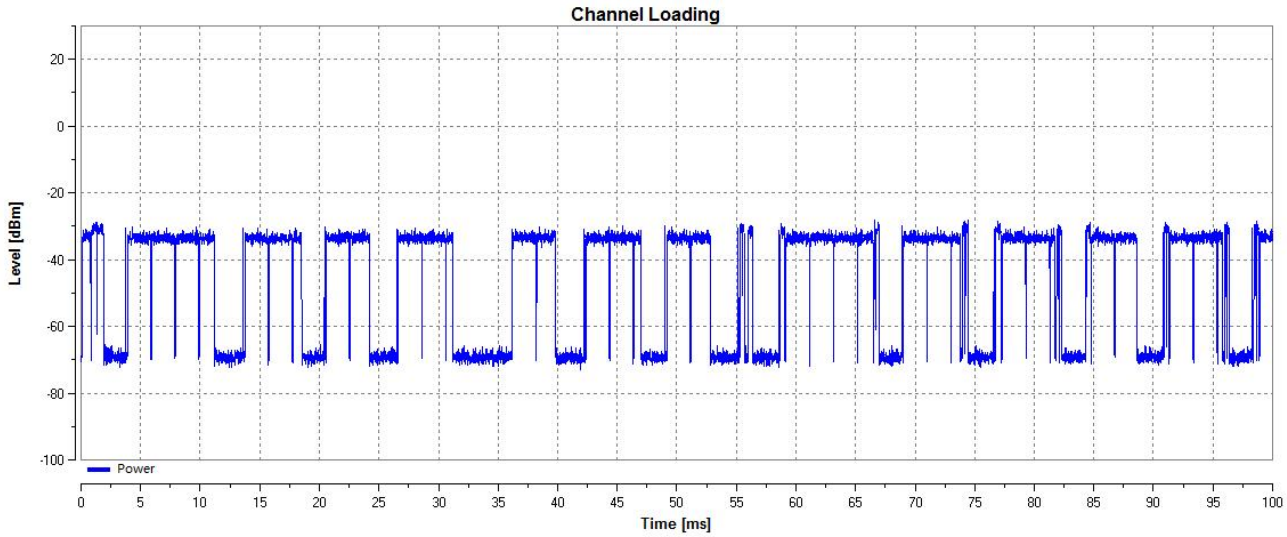

IEEE 802.11ax

Channel 106 / 5530 MHz

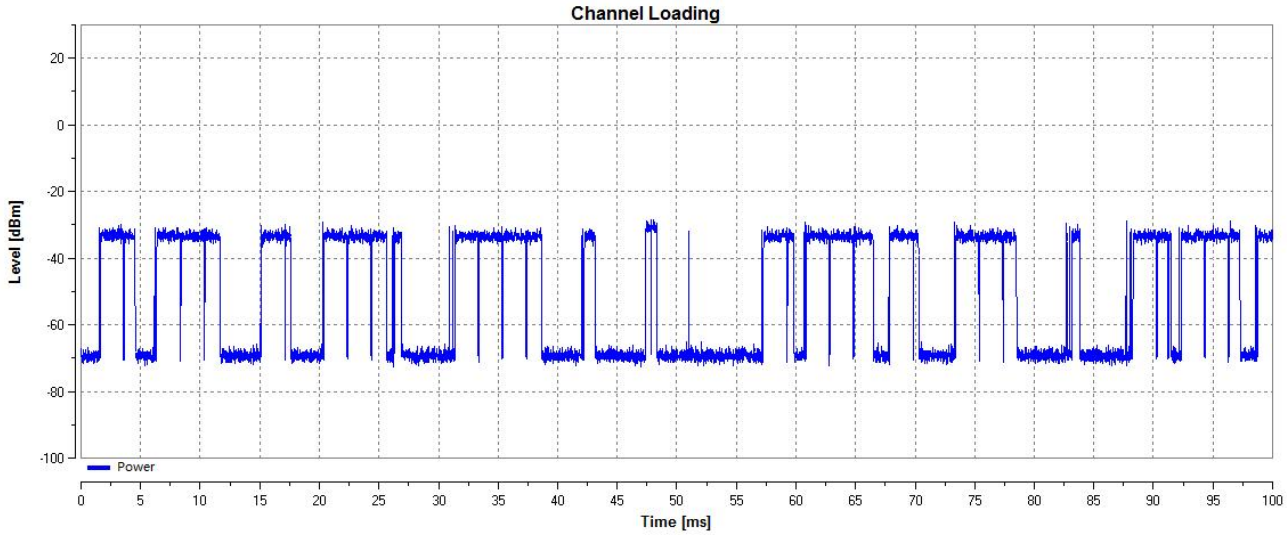

Test Mode	Test Frequency	Packet ratio	Requirement ratio	Test Result
IEEE 802.11ax-HT80	5290	61.45%	≥17%	Pass
IEEE 802.11ax-HT80	5530	56.16%	≥17%	Pass
Note: System testing was performed with the designated iperf test file. This file is used by IP and Frame based systems for loading the test channel during the In-service compliance testing of the U-NII device. Packet ratio＝ Time On/ (Time On + off Time).				

6.4. Channel Move Time, Channel Closing Transmission Time

Test Requirement:	47 CFR Part 15.407(h)(2)(iii)
Test Limit:	The EUT has In-Service Monitoring function to continuously monitor the radar signals.If the radar is detected,must leave the channel(Shutdown).The Channel Move Time to cease all transmissions on the current channel upon detection of a Radar Waveform above the DFS Detection Threshold within 10 sec.The total duration of Channel Closing Transmission Time is 260ms,consisting of data signals and the aggregate of control signals,by a U-NII device during the Channel Move Time.The Non-Occupancy Period time is 30 minute during which a Channel will not be utilized after a Radar Waveform is detected on that Channel.
Test Method:	KDB 905462 D02, Clause 7.8.3
Procedure:	1.The test should be performed with Radar Type 0.The measurement timing begins at the end of the Radar Type 0. 2.When the radar burst with a level equal to the DFS Detection Threshold+1dB is generated on the Operating Channel of the U-NII device.A U-NII device operating as a Master Device will associate with the Client Device at Channel.Stream the MPEG test file from the Master Device to the Client Device on the selected Channel for the entire period of the test.At time TO the Radar Waveform generator sends a Burst of pulses for each of the radar types at Detection Threshold+1dB. 2.Observe the transmissions of the EUT at the end of the radar Burst on the Operating Channel. Measure and record the transmissions from the EUT during the observation time(Channel Move Time). 3.Measurement of the aggregate duration of the Channel Closing Transmission Time method.With the spectrum analyzer set to zero span tuned to the center frequency of the EUT operating channel at the radar simulated frequency,peak detection,and max hold,the dwell time per bin is given by: Dwell(1.5ms)=S(12 sec)/B(8000);where Dwell is the dwell time per spectrum analyzer sampling bin,S is the sweep time and B is the number of spectrum analyzer sampling bins.An upper bound of the aggregate duration of the intermittent control signals of Channel Closing Transmission Time is calculated by:40MHz:C(6.00 ms)=N(4)X Dwell(1.5 ms);where C is the Closing Time,N is the number of spectrum analyzer sampling bins showing a U-NII transmission and Dwell is the dwell time per bin. 4.Measure the UUT for more than 30 minutes following the channel close/move time to verify that the UUT does not resume any transmissions on this Channel.

E.U.T. Operation

Operating Environment:					
Temperature:	22.3 °C	Humidity:	55.7 %	Atmospheric Pressure:	101.5 kPa
Pre test mode:	TX mode				
Final test mode:	TX mode				

Test Setup Diagram

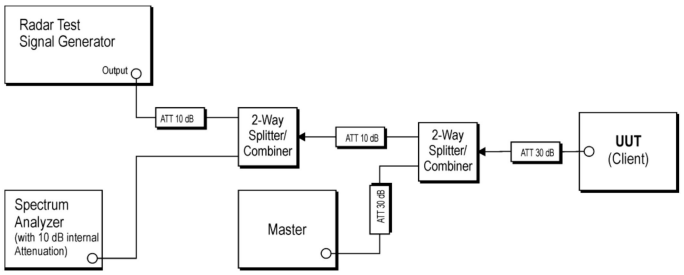

Test Data

IEEE 802.11ax
Channel 58 / 5290 MHz

Channel Move Time	Limit
1.2869s	10s
Channel Close Time	Limit
106.92ms	200ms

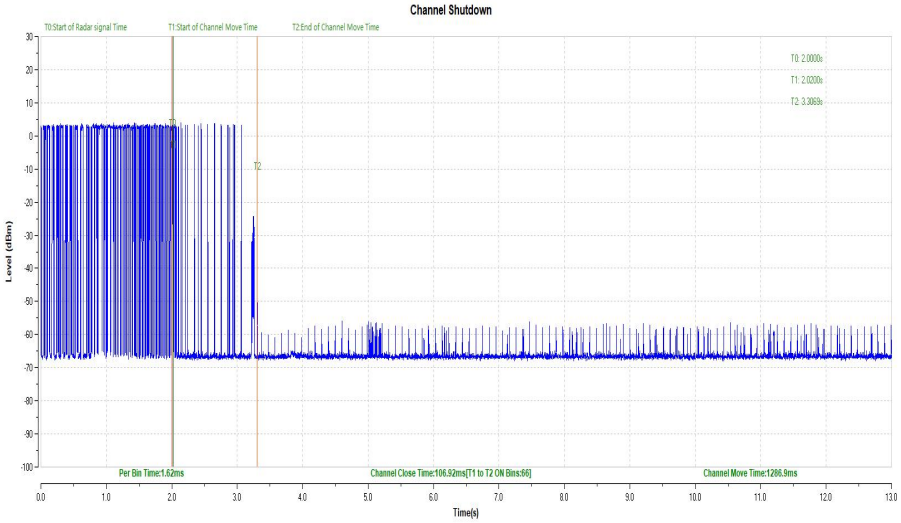

IEEE 802.11ax

Channel 106 / 5530 MHz

Channel Move Time	Limit
1.3625s	10s
Channel Close Time	Limit
182.5ms	200ms

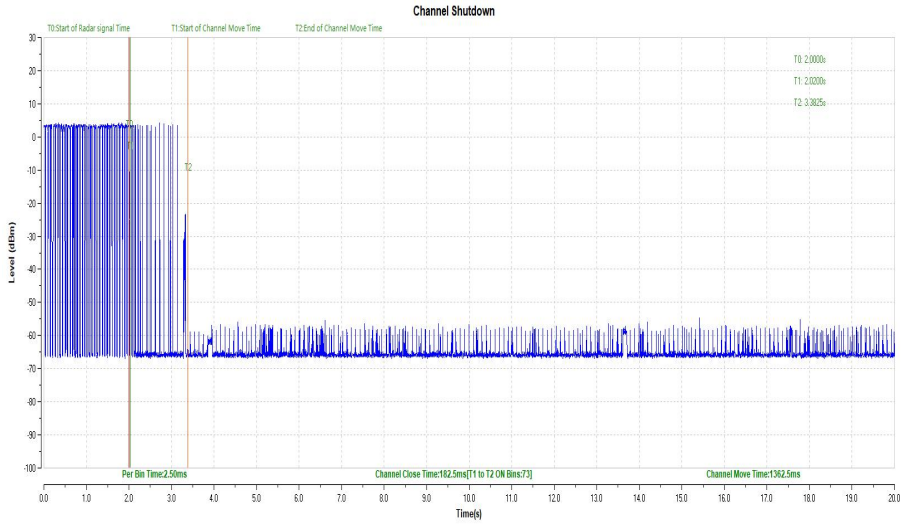

6.5. Non-Occupancy Period Test

Test Requirement:	47 CFR Part 15.407(h)(2)(iv)
Test Limit:	A channel that has been flagged as containing a radar system, either by a channel availability check or in-service monitoring, is subject to a non-occupancy period of at least 30 minutes. The non-occupancy period starts at the time when the radar system is detected.
Test Method:	KDB 905462 D02, Clause 7.8.3
Procedure:	The steps below define the procedure to determine the above-mentioned parameters when a radar *Burst* with a level equal to the *DFS Detection Threshold* + 1dB is generated on the *Operating Channel* of the U-NII device *(In- Service Monitoring).* 1. One frequency will be chosen from the *Operating Channels* of the UUT within the 5250-5350 MHz or 5470-5725 MHz bands. For 802.11 devices, the test frequency must contain control signals. This can be verified by disabling channel loading and monitoring the spectrum analyzer. If no control signals are detected, another frequency must be selected within the emission bandwidth where control signals are detected. 2. In case the UUT is a U-NII device operating as a *Client Device* (with or without DFS), a U-NII device operating as a *Master Device* will be used to allow the UUT (Client device) to *Associate* with the *Master Device* . In case the UUT is a *Master Device* , a U-NII device operating as a *Client Device* will be used and it is assumed that the Client will *Associate* with the UUT (Master). In both cases for conducted tests, the *Radar Waveform* generator will be connected to the *Master Device* . For radiated tests, the emissions of the *Radar Waveform* generator will be directed towards the *Master Device* . If the *Master Device* has antenna gain, the main beam of the antenna will be directed toward the radar emitter. Vertical polarization is used for testing. 3. Stream the channel loading test file from the *Master Device* to the *Client Device* on the test *Channel* for the entire period of the test. 4. At time T0 the *Radar Waveform* generator sends a *Burst* of pulses for one of the Radar Type 0 in **Table 5** at levels defined in **Table 3** , on the *Operating Channel* . An additional 1 dB is added to the radar test signal to ensure it is at or above the *DFS Detection Threshold* , accounting for equipment variations/errors. 5. Observe the transmissions of the UUT at the end of the radar *Burst* on the *Operating Channel* for duration greater than 10 seconds. Measure and record the transmissions from the UUT during the observation time (*Channel Move Time)* . Measure and record the *Channel Move Time* and *Channel Closing Transmission Time* if radar detection occurs. **Figure 17** illustrates *Channel Closing Transmission Time.* 6. When operating as a *Master Device* , monitor the UUT for more than 30 minutes following instant T2 to verify that the UUT does not resume any transmissions on this *Channel* . Perform this test once and record the measurement result. 7. In case the UUT is a U-NII device operating as a *Client Device* with *In-Service Monitoring* , perform steps 1 to 6. 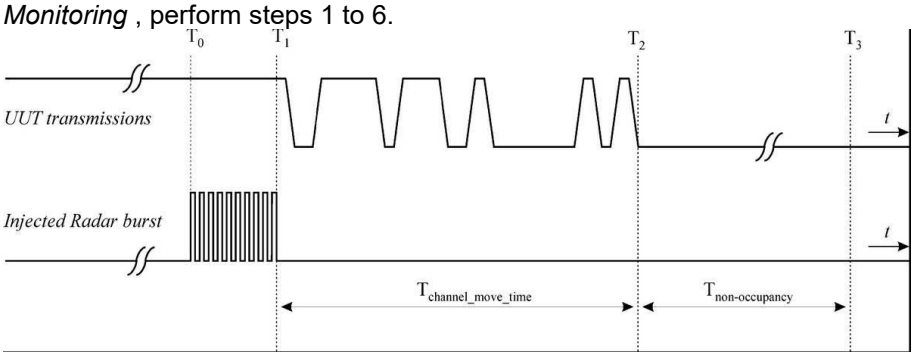 *Figure 17: Example of Channel Closing Transmission Time & Channel Closing Time*

Test Setup Diagram

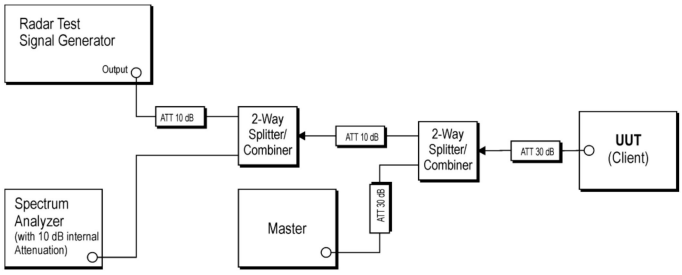

Test Data

Not Applicable.

IEEE 802.11ax
Channel 58 / 5290 MHz

Non-Occupancy Period (min)	Limit
⩾30min	⩾30 min

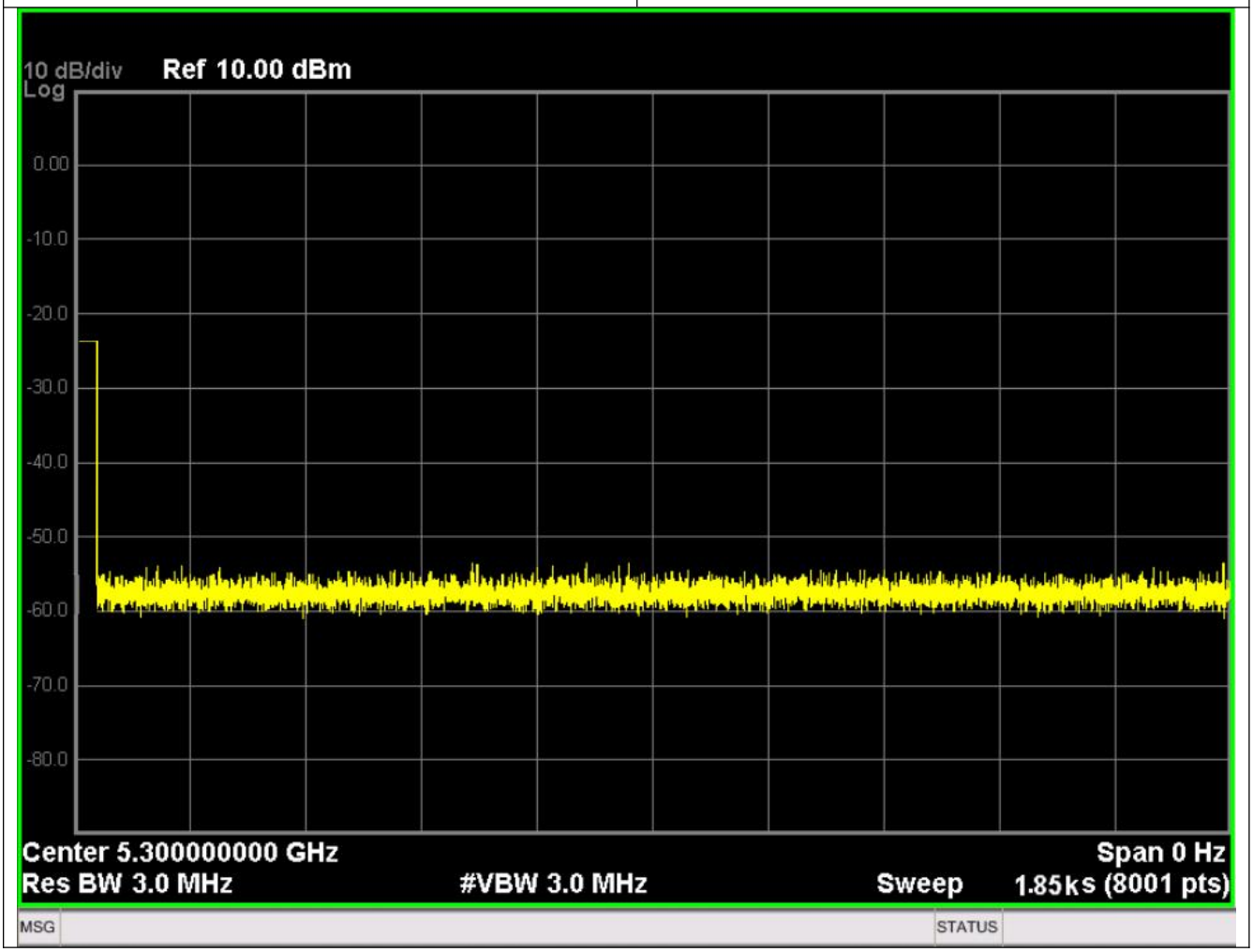

7. TEST SETUP PHOTOS

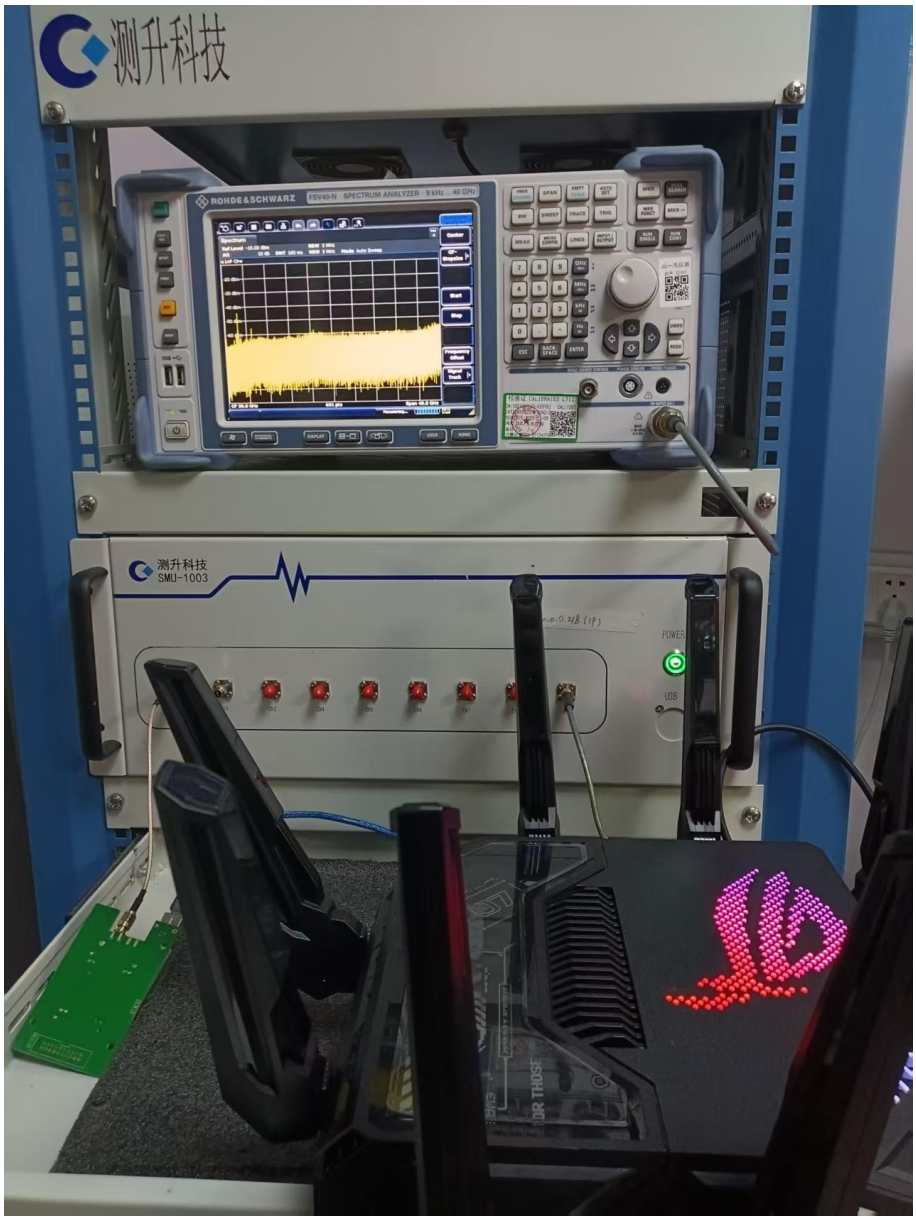

------End of the report------