AW869C

5.8GHz/5.1GHz/2.4GHz WLAN/Bluetooth module

拟制 Design	审核 Check	批准 Approve	版本 Version	日期 Date
			V1.0	2023.05.29

AW869C_Series Module Datasheet		
Module Type	Description	Remark
AW869C	AIC8800D80, a/b/g/n/ac/ax, dual band, BW80M, 1T1R, WiFi (SDIO3.0)+BT5.4(UART), 1-ANT type, shielding	

更改记录

Reversion History

版本 Version	日期 Date	更改内容 Modification
1.0	2023.05.29	First release
1.1	2025.02.12	更新 Block Diagram

目录

Contents

1. Overview ····· 3
2. Features ····· 3
3. Block Diagram ····· 4
4. General Specification ····· 5
5. RF Specification ····· 5
5.1 2.4 GHz RF Specification ····· 5
5.2 5 GHz RF Specification ····· 7
5.3 Bluetooth Section ····· 10
6. Recommended Operating Rating ····· 11
7. Physical Dimensions ····· 12
8. Pin Description ····· 13
9. Suplier ····· 15
10. Physical photo ····· 15
11. Layout Recommendation ····· 16
12. Baking & Storage Temperature & Recommended Reflow Profile ····· 17
12.1 Baking & Storage Teperature ····· 17
12.2 Recommended Reflow Profile ····· 18
13. Packing information ····· 18
13.1 Carrier size Detail: ····· 18
13.2 Packaging Detail ····· 19

1. Overview

The AW869C is a highly integrated module with Dual band WiFi6,BT5.4; combination solution to support 1 × 1 IEEE 802.11a/b/g/n/ac/ax WLAN standards and BT 5.4 enabling seamless integration of WLAN/BT and low-energy technology.

2. Features

- Supports a low-power SDIO 3.0 interface for WLAN and a UART/PCM interface for BT
- Provides a highly integrated WLAN system-on-chip (SoC) for 5 GHz 802.11ax/ac, or 2.4 GHz/5 GHz 802.11ax/n WLAN applications
- Supports WLAN 2.4&5 GHz , 20 MHz/40MHz/80 MHz
- Support WLAN 2.4GHz and 5GHz band channels
- Supports BT 5.4, BLE, and ANT+ and backward compatibility with BT 1.x and BT 2.x+ Enhanced Data Rate
- Supports a single-ended RF port for cleaner and lower cost design
- Support MU-MIMO,OFDMA

3. Block Diagram

AW869C：1-ANT type

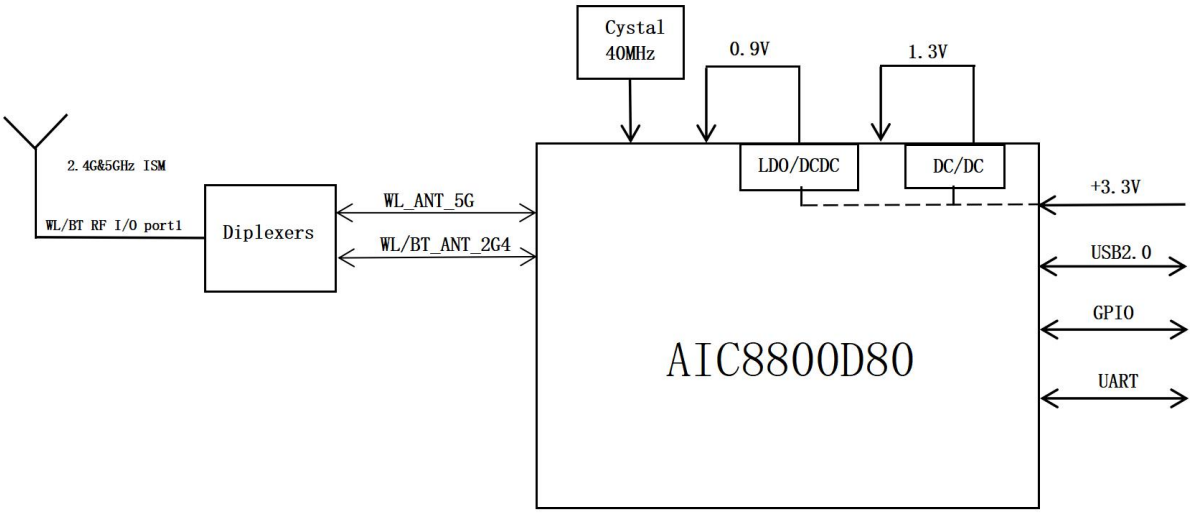

AW869C2：2-ANT type

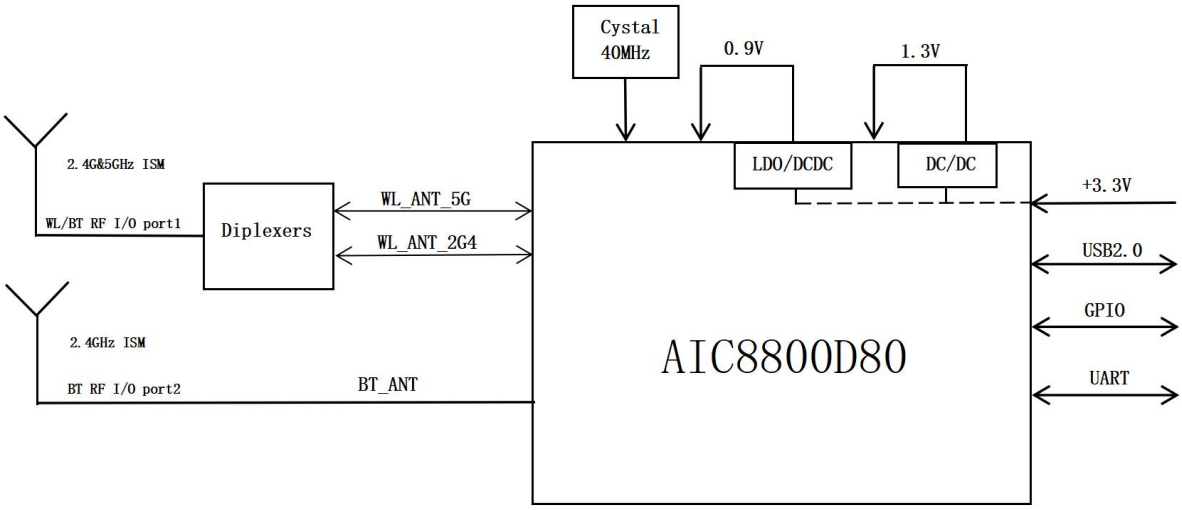

4. General Specification

Model	AW869C
Product Name	5.8GHz/5.1GHz/2.4GHz WLAN/Bluetooth module
Major Chipset	AIC8800D80
Standard	802.11a/b/g/n/ac/ax
Modulation Method	BPSK/ QPSK/ 16-QAM/ 64-QAM/256-QAM/1024-QAM
Frequency Band	Dual band 2.4&5GHz ISM
WiFi Interface	SDIO3.0
BT Interface	UART/PCM
Operating Temperature	-20° C ~ 70° C
Storage Temperature	-20° C ~ 125°C
Humidity	5% to 90% maximum
Dimension	12x12x1.7 (LxWxH) ±0.2mm

5. RF Specification

5.1 2.4 GHz RF Specification

Feature	Description
WLAN Standard	IEEE 802.11b/g/n/ax WiFi compliant
Frequency Range	2.400 GHz ~ 2.497 GHz (2.4 GHz ISM Band)
Number of Channels	2.4GHz: Ch1 ~ Ch14
Modulation	802.11b : DQPSK, DBPSK, CCK 802.11 g/n : OFDM /64-QAM,16-QAM, QPSK, BPSK 802.11 ax : OFDMA /1024-QAM,256-QAM, 64-QAM, 16-QAM, QPSK, BPSK
Output Power	802.11b / 1Mbps : 17dBm ± 2 dB @ EVM ≤ -10dB 802.11b /11Mbps : 17dBm ± 2 dB @ EVM ≤ -15dB
	802.11g / 6Mbps : 17dBm ± 2 dB @ EVM ≤ -5dB 802.11g /54Mbps : 15 dBm ± 2 dB @ EVM ≤ -28dB
	802.11n /MCS0 : 17 dBm ± 2 dB @ EVM ≤ -5dB 802.11n /MCS7 : 14 dBm ± 2 dB @ EVM ≤ -30dB

	802.11ax /HE0(20/40M) : 17 dBm ± 2 dB @ EVM ≤ -5dB
	802.11ax /HE11(20/40M) : 13 dBm ± 2 dB @ EVM ≤ -34dB
Receive Sensitivity (11b, 20MHz) @8% PER	- 1Mbps PER @ -93 dBm, typical
	- 2Mbps PER @ -90 dBm, typical
	- 5.5Mbps PER @ -88 dBm, typical
	- 11Mbps PER @ -86 dBm, typical
Receive Sensitivity (11g, 20MHz) @10% PER	- 6Mbps PER @ -91 dBm, typical
	- 9Mbps PER @ -89 dBm, typical
	- 12Mbps PER @ -86 dBm, typical
	- 18Mbps PER @ -83 dBm, typical
	- 24Mbps PER @ -80 dBm, typical
	- 36Mbps PER @ -77 dBm, typical
	- 48Mbps PER @ -74 dBm, typical
	- 54Mbps PER @ -72 dBm, typical
Receive Sensitivity (11n, 20MHz) @10% PER	- MCS=0 PER @ -90 dBm, typical
	- MCS=1 PER @ -87 dBm, typical
	- MCS=2 PER @ -84 dBm, typical
	- MCS=3 PER @ -81 dBm, typical
	- MCS=4 PER @ -78 dBm, typical
	- MCS=5 PER @ -75 dBm, typical
	- MCS=6 PER @ -72 dBm, typical
	- MCS=7 PER @ -70 dBm, typical
Receive Sensitivity (11n, 40MHz) @10% PER	- MCS=0 PER @ -87 dBm, typical
	- MCS=1 PER @ -84 dBm, typical
	- MCS=2 PER @ -81 dBm, typical
	- MCS=3 PER @ -78 dBm, typical
	- MCS=4 PER @ -75 dBm, typical
	- MCS=5 PER @ -72 dBm, typical
	- MCS=6 PER @ -69 dBm, typical
	- MCS=7 PER @ -67 dBm, typical
Receive Sensitivity (11ax, 20MHz) @10% PER	- HE=0 PER @ -90 dBm, typical
	- HE=1 PER @ -88 dBm, typical
	- HE=2 PER @ -86 dBm, typical
	- HE=3 PER @ -84 dBm, typical
	- HE=4 PER @ -81 dBm, typical

	- HE=5 PER @ -79 dBm, typical
	- HE=6 PER @ -76 dBm, typical
	- HE=7 PER @ -73 dBm, typical
	- HE=8 PER @ -70 dBm, typical
	- HE=9 PER @ -68 dBm, typical
Receive Sensitivity (11ax, 40MHz) @10% PER	- HE=0 PER @ -88 dBm, typical
	- HE=1 PER @ -86 dBm, typical
	- HE=2 PER @ -83 dBm, typical
	- HE=3 PER @ -80 dBm, typical
	- HE=4 PER @ -77 dBm, typical
	- HE=5 PER @ -74 dBm, typical
	- HE=6 PER @ -72 dBm, typical
	- HE=7 PER @ -69 dBm, typical
	- HE=8 PER @ -66 dBm, typical
	- HE=9 PER @ -64 dBm, typical
Maximum Input Level	802.11b : 0 dBm
	802.11g/n/ax : 0 dBm
Antenna Reference	Small antennas with 0~2 dBi peak gain

5.2 5 GHz RF Specification

Feature	Description
WLAN Standard	IEEE 802.11a/n/ac/ax WiFi compliant
Frequency Range	4.900 GHz ~ 5.845 GHz (5.0 GHz ISM Band)
Number of Channels	5.0GHz: Please see the table
Modulation	802.11a : OFDM /64-QAM, 16-QAM, QPSK, BPSK 802.11n : OFDM /64-QAM, 16-QAM, QPSK, BPSK 802.11ac : OFDM /256-QAM
	802.11a / 6Mbps : @ EVM ≤ -5dB 802.11a /54Mbps : @ EVM ≤ -25dB
	802.11n HT20 /MCS0 : @ EVM ≤ -5dB 802.11n HT20 /MCS7 : @ EVM ≤ -28dB
	802.11n HT40 /MCS0 : @ EVM ≤ -5dB 802.11n HT40 /MCS7 : @ EVM ≤ -28dB

	802.11ac VHT20 /MCS0 : @ EVM ≤ -5dB 802.11ac VHT20 /MCS8 : @ EVM ≤ -30dB
	802.11ac VHT40 /MCS0 : @ EVM ≤ -5dB 802.11ac VHT40 /MCS9 : @ EVM ≤ -32dB
	802.11ac VHT80 /MCS0 : B @ EVM ≤ -5dB 802.11ac VHT80 /MCS9 : @ EVM ≤ -32dB
	802.11ax HE0(20M) : @ EVM ≤ -5dB 802.11ax HE11(20M) : @ EVM ≤ -34dB
	802.11ax HE0(40M) : @ EVM ≤ -5dB 802.11ax HE11(40M) : @ EVM ≤ -34dB
	802.11ax HE0(80M) : @ EVM ≤ -5dB 802.11ax HE11(80M) : @ EVM ≤ -34dB
Receive Sensitivity (11a, 20MHz) @10% PER	- 6Mbps PER @ -93dBm, typical
	- 9Mbps PER @ -90 dBm, typical
	- 12Mbps PER @ -87 dBm, typical
	- 18Mbps PER @ -84 dBm, typical
	- 24Mbps PER @ -81 dBm, typical
	- 36Mbps PER @ -78 dBm, typical
	- 48Mbps PER @ -76 dBm, typical
	- 54Mbps PER @ -74 dBm, typical
Receive Sensitivity (11n, 20MHz) @10% PER	- MCS=0 PER @ -92 dBm, typical
	- MCS=1 PER @ -89 dBm, typical
	- MCS=2 PER @ -86 dBm, typical
	- MCS=3 PER @ -83 dBm, typical
	- MCS=4 PER @ -80 dBm, typical
	- MCS=5 PER @ -77 dBm, typical
	- MCS=6 PER @ -74 dBm, typical
	- MCS=7 PER @ -72 dBm, typical
Receive Sensitivity (11n, 40MHz) @10% PER	- MCS=0 PER @ -90 dBm, typical
	- MCS=1 PER @ -87 dBm, typical
	- MCS=2 PER @ -84 dBm, typical
	- MCS=3 PER @ -81 dBm, typical
	- MCS=4 PER @ -78 dBm, typical
	- MCS=5 PER @ -75 dBm, typical
	- MCS=6 PER @ -72 dBm, typical

	- MCS=7 PER @ -70 dBm, typical
Receive Sensitivity (11ac, 20MHz) @10% PER	- MCS=0, NSS1 PER @ -91 dBm, typical
	- MCS=1, NSS1 PER @ -88 dBm, typical
	- MCS=2, NSS1 PER @ -85 dBm, typical
	- MCS=3, NSS1 PER @ -82 dBm, typical
	- MCS=4, NSS1 PER @ -79 dBm, typical
	- MCS=5, NSS1 PER @ -76dBm, typical
	- MCS=6, NSS1 PER @ -73 dBm, typical
	- MCS=7, NSS1 PER @ -70 dBm, typical
	- MCS=8, NSS1 PER @ -68 dBm, typical
Receive Sensitivity (11ac, 40MHz) @10% PER	- MCS=0, NSS1 PER @ -89 dBm, typical
	- MCS=1, NSS1 PER @ -86 dBm, typical
	- MCS=2, NSS1 PER @ -83 dBm, typical
	- MCS=3, NSS1 PER @ -80 dBm, typical
	- MCS=4, NSS1 PER @ -77 dBm, typical
	- MCS=5, NSS1 PER @ -74 dBm, typical
	- MCS=6, NSS1 PER @ -71 dBm, typical
	- MCS=7, NSS1 PER @ -68 dBm, typical
	- MCS=8, NSS1 PER @ -65 dBm, typical
	- MCS=9, NSS1 PER @ -63 dBm, typical
Receive Sensitivity (11ac, 80MHz) @10% PER	- MCS=0, NSS1 PER @ -82 dBm, typical
	- MCS=1, NSS1 PER @ -79 dBm, typical
	- MCS=2, NSS1 PER @ -77 dBm, typical
	- MCS=3, NSS1 PER @ -73 dBm, typical
	- MCS=4, NSS1 PER @ -70 dBm, typical
	- MCS=5, NSS1 PER @ -67 dBm, typical
	- MCS=6, NSS1 PER @ -65 dBm, typical
	- MCS=7, NSS1 PER @ -63 dBm, typical
	- MCS=8, NSS1 PER @ -59 dBm, typical
	- MCS=9, NSS1 PER @ -55 dBm, typical
Receive Sensitivity (11ax, 20MHz) @10% PER	- HE=0 PER @ -89 dBm, typical
	- HE=1 PER @ -86 dBm, typical
	- HE=2 PER @ -83 dBm, typical
	- HE=3 PER @ -80 dBm, typical
	- HE=4 PER @ -77 dBm, typical
	- HE=5 PER @ -74 dBm, typical

	- HE=6 PER @ -71 dBm, typical
	- HE=7 PER @ -68 dBm, typical
	- HE=8 PER @ -65 dBm, typical
	- HE=9 PER @ -63 dBm, typical
Receive Sensitivity (11ax, 40MHz) @10% PER	- HE=0 PER @ -87 dBm, typical
	- HE=1 PER @ -84 dBm, typical
	- HE=2 PER @ -81 dBm, typical
	- HE=3 PER @ -78 dBm, typical
	- HE=4 PER @ -75 dBm, typical
	- HE=5 PER @ -72 dBm, typical
	- HE=6 PER @ -69 dBm, typical
	- HE=7 PER @ -66 dBm, typical
	- HE=8 PER @ -63 dBm, typical
	- HE=9 PER @ -61 dBm, typical
Receive Sensitivity (11ax, 80MHz) @10% PER	- HE=0 PER @ -86 dBm, typical
	- HE=1 PER @ -84 dBm, typical
	- HE=2 PER @ -81 dBm, typical
	- HE=3 PER @ -78 dBm, typical
	- HE=4 PER @ -75 dBm, typical
	- HE=5 PER @ -71 dBm, typical
	- HE=6 PER @ -65 dBm, typical
	- HE=7 PER @ -64 dBm, typical
	- HE=8 PER @ -62 dBm, typical
	- HE=9 PER @ -60 dBm, typical
Maximum Input Level	802.11a/n/ac/ax : 0 dBm
Antenna Reference	Small antennas with 0~2 dBi peak gain

5.3 Bluetooth Section

Feature	Description
General Specification	
Bluetooth Standard	Bluetooth V5.4 of 1, 2 and 3 Mbps.
Host Interface	UART

Antenna Reference	Small antennas with 0~2 dBi peak gain
Frequency Band	2402 MHz ~ 2480 MHz
Number of Channels	BR/EDR :79 channels;BLE:40 channels
Modulation	FHSS, GFSK, DPSK, DQPSK
RF Specification	
Output Power, tolerance±2dBm	
BDR Output Power	8 dBm
EDR Output Power	8 dBm
BLE Output Power	8dBm
Sensitivity, tolerance±2dBm	
Sensitivity @ BER=0.1% for GFSK(1Mbps)	-94 dBm
Sensitivity @ BER=0.01% for π/4-DQPSK(2Mbps)	-92 dBm
Sensitivity @ BER=0.01% for 8DPSK(3Mbps)	-87 dBm
Sensitivity @ BLE=30.8% for LE(1Mbps)	-97 dBm
Sensitivity @ BLE=30.8% for LE(2Mbps)	-92 dBm
Maximum Input Level	GFSK(1Mbps): 0 dBm
	π/4-DQPSK(2Mbps): 0 dBm
	8DPSK(3Mbps): 0 dBm

6. Recommended Operating Rating

Symbol	Parameter	Minimum	Typical	Maximum	Units
VDD	3.3V supply voltage	3.0	3.3	3.6	V

VDDIO	I/O supply voltage	1.7	1.8	1.9	V
Current	3.3V rating current	--	--	600	mA

7. Physical Dimensions

(Unit: mm)

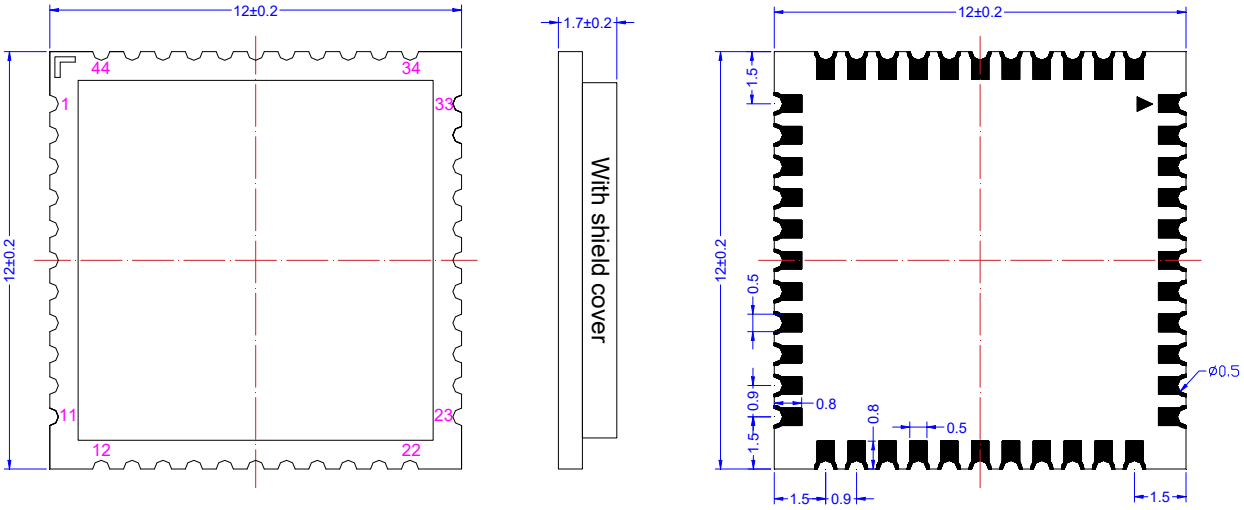

8. Pin Description

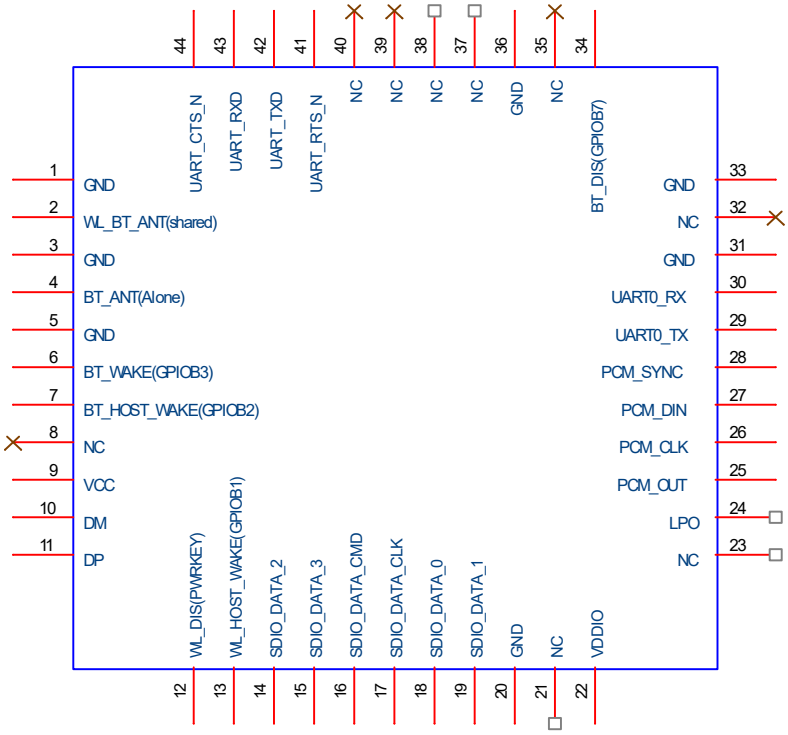

NO.	Name	Type	Description
1	GND	—	Ground connections
2	RF	I/O	WL_BT RF I/O port (2.4/5GHz)
3	GND	—	Ground connections
4	RF	—	2-ANT is BT RF I/O port, 1-ANT keep floating
5	GND	—	Ground connections
6	Host wake BT	I	Host wake BT(GPIOB3)
7	BT wake host	O	BT wake host (GPIOB2)
8	NC	—	No connect, keep floating
9	VDD	P	3.3V INPUT
10	USB_DM	—	No connect, keep floating
11	USB_DP	—	No connect, keep floating
12	WL_DIS	I	Power key (L=OFF, H=ON)
13	WL_Wake-up host	O	WL Wake-up host (GPIOB1)

14	SD_DAT2	I/O	SDIO DATA2
15	SD_DAT3	I/O	SDIO DATA3
16	SD_CMD	I/O	SDIO command line
17	SD_CLK	I/O	SDIO CLK
18	SD_DAT0	I/O	SDIO DATA0
19	SD_DAT1	I/O	SDIO DATA1
20	GND	—	Ground connections
21	NC	—	No connect, keep floating
22	VDDIO	P	I/O Voltage supply input 1.8V or 3.3V（默认IO电压1.8V）
23	NC	—	No connect, keep floating
24	LPO	—	No connect, keep floating
25	PCM OUT	O	PCM data output
26	PCM CLK	I/O	PCM CLK
27	PCM DIN	I	PCM data input
28	PCM SYNC	I	PCM sync signal
29	UART0_TX	—	No connect, keep floating(Debug pin)
30	UART0_RX	—	No connect, keep floating(Debug pin)
31	GND	—	Ground connections
32	NC	—	No connect, keep floating
33	GND	—	Ground connections
34	BT_DIS	—	Reserved (GPIOB7)
35	NC	—	No connect, keep floating
36	GND	—	Ground connections
37	NC	—	No connect, keep floating
38	NC	—	No connect, keep floating
39	NC	—	No connect, keep floating
40	NC	—	No connect, keep floating
41	UART_RTS	O	Bluetooth UART interface
42	UART_TX	O	Bluetooth UART interface
43	UART_RX	I	Bluetooth UART interface
44	UART_CTS	I	Bluetooth UART interface

9. Supplier

Supplier list	
Name of material	Material brand
Crystal	JWT/FK/TKD/Murata/TXC
Duplexer	ACX/GLEAD/Sunlord/Walsin
Inductor	Sunlord/ CHILISIN/ SAMWHA/Murata
IC	AIC
Capacitance	SAMSUNG /EYANG
Resistance	UniOhm /YAGEO
PCB(12x12x0.5mm)	A,O,I,F
Name of material	Material brand
Crystal	JWT/FK/TKD/Murata/TXC

10. Physical Photo

AW869C

11. Layout Recommendation

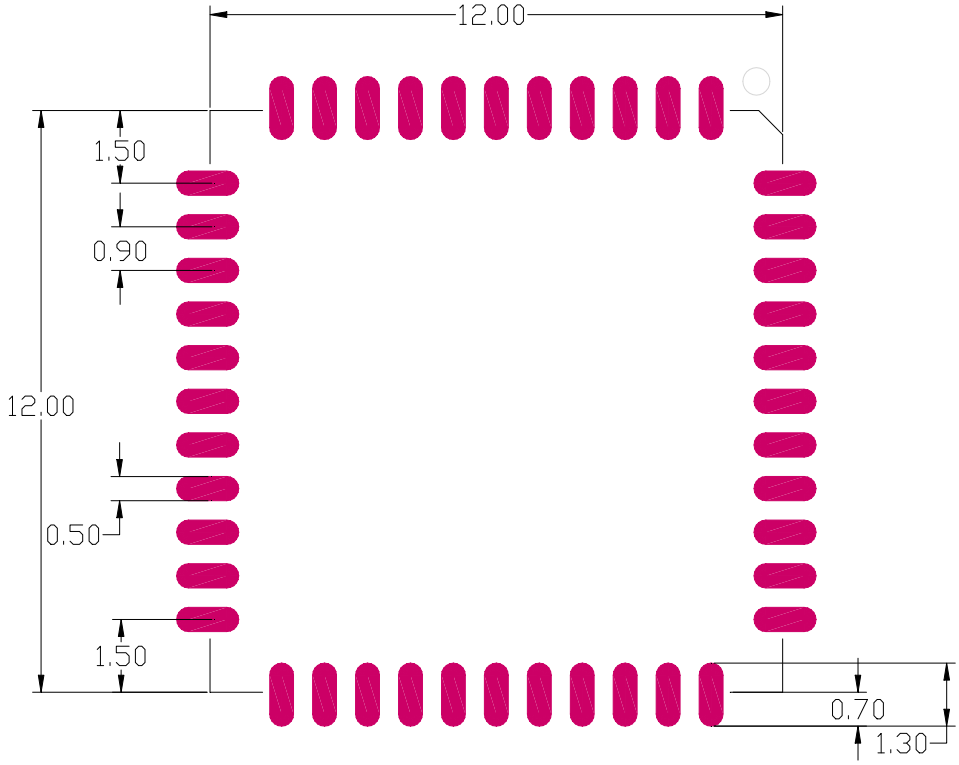

(Top view)

12. Baking & Storage Temperature & Recommended Reflow Profile

（烘烤，储存温度和推荐炉温）

12.1 Baking & Storage Temperature

- Storage life: 12 months. Storage conditions:<40°C. Relative humidity:<90%R.H.

  (保存期限：12个月，储存环境条件：温度在：<40°C，相对湿度：<90%R.H.)

- After this bag is opened , devices that will be subjected to infrared reflow, vapor-phase reflow, or equivalent processing must be .(模块包装被拆后，SMT 组装之时限)

  - ✓ Check the humidity card :stored at ≦20%RH.If :30%~40%(pink)or greater than 40%(red).Labeling module has moisture absorption.(检查湿度卡：显示值应小于30%（蓝色），如：30%~40%(粉红色）或 者大于40%（红色）表示模块已吸湿气.)
  - ✓ Mounted within 168 hours at factory conditions of: t≦30%°C，≦60%R.H.

    (工厂环境温度湿度管制：≦30%°C，≦60%R.H, 168小时内。)
  - ✓ Once opened, the workshop the preservation of life for168 hours.

    (拆封后，车间的保存寿命为168小时.)

- Module apart packing after 168 hours, If baking is required, devices may be baked for.

  (如在拆封后的168个小时内未使用完，需要烘烤，烘烤条件如下：)

  - ✓ Modules must be to remove module moisture problem. (模块须重新烘烤，以除去模块吸湿问题.)
  - ✓ Baking temperature: 40°C±5°C, 120 hours. (烘烤温度条件：40°C±5°C，120小时).
  - ✓ After baking, put proper amount of desiccant to seal packages.

    (烘烤后，放入适量的干燥剂再密封包装)

12.2 Recommended Reflow Profile

Referred IPC/JEDEC standard.

Peak Temperature : <250°C

Number of Times : 2 times

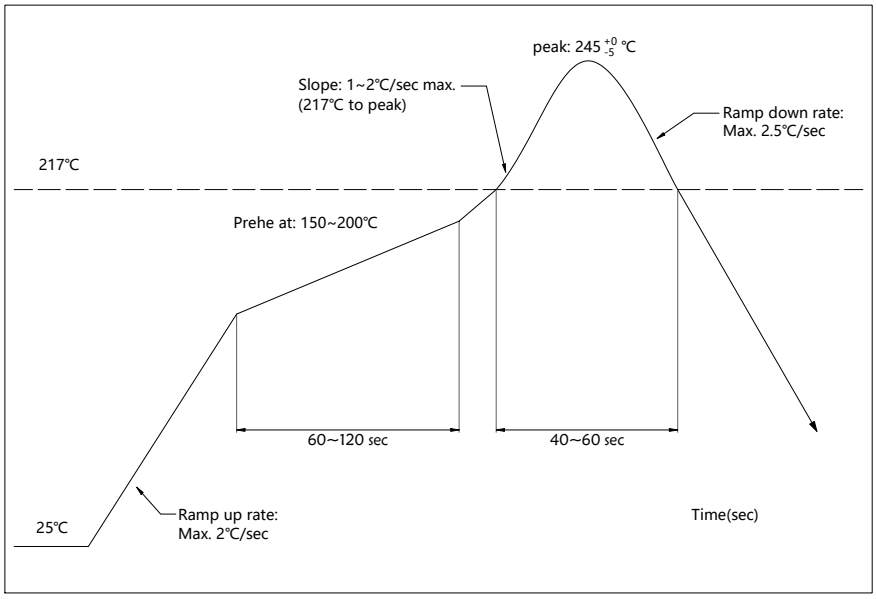

13. Packing information

13.1 Carrier Size Detail

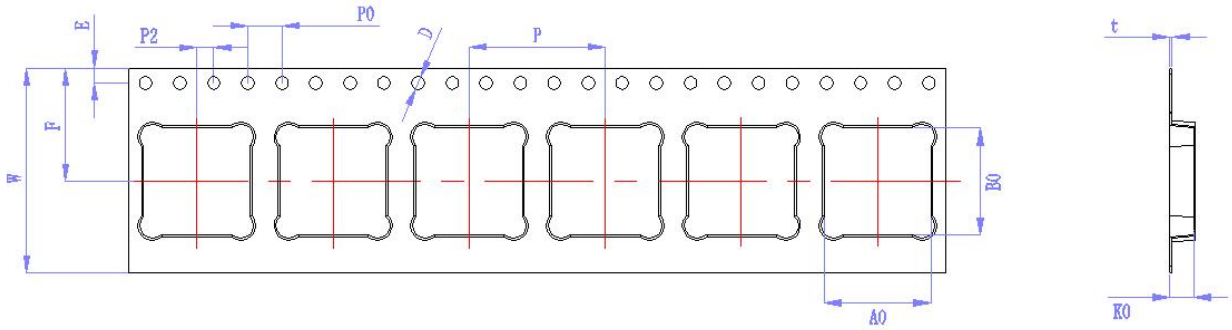

ITEM	W	A0	B0	K0	P	F	E	D	P0	P2	T
DIM	24	12.5	12.5	2.8	16	13.25	1.75	1.50	4	2	0.3
TOLE	+0.30 / -0.30	+0.10 / -0.10	+0.10 / -0.10	+0.10 / -0.10	+0.10 / -0.10	+0.10 / -0.10	+0.10 / -0.10	+0.10 / -0.10	+0.10 / -0.10	+0.10 / -0.10	+0.05 / -0.05

13.2 Packaging Detail

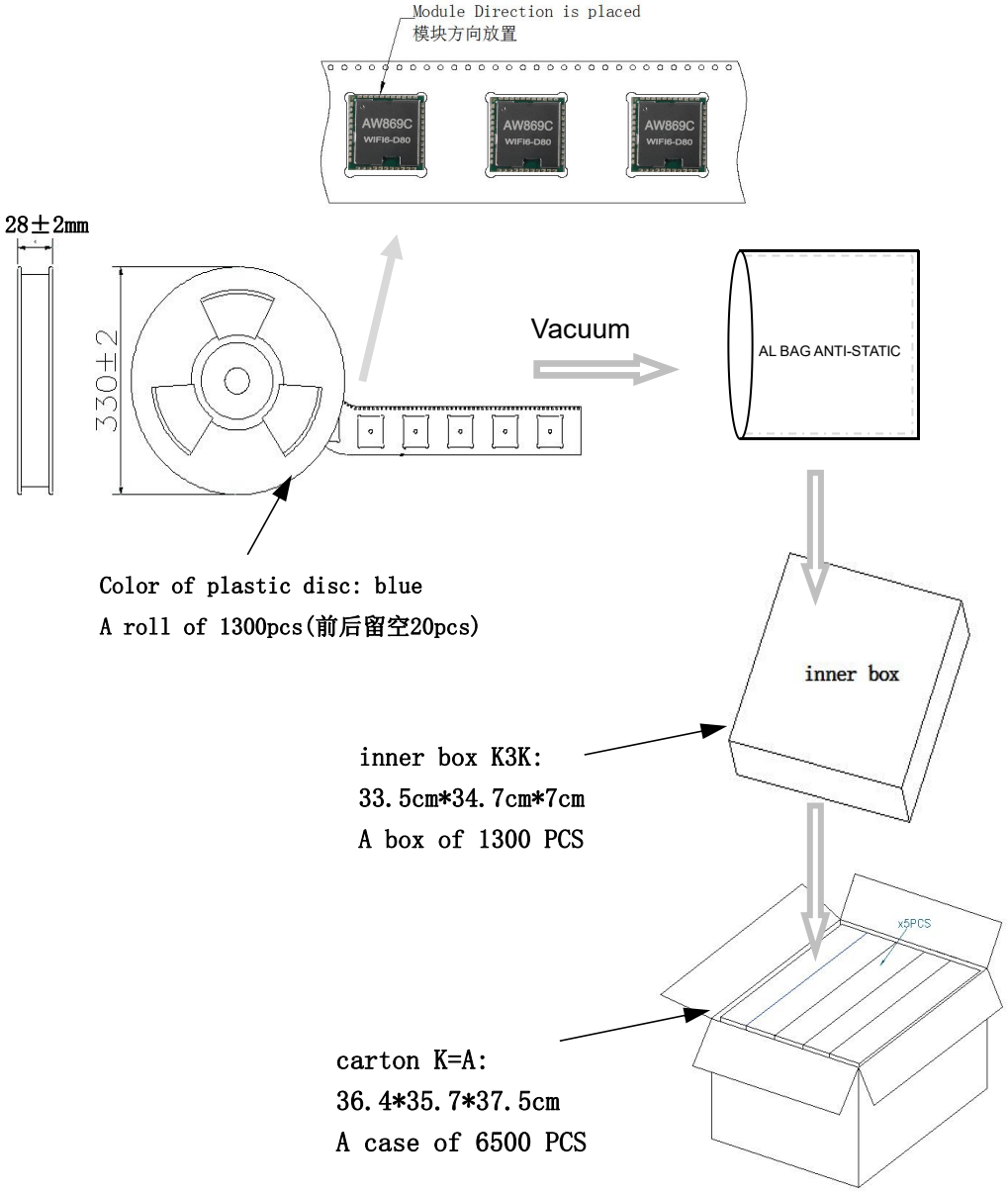

ESD CAUTION

The AW869C module is ESD (electrostatic discharge) sensitive device and may be damaged with ESD or spike voltage. Although AW869C module is with built-in ESD protection circuitry, please handle with care to avoid the permanent malfunction or the performance degradation.

FCC Statement

This device complies with part 15 of the FCC Rules. Operation is subject to the following two conditions:
(1) This device may not cause harmful interference, and
(2) this device must accept any interference received, including interference that may cause undesired operation.
This equipment has been tested and found to comply with the limits for a Class B digital device, pursuant to part 15 of the FCC Rules. These limits are designed to provide reasonable protection against harmful interference in a residential installation. This equipment generates, uses and can radiate radio frequency energy and, if not installed and used in
accordance with the instructions, may cause harmful interference to radio communications. However, there is no guarantee that interference will not occur in a particular installation. If this equipment does cause harmful interference to radio or television reception, which can be determined by turning the equipment off and on, the user is
encouraged to try to correct the interference by one or more of the following measures:
- Reorient or relocate the receiving antenna.
- Increase the separation between the equipment and receiver.
- Connect the equipment into an outlet on a circuit different from that to which the receiver is connected.
- Consult the dealer or an experienced radio/TV technician for help.

This modular has been tested and found to comply with part 15 requirements for Modular Approval.

FCC Caution: Any changes or modifications not expressly approved by the party responsible for compliance could void the user's authority to operate the equipment. This transmitter must not be co-located or operating in conjunction with any other antenna or transmitter.

Integration instructions for host product manufacturers according to KDB 996369 D03 OEM Manual v01r01

2.2 List of applicable FCC rules

CFR 47 FCC Part 15 Subpart C and Subpart F has been investigated. It is applicable to the modular transmitter

2.3 Specific Operational Use Conditions - Antenna Placement Within the Host Platform

The module is tested for standalone mobile RF exposure use condition.
● The antenna must be installed such that 20cm is maintained between the antenna and users,
● The transmitter module may not be co-located with any other transmitter or antenna.
In the event that these conditions cannot be met (for example certain laptop configurations or co-location with another transmitter), then the FCC authorization is no longer considered valid and the FCC ID cannot be used on the
final product. In these circumstances, the OEM integrator will be responsible for re-evaluating the end product (including the transmitter) and obtaining a separate FCC authorization.

2.4 Limited Module Procedures

Not applicable

2.5 Trace Antenna Designs

External antenna
Below is External antenna specification
You can see antenna size is 69(L)mm*8(W)mm*8(T)mmmm From below specification.

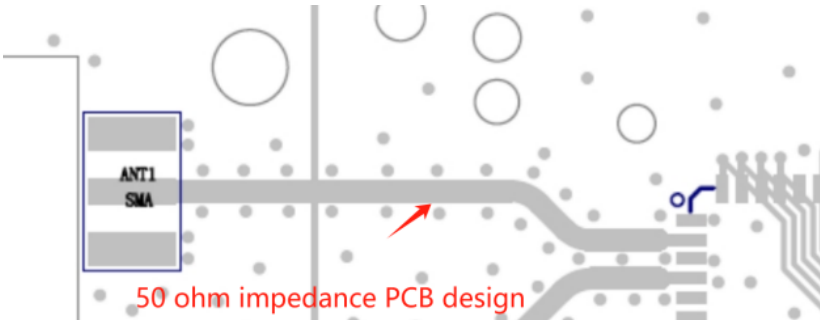

Note:In the PCB layout design part of the antenna, the impedance of the design needs to be strictly modified at 50 ohms. The standard external dual-frequency antenna can be connected through ANT1 SMA , so that the spatial transmission efficiency of the antenna is higher.

Copyright© Allwinner Technology Co.,Ltd. All Rights Reserved.

2.6 RF Exposure Considerations

This device complies with FCC radiation exposure limits set forth for an uncontrolled environment. This equipment should be installed and operated with minimum distance 20cm between the radiator & your body.

2.7 Antenna Type and Gain

The following antennas have been certified for use with this module.
Only antennas of the same type with equal or lower gain may also be used with this module.
Other types of antennas and/or higher gain antennas may require the additional authorization for operation.
Antenna Specification list below:

Antenna Type	Antenna Model No.	Maximum Antenna Gain (dBi)	Frequency Range
External antenna	B70L	1.78	2400 – 5850 MHz

2.8 End Product Labelling Compliance Information

When the module is installed in the host device, the FCC ID label must be visible through a window on the final device or it must be visible when an access panel, door or cover is easily removed. If not, a second label must be placed on the outside of the final device that contains the following text: “ Contains **FCC ID:2BNUT-AW869C** ” .
The FCC ID can be used only when all FCC compliance requirements are met.

2.9 Information on Test Modes and Additional Testing Requirements

This transmitter is tested in a standalone mobile RF exposure condition and any co-located or simultaneous transmission
with other transmitter(s) class II permissive change re-evaluation or new FCC authorization.
Host manufacturer installed this modular with single modular approval should perform the test of radiated emission and
spurious emission according to FCC part 15C, 15.209, 15.207 requirement, only if the test result comply with FCC part 15C, 15.209, 15.207 requirement, then the host can be sold legally.

2.10 Additional testing, Part 15 Subpart B Disclaimer

This transmitter modular us tested as a subsystem and its certification does not cover the FCC Part 15 Subpart B rules requirement applicable to the final host. The final host will still need to be reassessed for compliance to this portion of rules requirements if applicable.
As long as all conditions above are met, further transmitter test will not be required. However, the OEM integrator is still responsible for testing their end-product for any additional compliance requirements required with this modular installed.

2.11 Manual Information to The End User

The OEM integrator has to be aware not to provide information to the end user regarding how to install or remove this RF module in the user ’ s manual of the end product which integrates this module.
The host integrator must follow the integration instructions provided in this document and ensure that the composite system end product complies with the requirements by a technical assessment or evaluation to the rules and to KDB Publication 996369.
The host integrator installing this module into their product must ensure that the final composite product complies with the requirements by a technical assessment or evaluation to the rules, including the transmitter operation and should refer to guidance in KDB Publication 996369.

OEM/Host Manufacturer Responsibilities

OEM/Host manufacturers are ultimately responsible for the compliance of the Host and Module. The final product must be reassessed against all the essential requirements of the FCC rule such as FCC Part 15 Subpart B before it can be placed on the US market. This includes reassessing the transmitter module for compliance with the Radio and RF Exposure essential requirements of the FCC rules.

2.12 How to Make Changes - Important Note

In the event that these conditions cannot be met (for example certain laptop configurations or co-location with another transmitter), then the FCC authorization is no longer considered valid and the FCC ID cannot be used on the final product. In these circumstances, the OEM integrator will be responsible for re-evaluating the end product (including the transmitter) and obtaining a separate FCC authorization.

Copyright© Allwinner Technology Co.,Ltd. All Rights Reserved.