intertek
Total Quality. Assured.

Exhale Fans LLC

TEST REPORT

Model:
EF-34-64

REPORT NUMBER
250300201THC-001

ISSUE DATE
Jun. 13, 2025

PAGES
18

DOCUMENT CONTROL NUMBER
GFT-OP-10h (28-Nov-2018)
© 2020 Intertek

Radio Spectrum
TEST REPORT

Applicant:	**Exhale Fans LLC** **6370 Forest Grove Drive NE Georgetown, IN 47122 United States**
Product:	**Remote Controller**
Model No.:	**EF-34-64**
FCC ID:	**2BNXXV5RCUHH**
Test Method/ Standard:	**47 CFR FCC Part 15.231**
Test By:	**Intertek Testing Services Taiwan Ltd.,** **Hsinchu Laboratory** **No. 17, Ln. 246, Niupu S. Rd., Xiangshan Dist,** **Hsinchu City 300075, Taiwan**

Testing Laboratory
0597

Rich Nien
Engineer

Zero Chen
Reviewer

This report is for the exclusive use of Intertek's Client and is provided pursuant to the agreement between Intertek and its Client. Intertek's responsibility and liability are limited to the terms and conditions of the agreement. Intertek assumes no liability to any party, other than to the Client in accordance with the agreement, for any loss, expense or damage occasioned by the use of this report. Only the Client is authorized to permit copying or distribution of this report and then only in its entirety. Any use of the Intertek name or one of its marks for the sale or advertisement of the tested material, product or service must first be approved in writing by Intertek. The observations and test results in this report are relevant only to the sample tested. This report by itself does not imply that the material, product, or service is or has ever been under an Intertek certification program.

Revision History

Report No.	Issue Date	Revision Summary
250300201THC-001	Jun. 13, 2025	Original report

Table of Contents

Summary of Test Data 4

1. General Information 5
   1.1 Identification of the EUT 5
   1.2 Antenna description 5
   1.3 Operation mode 6
   1.4 Peripherals equipment 6

2. Radiated emission test FCC 15.231 (b) 7
   2.1 Test setup & procedure 7
   2.1.1 Radiated emission from 9kHz to 30MHz uses Loop Antenna: 7
   2.1.2 Radiated emission below 1GHz using Bilog Antenna 8
   2.1.3 Radiated emission above 1GHz using Horn Antenna 8

3. Measured bandwidth FCC 15.231(C) 14

4. Timing requirement of operated transmitter 15

5. Conducted emission FCC 15.207 16

Appendix A: Test equipment list 17

Appendix B: Measurement Uncertainty 18

Summary of Test Data

Test Requirement	Applicable Rule	Result
Radiated Emission test	15.231(b), 15.209	Pass
Measured bandwidth	15.231(c)	Pass
Timing requirement of operated transmitter	15.231(b)	Pass
Conducted Emission test	15.207	N/A
Antenna Requirement	15.203	Pass

Note: Please note that the test results with statement of conformity, the decision rules which are based on: Safety Testing: the specification, standard or IEC Guide 115.
Other Testing: the specification, standard and not taking into account the measurement uncertainty.

1. General Information

1.1 Identification of the EUT

Product:	Remote control
Model No.:	EF-34-64
Operating Frequency:	433.92MHz
Rating:	DC 3V
Power Cord:	N/A
Sample receiving date:	2025/04/24
Sample condition:	Workable
Test Date(s):	2025/05/14 ~ 2025/05/15

1.2 Antenna description

Antenna Type : PCB Antenna
Connector Type : Fixed

1.3 Operation mode

The EUT was supplied with DC 3V from battery and press EUT button to transmit.

The signal is maximized through rotation and placement in the three orthogonal axes.

X axis

Y axis

Z axis

After verifying three axes, we found the maximum electromagnetic field was occurred at X axis. The final test data was executed under this configuration.

Frequency (MHz)	Signal on time(ms)	Signal on & off time(ms)	Duty Cycle	Duty Cycle factor
433.92	57.31	100.00	0.57	4.84

1.4 Peripherals equipment

Peripherals	Brand	Model No.	Serial No.	Data cable
Battery	Maxell	CR2032	N/A	N/A

2. Radiated emission test FCC 15.231 (b)

2.1 Test setup & procedure

2.1.1 Radiated emission from 9kHz to 30MHz uses Loop Antenna:

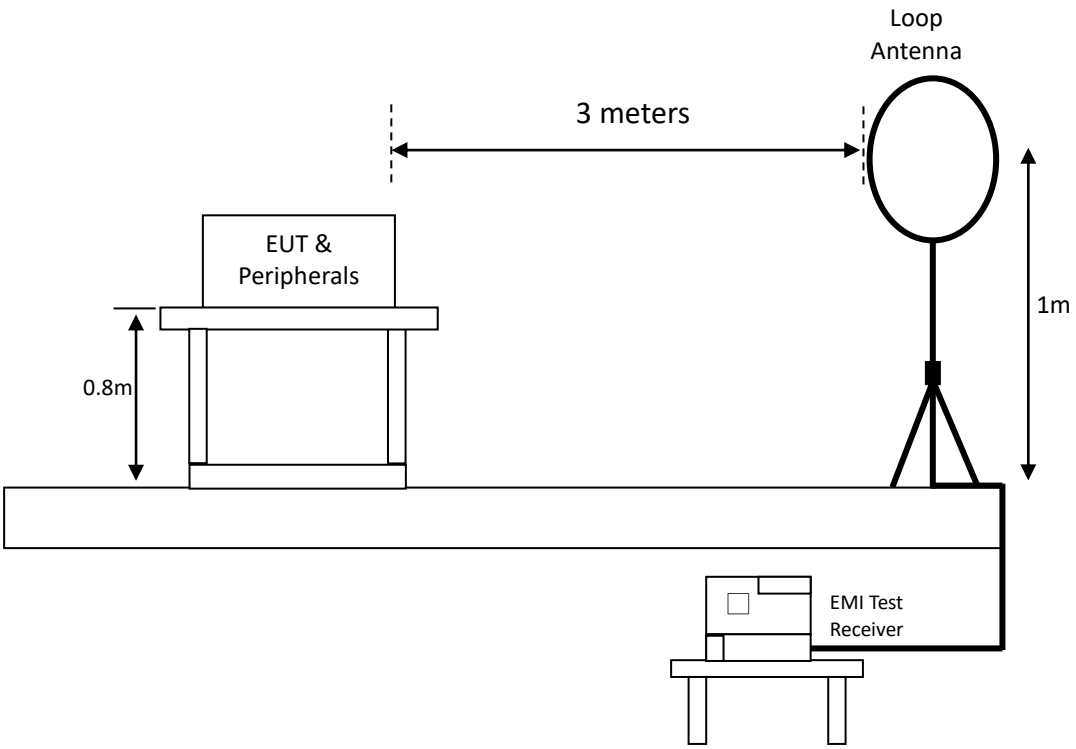

2.1.2 Radiated emission below 1GHz using Bilog Antenna

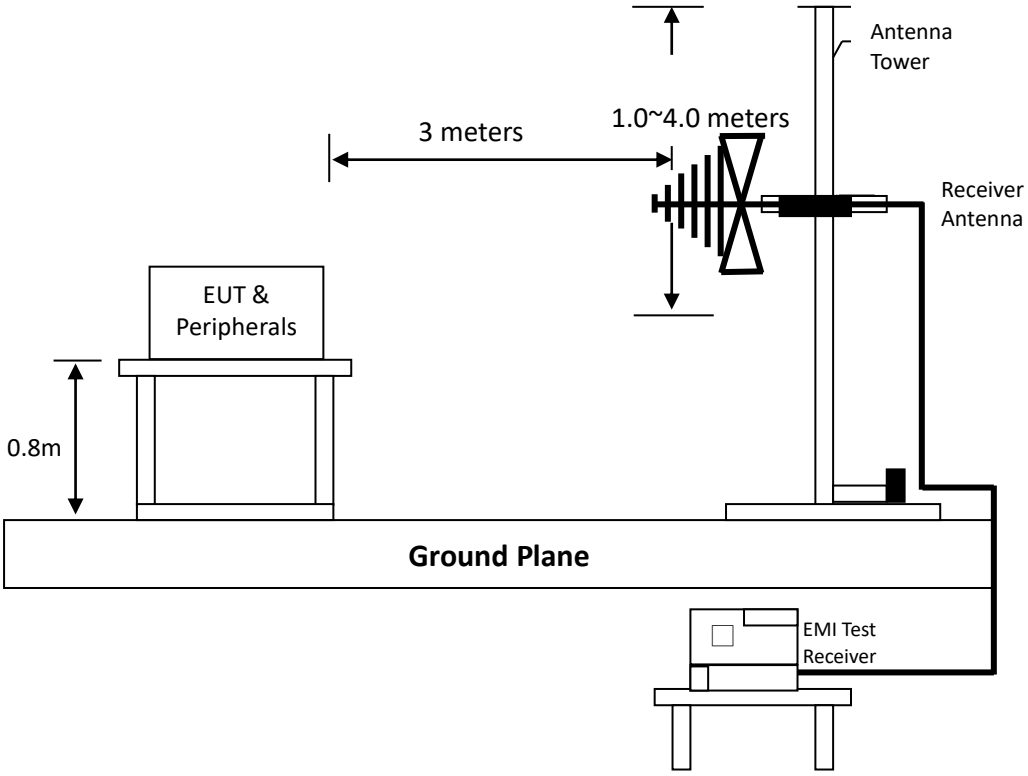

2.1.3 Radiated emission above 1GHz using Horn Antenna

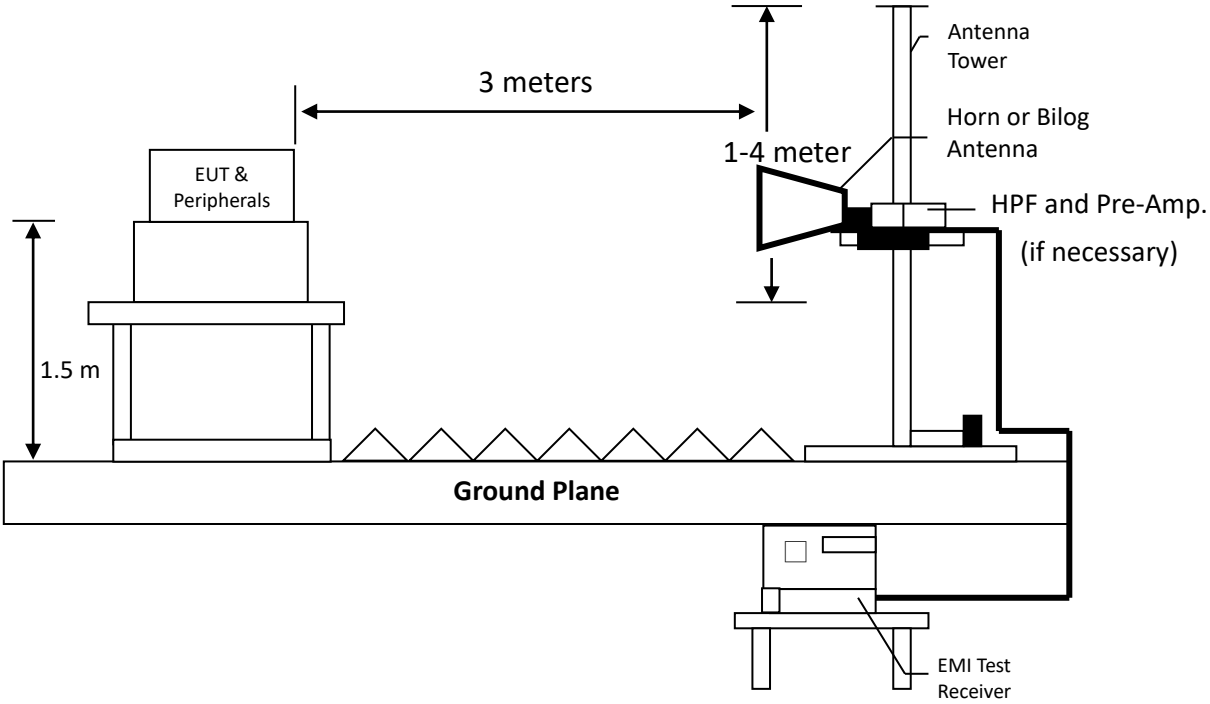

2.2 Radiated emission limit

2.2.1 Fundamental and harmonics emission limits

Frequency (MHz)	Field Strength of Fundamental		Field Strength of Harmonics	
	(uV/m@3 m)	(dBuV/m@3 m)	(uV/m@3 m)	(dBuV/m@3 m)
433.99	10999.6	80.82	1099.9	60.82

2.2.2 General radiated emission limit

The spurious Emission shall test through the 10th harmonic. In addition, radiated emissions which fall in the restricted bands, as defined in §15.205(a), must also comply with the radiated emission limits specified in §15.209(a).

Frequency MHz	15.209 Limits (dBµV/m@3m)
30-88	40
88-216	43.5
216-960	46
Above 960	54

Remark:
1. In the above table, the tighter limit applies at the band edges.
2. Distance refers to the distance in meters between the measuring instrument antenna and the closed point of any part of the device or system

2.3 Radiated emission test data FCC 15.231

2.3.1 Measurement results: Fundamental emission

Temperature: 21 ℃
Relative Humidity: 77 %
Test date: 2025/05/14

Frequency (MHz)	Spectrum Analyzer Detector	Antenna Polarization	Correction Factor (dB/m)	Reading (dBµV)	Corrected Reading (dBµV/m)	Limit @ 3 m (dBµV/m)	Margin (dB)
433.92	PK	H	24.68	58.21	82.89	100.83	-17.94
433.92	AV	H	-	-	78.05	80.83	-2.78
433.92	PK	V	24.68	49.16	73.84	100.83	-26.99
433.92	AV	V	-	-	69.00	80.83	-11.83

Remark: 1. Correction Factor = Antenna Factor + Cable Loss
2. AV Corrected Reading = PK Corrected Reading +Duty cycle correction factor (-4.84)

2.3.2 Measurement results: frequencies equal to or less than 1 GHz

Temperature: 25 ℃
Relative Humidity: 77 %
Test date: 2025/05/15

9kHz – 30MHz

Antenna Polarization	Frequency (MHz)	Detector	Correction Factor (dB/m)	Reading (dBµV)	Corrected Reading (dBµV/m)	Limit @ 3 m (dBµV/m)	Margin (dB)
Perpendicular	0.55	PK	17.35	17.31	34.66	72.81	-38.15
Perpendicular	1.24	PK	17.38	13.59	30.97	65.74	-34.77
Perpendicular	2.23	PK	17.35	10.84	28.19	69.54	-41.35
Perpendicular	6.25	PK	19.32	9.76	29.08	69.54	-40.46
Perpendicular	7.66	PK	19.28	9.89	29.17	69.54	-40.37
Perpendicular	17.37	PK	20.56	8.51	29.07	69.54	-40.47

Remark: Corr. Factor = Antenna Factor + Cable Loss

Antenna Polarization	Frequency (MHz)	Detector	Correction Factor (dB/m)	Reading (dBµV)	Corrected Reading (dBµV/m)	Limit @ 3 m (dBµV/m)	Margin (dB)
Parallel	0.55	PK	17.35	16.94	34.29	72.81	-38.52
Parallel	1.42	PK	17.36	12.52	29.88	64.56	-34.68
Parallel	2.47	PK	17.39	11.67	29.06	69.54	-40.48
Parallel	7.12	PK	19.33	10.13	29.46	69.54	-40.08
Parallel	8.44	PK	19.27	9.18	28.45	69.54	-41.09
Parallel	20.58	PK	20.81	8.53	29.34	69.54	-40.20

Remark: Corr. Factor = Antenna Factor + Cable Loss

Antenna Polarization	Frequency (MHz)	Detector	Correction Factor (dB/m)	Reading (dBµV)	Corrected Reading (dBµV/m)	Limit @ 3 m (dBµV/m)	Margin (dB)
Ground-parallel	0.67	PK	17.40	15.95	33.35	71.10	-37.75
Ground-parallel	1.72	PK	17.33	11.95	29.28	69.54	-40.26
Ground-parallel	5.11	PK	18.32	10.10	28.42	69.54	-41.12
Ground-parallel	8.89	PK	19.28	9.47	28.75	69.54	-40.79
Ground-parallel	16.98	PK	20.49	8.92	29.41	69.54	-40.13
Ground-parallel	19.35	PK	20.92	7.86	28.78	69.54	-40.76

Remark: Corr. Factor = Antenna Factor + Cable Loss

Temperature: 21 ℃
Relative Humidity: 77 %
Test date: 2025/05/14

30MHz – 1GHz

Antenna Polarization	Frequency (MHz)	Spectrum Analyzer Detector	Correction Factor (dB/m)	Reading (dBµV)	Corrected Reading (dBµV/m)	Limit @ 3 m (dBµV/m)	Margin (dB)
Horizontal	51.34	PK	20.58	2.57	23.15	80.83	-57.68
Horizontal	172.59	PK	19.79	2.87	22.66	43.50	-20.84
Horizontal	604.24	PK	28.02	3.45	31.47	80.83	-49.36
Horizontal	749.74	PK	30.37	3.37	33.74	80.83	-47.09
Horizontal	867.84	PK	31.54	14.76	46.30	80.83	-34.53
Horizontal	927.25	PK	32.84	3.66	36.50	80.83	-44.33

Remark: Corr. Factor = Antenna Factor + Cable Loss

Antenna Polarization	Frequency (MHz)	Spectrum Analyzer Detector	Correction Factor (dB/m)	Reading (dBµV)	Corrected Reading (dBµV/m)	Limit @ 3 m (dBµV/m)	Margin (dB)
Vertical	76.56	PK	16.69	9.85	26.54	80.83	-54.29
Vertical	149.31	PK	20.20	2.88	23.08	43.50	-20.42
Vertical	652.74	PK	28.71	3.15	31.86	80.83	-48.97
Vertical	808.91	PK	31.06	3.35	34.41	80.83	-46.42
Vertical	867.84	PK	31.54	8.12	39.66	80.83	-41.17
Vertical	937.92	PK	32.81	4.81	37.62	80.83	-43.21

Remark: Corr. Factor = Antenna Factor + Cable Loss

2.3.3 Measurement results: frequency above 1GHz

Temperature: 24 ℃
Relative Humidity: 77 %
Test date: 2025/05/15

Frequency (MHz)	Spectrum Analyzer Detector	Ant. Pol. (H/V)	Correction Factor (dB/m)	Reading (dBµV)	Corrected Reading (dBµV/m)	Limit @ 3 m (dBµV/m)	Margin (dB)
1301.76	PK	H	-23.72	61.97	38.25	74.00	-35.75
1735.68	PK	H	-23.93	60.60	36.67	80.83	-44.16
2169.60	PK	H	-20.60	69.35	48.75	80.83	-32.08
2603.52	PK	H	-20.18	65.03	44.85	80.83	-35.98
3037.44	PK	H	-18.54	63.15	44.61	80.83	-36.22
3905.28	PK	H	-16.06	66.26	50.20	74.00	-23.80
1301.76	PK	V	-23.72	58.28	34.56	74.00	-39.44
1735.68	PK	V	-23.93	64.68	40.75	80.83	-40.08
2169.60	PK	V	-20.60	66.38	45.78	80.83	-35.05
2603.52	PK	V	-20.18	61.42	41.24	80.83	-39.59
3037.44	PK	V	-18.54	60.58	42.04	80.83	-38.79
3905.28	PK	V	-16.06	58.57	42.51	74.00	-31.49

Remark: Correction Factor = Antenna Factor + Cable Loss + High Pass Filter Loss - Pre_Amplifier Gain

3. Measured bandwidth FCC 15.231(C)

Temperature: 24 ℃
Relative Humidity: 63 %
Test date: 2025/05/15

The bandwidth of the emission shall be no wider than 0.25% of the center frequency for devices operating above 70MHz and below 900MHz. Bandwidth is determined at the points 20dB down from the modulated carrier.

Frequency (MHz)	20dB Occupied Bandwidth (MHz)	Limit (MHz)	Result
433.92	0.98	1.08	Pass

20dB Occupied Bandwidth

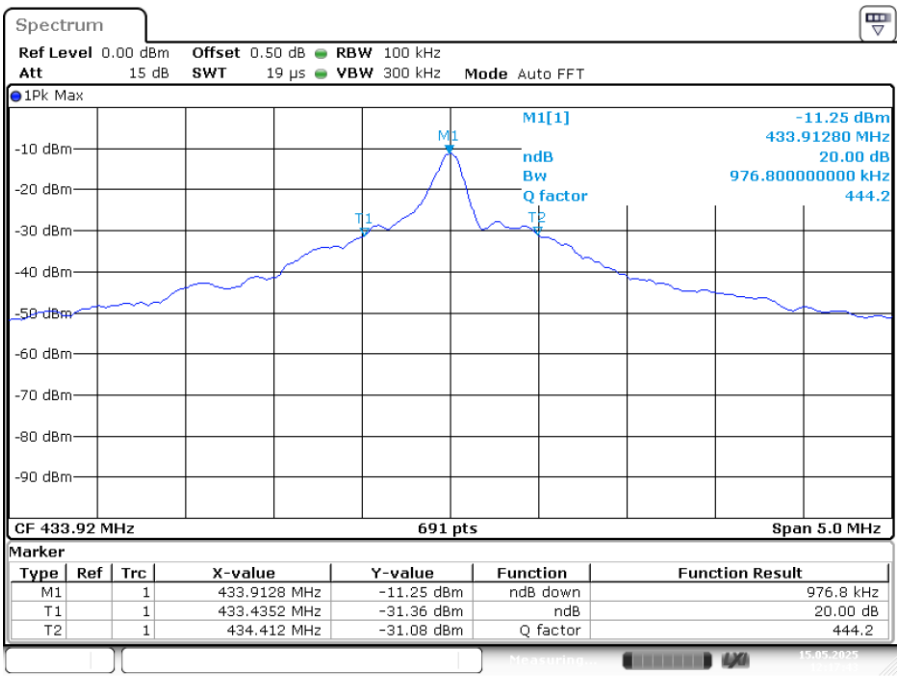

Date: 15.MAY.2025 12:17:43

4. Timing requirement of operated transmitter

Temperature: 24 ℃
Relative Humidity: 63 %
Test date: 2025/05/15

A manually operated transmitter shall employ a switch that will automatically deactivate the transmitter within not more than 5 seconds of being released.

Frequency (MHz)	Transmission Time (s)	Limit (s)	Result
433.92	0.26	< 5	Pass

Transmitter Pulse Duration

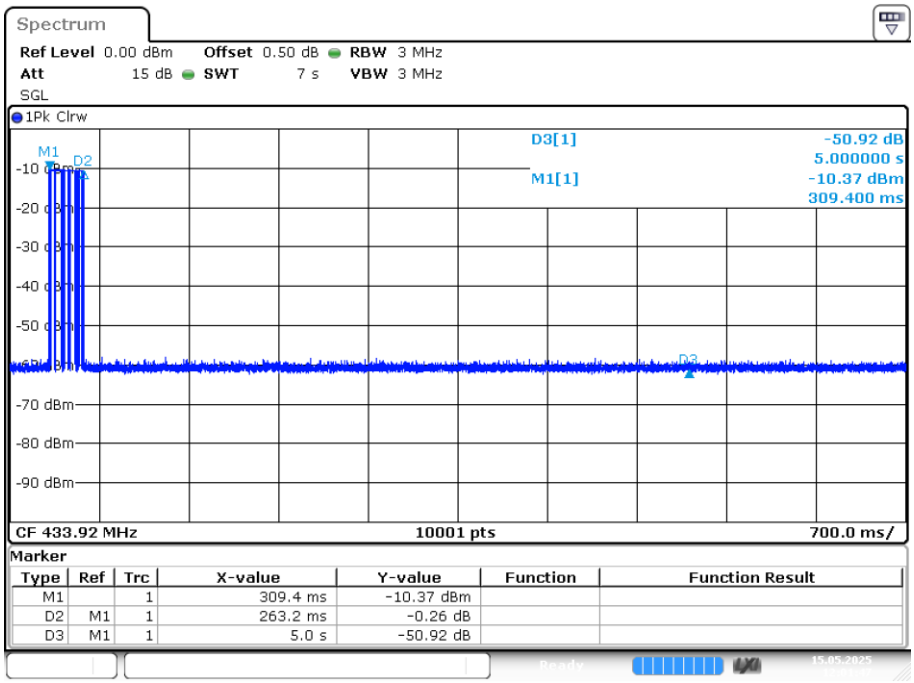

Date: 15.MAY.2025 12:01:47

5. Conducted emission FCC 15.207

Since the EUT is not connected to AC source, therefore, the test can be waived.

Appendix A: Test equipment list

Test Equipment/ Test site	Brand	Model No.	Serial No.	Calibration Date	Next Calibration Date
EMI Test Receiver	KEYSIGHT	N9038B	MY63060107	2025/02/08	2026/02/27
Signal Analyzer	R&S	FSV40	101532	2024/07/12	2025/07/11
Active Loop Antenna	SCHWARZBECK	FMZB1519	1519-067	2024/12/11	2025/12/10
Broadband Antenna	SCHWARZBECK	VULB 9168	9168-172	2024/12/30	2025/12/29
Horn Antenna	SCHWARZBECK	BBHA 9120 D	9120D-456	2024/12/10	2025/12/09
Pre-Amplifier	SGH	SGH118	20220105-1	2025/01/14	2026/01/13
Cable	SUHNER	SUCOFLEX 104	295105/4	2025/02/27	2026/02/26
Cable	SUHNER	SUCOFLEX 104P	CB0005	2025/02/27	2026/02/26
RF Cable	SUHNER	SUCOFLEX 104P	9403 / 4P	2024/11/22	2025/11/21
Power Meter	Anritsu	ML2495A	0844001	2024/12/07	2025/12/06
Power Sensor	Anritsu	MA2491A	031543	2024/12/07	2025/12/06
966-2_3m Semi-Anechoic Chamber	CHANCE MOST	CEM-966_2	N/A	2024/07/30	2025/07/29
Test software	Audix	e3	V9	NCR	NCR

Note: No Calibration Required (NCR).

Appendix B: Measurement Uncertainty

This uncertainty represents an expanded uncertainty expressed at approximately the 95 % confidence level using a coverage factor of *k*=2.

Item	Uncertainty
Radiated disturbances from 9kHz~30MHz in a semi-anechoic chamber at a distance of 3m	2.73 dB
Vertically polarized radiated disturbances from 30MHz~1GHz in a semi-anechoic chamber at a distance of 3m	3.91 dB
Horizontally polarized radiated disturbances from 30MHz~1GHz in a semi-anechoic chamber at a distance of 3m	3.49 dB
Vertically polarized Radiated disturbances from 1GHz~18GHz in a semi-anechoic chamber at a distance of 3m	3.71 dB
Horizontally polarized Radiated disturbances from 1GHz~18GHz in a semi-anechoic chamber at a distance of 3m	3.71 dB
Conducted Measurement	0.69 dB
AC Conducted Emission	1.31 dB