# TREADPAD 100 SMART WALKING TREADMILL

## SF-T724064

## USER MANUAL

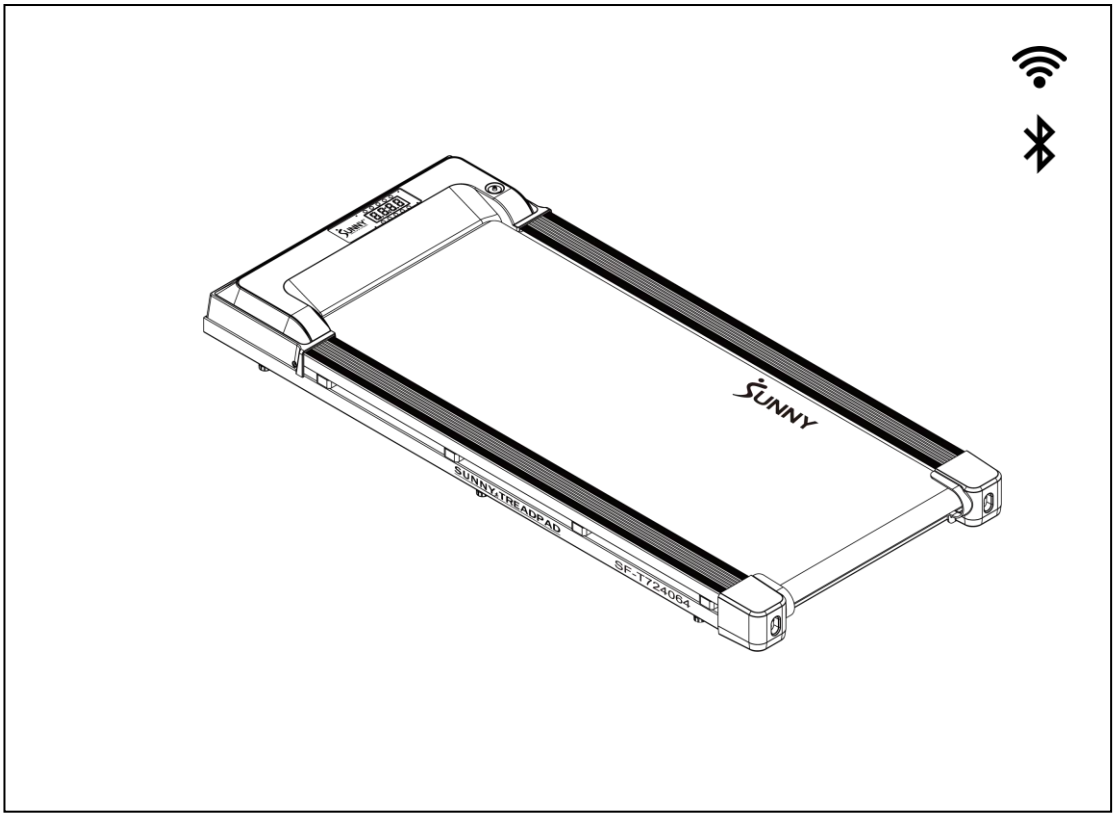


**IMPORTANT!** Please retain owner's manual for maintenance and adjustment instructions. Your satisfaction is very important to us, **PLEASE DO NOT RETURN UNTIL YOU HAVE CONTACTED US**: support@sunnyhealthfitness.com or 1- 877 - 90SUNNY (877-907-8669).

WWW.SUNNYHEALTHFITNESS.COM

# IMPORTANT SAFETY INSTRUCTION

When using an electrical appliance, basic precautions should always be followed, including the following:
Read all instructions before using (this appliance).

DANGER –To reduce the risk of electric shock:
Always unplug this appliance from the electrical outlet immediately after using and before cleaning.

WARNING – To reduce the risk of burns, fire, electric shock, or injury to persons:

1. An appliance should never be left unattended when plugged in. Unplug from outlet when not in use, and before putting on or taking off parts.
2. This appliance is not intended for use by persons with reduced physical, sensory or mental capabilities, or lack of experience and knowledge, unless they have been given supervision or instruction concerning use of the appliance by a person responsible for their safety. Keep children under the age of 13 away from this machine.
3. Use this appliance only for its intended use as described in this manual. Do not use attachments not recommended by the manufacturer.
4. Never operate this appliance if it has a damaged cord or plug, if it is not working properly, if it has been dropped or damaged, or dropped into water. Please contact Customer Service at support@sunnyhealthfitness.com.
5. Do not carry this appliance by supply cord or use cord as a handle.
6. Keep the cord away from heated surfaces.
7. Never operate the appliance with the air openings blocked. Keep the air openings free of lint, hair, and the like.
8. Never drop or insert any object into any opening.
9. Do not use outdoors. Household use only.
10. Do not operate where aerosol (spray) products are being used or where oxygen is being administered.
11. To disconnect, turn all controls to the off position, then remove plug from outlet.
12. CAUTION: Risk of Injury to Persons – To Avoid Injury, use extreme caution when stepping onto or off of a moving belt. Read Instruction Manual Before Using.
13. Connect this appliance to a properly grounded outlet only. See Grounding Instructions.
14. REMOVE CONTROL BOX (OR KEY, OR SAFETY PIN, AS APPLICABLE) WHEN NOT IN USE, AND STORE OUT OF REACH OF CHILDREN.

SAVE THESE INSTRUCTIONS

**CAUTION:**
Caution: The user is cautioned that changes or modifications not expressly approved by the party responsible for compliance could void the user's authority to operate the equipment.

This device complies with Part 15 of the FCC Rules and Industry Canada licence-exempt RSS standard(s). Operation is subject to the following two conditions: (1) this device may not cause harmful interference, and ( 2) this device must accept any interference received, including interference that may cause undesired operation.

Le présent appareil est conforme aux CNR d'Industrie Canada applicables aux appareils radio exempts de licence. L'exploitation est autorisée aux deux conditions suivantes :
(1) l'appareil ne doit pas produire de brouillage, et
(2) l'utilisateur de l'appareil doit accepter tout brouillage radioélectrique subi, même si le brouillage est susceptible d'en compromettre le fonctionnement.

NOTE: This equipment has been tested and found to comply with the limits for a Class B digital device, pursuant to Part 15 of the FCC Rules. These limits are designed to provide reasonable protection against harmful interference in a residential installation. This equipment generates, uses and can radiate radio frequency energy and, if not installed and used in accordance with the instructions, may cause harmful interference to radio communications. However, there is no guarantee that interference will not occur in a particular installation.
If this equipment does cause harmful interference to radio or television reception, which can be determined by turning the equipment off and on, the user is encouraged to try to correct the interference by one or more of the following measures:
-- Reorient or relocate the receiving antenna.
-- Increase the separation between the equipment and receiver.
-- Connect the equipment into an outlet on a circuit different from that to which the receiver is connected.
-- Consult the dealer or an experienced radio/TV technician for help.

**FCC& IC Radiation Exposure Statement:**
This equipment complies with FCC and Canada radiation exposure limits set forth for an uncontrolled environment. ~~This equipment should be installed and operated with a minimum distance of 20cm between the radiator and your body.~~
This transmitter must not be co-located or operating in conjunction with any other antenna or transmitter.
**Déclaration d'IC sur l'exposition aux radiations:**
Cet équipement est conforme aux limites d'exposition aux radiations définies par le Canada pour des environnements non contrôlés. ~~Cet équipement doit être installé et utilisé à une distance minimum de 20 cm entre l'antenne et votre corps.~~
Cet émetteur ne doit pas être installé au même endroit ni utilisé avec une autre antenne ou un autre émetteur.

# IMPORTANT SAFETY INFORMATION

We thank you for choosing our product. To ensure your safety and health, please use this equipment correctly. It is important to read this entire manual before assembling and using the equipment. Safe and effective use can only be achieved if the equipment is assembled, maintained and used properly. It is your responsibility to ensure that all users of the equipment are informed of all warnings and precautions.

1. Before starting any exercise program, you should consult your physician to determine if you have any medical or physical conditions that could put your health and safety at risk or prevent you from using the equipment properly. Your physician's advice is essential if you are taking medication that affects your heart rate, blood pressure, or cholesterol level.
2. Be aware of your body's signals. Incorrect or excessive exercise can damage your health. Stop exercising if you experience any of the following symptoms: pain, tightness in your chest, irregular heartbeat, shortness of breath, lightheadedness, dizziness, or feelings of nausea. If

you do experience any of these conditions, you should consult your physician before continuing with your exercise program.

3. Keep children and pets away from the equipment.
4. Use the equipment on a solid, flat level surface with a protective cover for your floor or carpet. To ensure safety, the equipment should have at least 8 feet (240 cm) of free space behind it and 2 feet (60 cm) on each side. Do not place the treadmill on any surface that blocks air openings. To protect the floor or carpet from damage, place a mat under the treadmill.
5. Ensure that all nuts and bolts are securely tightened before using the equipment. The safety of the equipment can only be maintained if it is regularly examined for damage and/or wear and tear.
6. Always use the equipment as indicated. If you find any defective components while assembling or checking the equipment, or if you hear any unusual noises coming from the equipment during exercise, discontinue use of the equipment immediately and do not use until the problem has been rectified.
7. Wear suitable clothing while using the equipment. Avoid wearing loose clothing that may become entangled in the equipment.
8. Do not place fingers or objects into the moving parts of the equipment.
9. The maximum weight capacity of this unit is 245 lbs (110 kgs).
10. This equipment is not suitable for therapeutic use.
11. To avoid bodily injury and/or damage to the product or property, proper lifting and moving are required.
12. Your product is intended for use in cool and dry conditions. You should avoid storage in extreme cold, hot, or damp areas as this may lead to corrosion and other related problems.
13. This equipment is designed for indoor and home use only; it is not intended for commercial use!

# IMPORTANT OPERATING INSTRUCTIONS

1. Insert the power plug directly into the socket.
2. Read the manual before operating the equipment.
3. Changes in speed do not occur immediately. Set your desired speed using the adjustment keys on the main console. The speed will increase gradually.
4. While on the treadmill, move with caution as distractions may cause you to lose balance and stray from walking in the center of the belt. This may result in serious injury.
5. This unit starts at a very low speed. To begin use, hold onto the handrails and stand on the side rails while it starts up, then step onto the belt once it’s in motion.
6. A safety key is provided for emergency use. The machine will function only if the safety key is inserted into the computer console. In case of emergency, remove the safety key to immediately stop the belt and shut off the treadmill. The display screen will reset once the safety key is reinserted.
7. This equipment is designed for adult use only! Children should not be allowed to use or play near this equipment. When present, children should always be supervised by an adult.
8. Women who are pregnant or nursing should consult a physician before attempting to begin any exercise program.
9. Always stay hydrated during and after exercise.
10. Do not lift the treadmill.
11. The treadmill will automatically stop after about 15 minutes, if not in use.

# PRE-ASSEMBLY CHECK LIST

| | | |
|---|---|---|
| A | B | 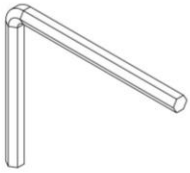 B04 |
| 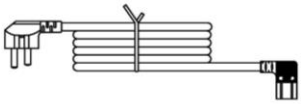 E03 | E06 | E17 |
| G | M | T |

# USER INSTRUCTIONS

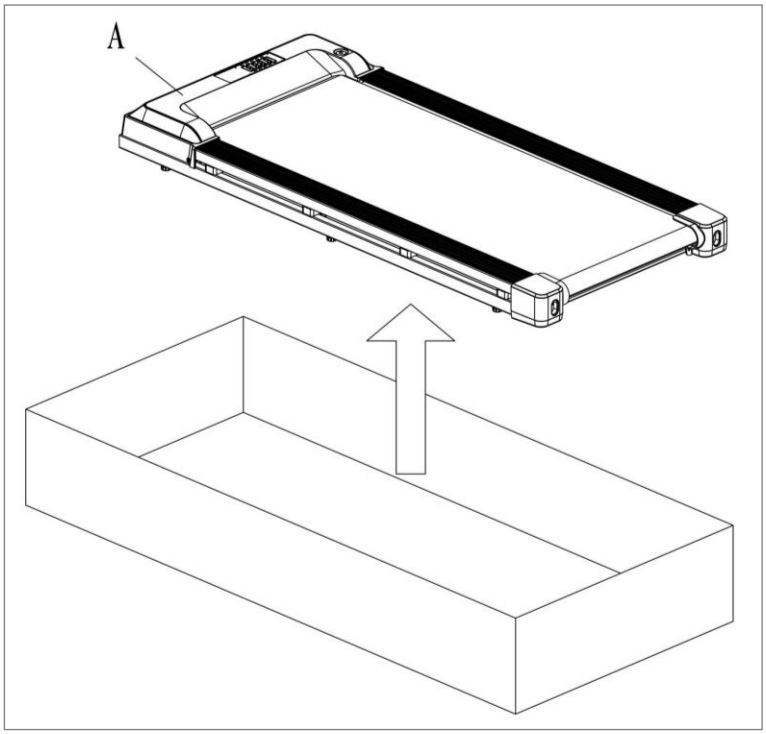


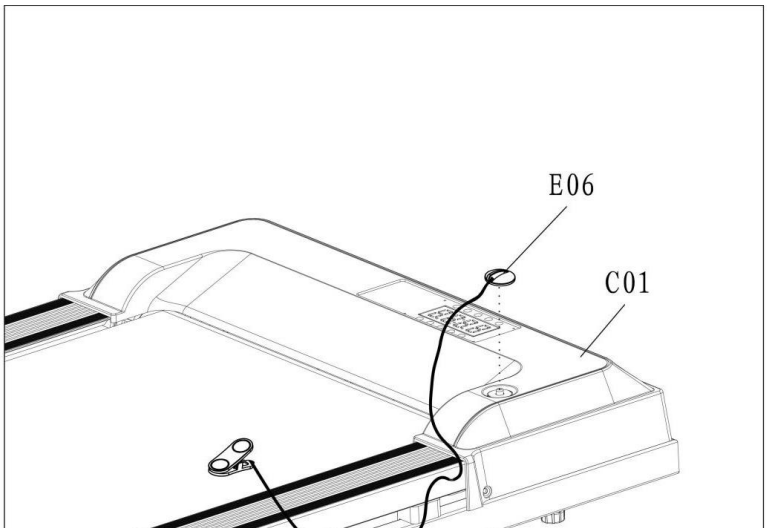

# BATTERY INSTALLATION & REPLACEMENT

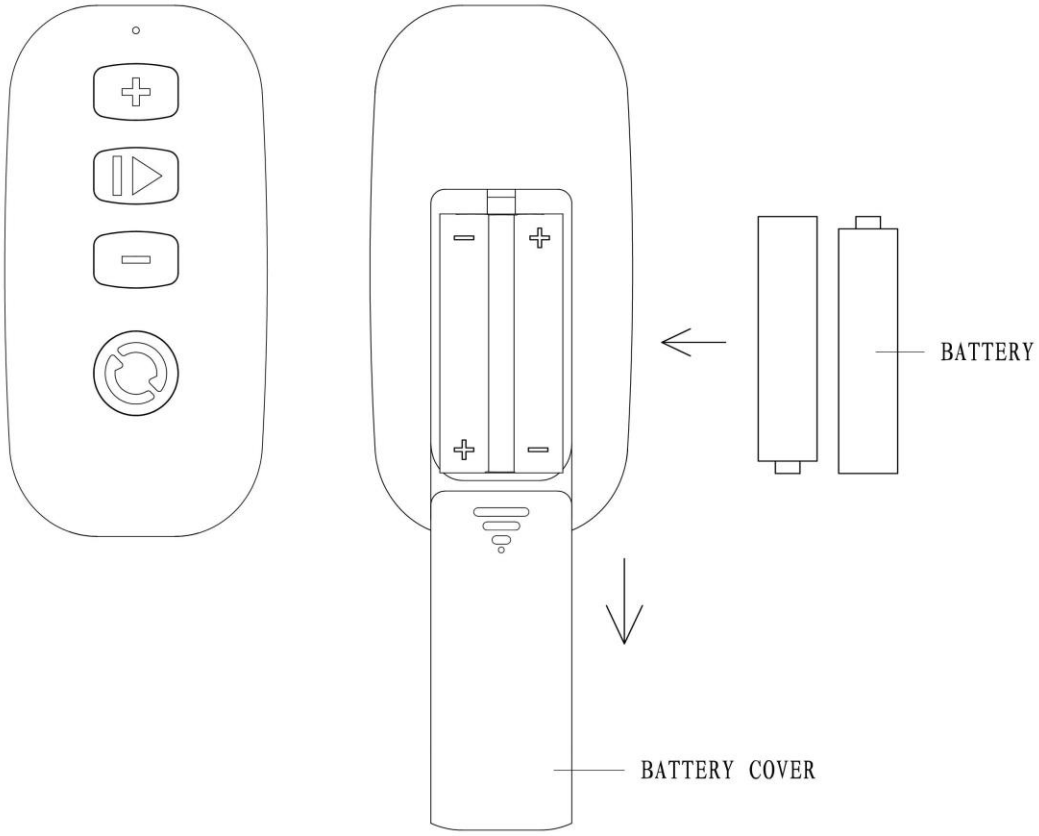


Dispose the old battery (1.5V, AAA) according to your regional guidelines.

# HOW TO MOVE THE TREADMILL

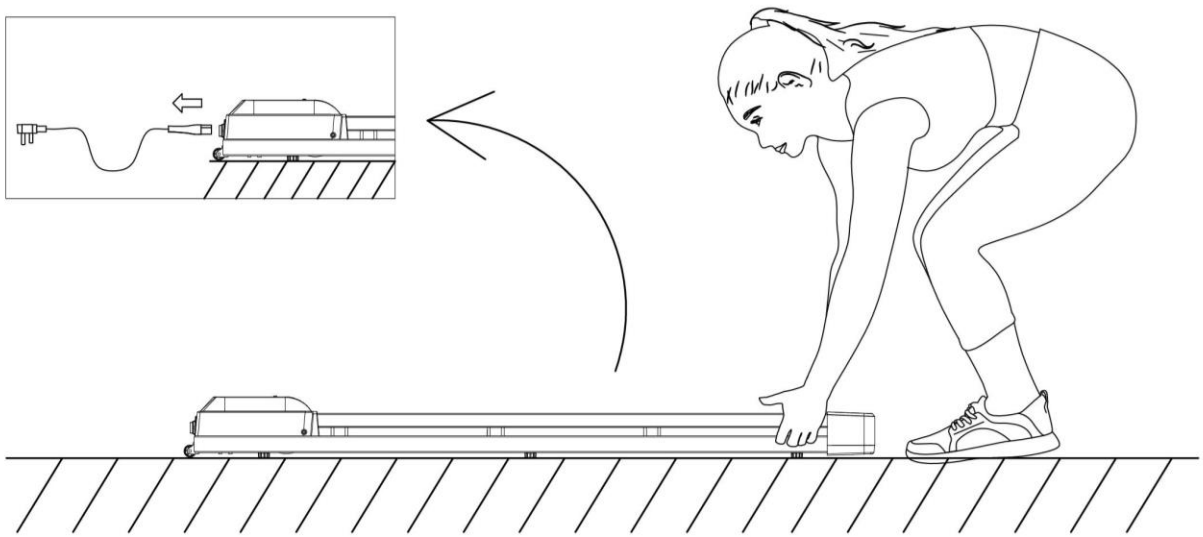

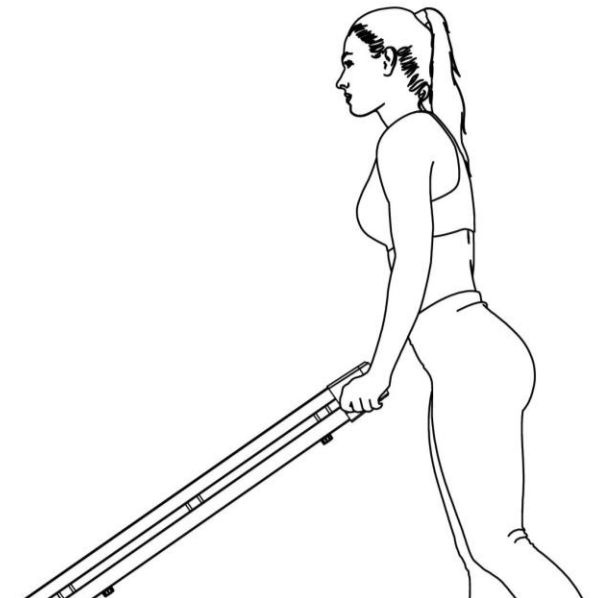

# MAINTENANCE & CARE

General cleaning will help prolong the life and performance of your treadmill. Keep the unit clean and maintained by dusting the components on a regular basis. Clean both sides of the running belt to prevent dust from accumulating underneath the belt. Keep your running shoes clean so that dirt from your shoes does not wear out the **Running Board** and **Running Belt**. Clean the surface of the **Running Belt** with a clean damp cloth. Keep liquids away from electrical parts and **Running Belt**.

To better maintain the treadmill and prolong its life, it is suggested that the treadmill be powered off for 10 minutes every 1 hour of use and fully powered off whenever not in use.

**CENTERING THE RUNNING BELT:**
Place the treadmill on level ground and set it at 2mph to check if the **Running Belt** drifts.

1. If the **Running Belt** moves to the right, turn the right adjusting bolt ¼ turn *clockwise*, then turn the left adjustment bolt ¼ turn *counter-clockwise*. If the belt does not move, repeat this step until it centers. Refer to Figure A.

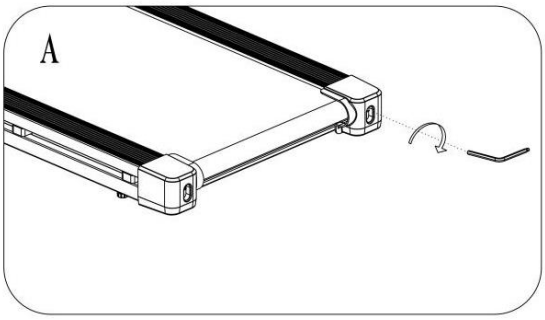


2. If the **Running Belt** moves to the left, turn the left adjusting bolts ¼ of a turn *clockwise*, then turn the right adjustment bolt ¼ turn *counter-clockwise*. If the belt does not move, repeat this step until it centers. Refer to Figure B.

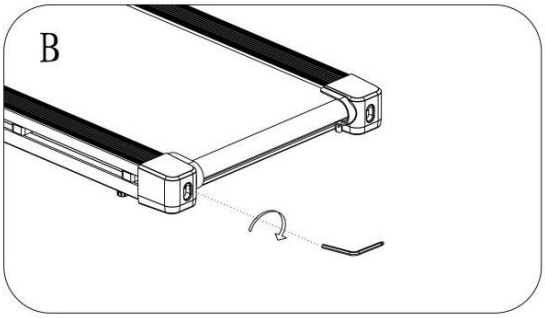


3. Over time the **Running Belt** will loosen. To tighten the belt, turn the **Left** & **Right** sides adjustment bolts one full turn *clockwise*, check the tension of the belt. Continue this process until belt is at the correct tension. Make sure to adjust both sides equally to ensure

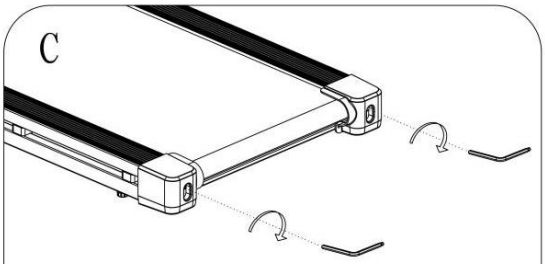

# LUBRICATING THE TREADMILL

**IMPORTANT NOTE:**
You will need to lubricate your treadmill before the first use. Clean the **Running Belt** and **Running Board** before lubricating.

**RUNNING BELT & TREADMILL LUBRICANT:**
Lubricating the **Running Board** and **Running Belt** is essential as the friction between the two affects the life span and function of the treadmill. Therefore, it is suggested that the **Running Board** and **Running Belt** be inspected regularly. Should you find any wear on the **Running Board**, please contact us at: support@sunnyhealthfitness.com.

**WARNING:** Always unplug the treadmill from the electrical outlet before cleaning, lubricating or repairing the unit.

**HOW TO LUBRICATE:**
1. To apply lubricant, lift one side of the **Running Belt** and apply oil to the middle of the **Running Board**. Next, start the treadmill and place it at the lowest speed setting and allow the oil to spread over the **Running Board**. Repeat this process for the other side.
2. The moving parts should turn freely and quietly. Abnormal moving parts will affect the safety of the equipment. Inspect and tighten bolts regularly.
3. To better maintain the treadmill and prolong its lifespan, it is suggested that maintenance be done on a regular basis.
4. DO NOT LOOSEN OR MAKE ANY ADJUSTMENTS TO THE RUNNING BELT WHILE APPLYING LUBRICANT. A loose **Running Belt** will result in the runner sliding off during use, while too tight of a **Running Belt** will negatively affect the motor's performance and create more friction between the roller and **Running Belt**. The most suitable tightness for the **Running Belt** is when it is pulled out **50-75mm** from the **Running Board**.

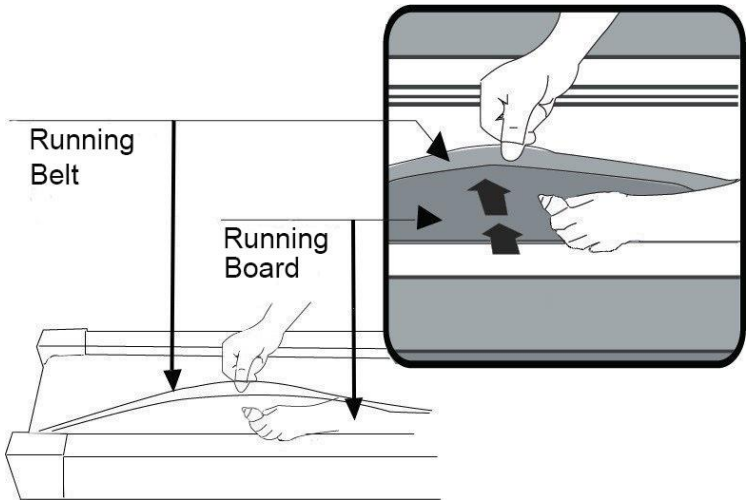


**The following time table is recommended:**

| | |
|---|---|
| Light user (less than 3 hours/ week) | *every six months* |
| Medium user (3-5 hours/ week) | *every three months* |
| Heavy user (more than 5 hours/ week) | *every two months* |

# IMPORTANT ELECTRICAL INFORMATION

**WARNING:** For your safety, as well as the safety of others, verify that the power source is correct before plugging in the equipment. Any power source above or below this level could cause significant damage to the equipment and/or user.

## GROUNDING METHODS:

This product must be grounded. Grounding provides the least resistance for electrical current and will reduce the risk of electric shock. The plug must be plugged into an appropriate outlet that is properly installed and grounded in accordance with all local codes and ordinances. Ensure that the product is connected to an outlet which contains the same configuration as the plug. Do not use an adaptor for this product.

This product is for use on a nominal 120V circuit and has a grounding plug that looks like the plug illustrated in sketch A. Make sure that the product is connected to an outlet having the same configuration as the plug. No adapter should be used with this product.

## DANGER:

Improper connection of the equipment-grounding conductor can result in a risk of electrical shock. Check with a certified electrician if you are in doubt as to whether the product is properly grounded. Do not modify the plug provided with the product. If it will not fit the outlet, have a proper outlet installed by an electrician.

## WARNING!

1. NEVER use a ground fault circuit interrupt (GFCI) wall outlet with this treadmill. Route the power cord away from any moving part of the treadmill including the elevation mechanism and transportation wheels.
2. NEVER operate the treadmill using a generator or UPS power supply.
3. NEVER remove any cover without first disconnecting AC power.
4. NEVER expose the treadmill to rain or moisture. This treadmill is not designed for use outdoors, near pools, or in any other high humidity environment.

**GROUNDING METHOD**

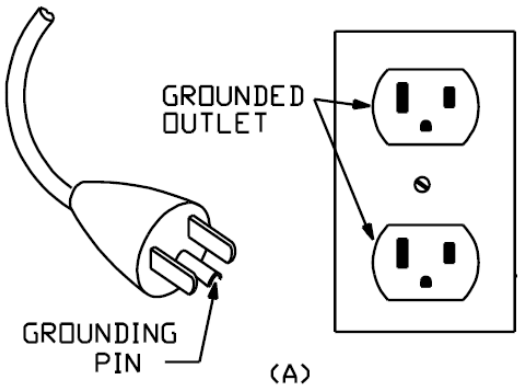


# THE DISPLAY CONSOLE

## WINDOW DISPLAY:

Displays time, distance, calories, steps, pulse and speed value every 5 seconds. Pulse will display when wireless heartrate monitor is connected.

## REMOTE CONTROL FUNCTIONS:

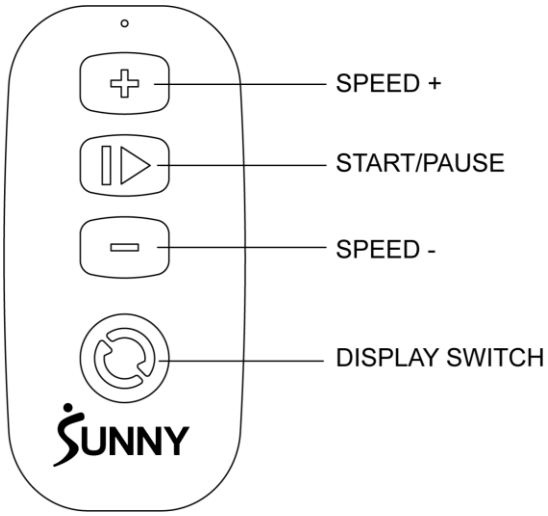


**NOTE: If the treadmill does not respond to the remote control, you will need to resync the treadmill and remote control. To sync the remote control with the treadmill, hold the start/pause button on the remote control and turn on the treadmill. Now keep holding the start/pause button for five seconds, until you will hear a "beep" sound, that means the remote control has resynced with the treadmill.**

1. **START/PAUSE BUTTON:** Press the START button to start the treadmill. 0.5 MPH (Miles per hour) is the default start speed. During exercise, you can press this button to pause the machine. In "PAUSE" mode, tap this button to restart exercise. Press this button longer to stop the machine.

2. **SPEED +/– BUTTONS:** Press the +/- buttons to increase or decrease the speed in increments of 0.1 MPH (Miles per hour). Pressing and holding either of these buttons for over ½ a second will increase or decrease the speed continuously.

3. **DISPLAY SWITCH BUTTON**: When in use, you can press this button to switch the display between Time, Distance, Calories, Steps, Pulse and Speed value.

***NOTE: The maximum speed on this treadmill is 3.7 MPH (Miles per hour).**

| PROGRAMS | Initial | Default Value | Set Range | Display Range |
|---|---|---|---|---|
| TIME (MIN: SECOND) | 0 | - | - | 0:00—99:59 |
| SPEED(MPH) | 0.0 | 0.5 | 0.5-3.7 | 0.5－3.7 |
| DISTANCE(MILES) | 0 | - | - | 0.00--99.9 |
| STEP | 0 | - | - | 0-9999 |
| CALORIE(KCAL) | 0 | - | - | 0.0--9999 |

## LUBRICATION REMINDER:

Your treadmill needs lubrication maintenance every 188 miles. The system will release a beeping sound every 10 seconds and display an "OIL" icon on your display to remind you when it's time. Please read the LUBRICATING THE TREADMILL instructions to learn the proper steps to lubricate your treadmill. After application, press and hold the STOP button for 3 seconds to clear the reminder.

## POWER SAVE FUNCTION:

When the treadmill has been idle for 10 minutes, it will enter Power Saving Mode. While the treadmill is in this mode, the window display of the console will be turned off. To turn it back on, press any button.

**NOTE:** The machine will stop automatically after 15 minutes, if not in use.

## I POWER ON:

Flick the power switch to this symbol to turn on the treadmill.

## O POWER OFF:

Flick the power switch to this symbol to turn the treadmill off at any time. This includes during exercise.

## SAFETY LOCK FUNCTION:

To stop the treadmill immediately, you can remove the **Safety Key** from the **Motor Top Cover** while the treadmill is running. Once the treadmill reaches a full stop, the window display on the console will show "----". To start the treadmill again, insert the magnet end of the **Safety Key** into the **Motor Top Cover** and press the START button.

**BLUETOOTH :**

1. The Bluetooth icon will flash when the console is on or wakes from power saving mode. If no Bluetooth connection is established within 3 minutes, the Bluetooth icon will turn off.
2. The Bluetooth icon will stay on when it is connected.

**WIRELESS HEART RATE :**

1. The wireless heart rate icon will stay on when the heart rate monitor is connected.
2. The console can be connected to the heart rate monitor at any time except in power saving mode.
3. The wireless heart rate icon will flash when the console is on. If the heart rate monitor is not connected within 3 minutes, the wireless heart rate icon will turn off.

**NOTE:** The heart rate monitor is not included. Wireless heart rate function works with SunnyFit Heart Rate Monitor HR200.

**WIFI :**

1. If access point is not configured or fails to be configured, the WIFI indicator light will turn off.
2. After configuring access point, the WIFI indicator light will flash during the connection to the server.
3. The WIFI indicator light will stay on when the server is successfully connected.

**NOTE:**

1. WIFI function only supports 2.4G frequency, not 5G frequency.
2. Please use SunnyFit APP to configure WIFI and configure it according to the wizard on SunnyFit APP.

**TECHNICAL DATA**

Connectivity: Bluetooth LE & WIFI
Frequency Range: 2400~2483.5Mhz
Transmitting Power: 0dBm

## APP CONNECTION:

Connect Smart Equipment to SunnyFit App:

1. Scan to download SunnyFit from the app store:

2. Ensure that the Bluetooth function is turned on from your mobile device.
3. If this is your first time using the SunnyFit app, follow the in-app instructions to register for your free SunnyFit account and log in.
4. Begin any workout activity that matches your smart equipment, then follow the onscreen prompts to search for and connect to your smart equipment.
5. When connected, your stats and records will be displayed at the end of your course/session, and recorded in your account profile!

# EXERCISE INSTRUCTIONS

**GETTING STARTED:**

Before starting any exercise program, you should consult your physician to determine if you have any medical or physical conditions that could put your health and safety at risk or prevent you from using the equipment properly.
Be aware of your body's signals. Incorrect or excessive exercise can damage your health.
Stop exercising immediately if you experience any of the following symptoms: pain, tightness in your chest, irregular heartbeat, shortness of breath, lightheadedness, dizziness, or feelings of nausea.

Get to know your treadmill. Before attempting to use the treadmill take some time to stand alongside and familiarize yourself with the controls.

1. Before beginning exercise, stand on side rails.
2. Next, attach the clip end of the **Safety Key** to your clothes and insert the magnetic end to the console.
3. Press the START button to start the machine.

4. The machine will start at the system default setting speed of **0.5 MPH**. When you feel comfortable, you may slowly increase the speed.
5. When you are finished with your exercise, press the STOP button or you can remove the magnetic end of the **Safety Key** to stop the machine.

# TROUBLESHOOTING

| PROBLEM | POSSIBLE CAUSE | SUGGESTED ACTION |
|---|---|---|
| Treadmill will not start | Not plugged in. | Plug cord into outlet. |
| | Safety Key not inserted. | Insert Safety Key. |
| Running belt not centered | Running belt tension not correct on the left or right sides of the running board. | Tighten the adjustment bolts on the left and right side of the rear roller. |
| Console not working | Wires from the console and bottom control board are not properly connected. | Check wire connections from the console to the control board. |
| | Transformer is damaged. | If the transformer is damaged, contact customer service. |

| | | |
|---|---|---|
| E01/E13 ERROR: Message failure | Wires from the console and bottom control board are not properly connected. | Check wire connections from the console to the control board. If the wire has been punctured or damaged, you will need to replace it. If the problem is not rectified, you may need to replace the control board. |
| E02 ERROR: Burst clash protection | Incoming voltage is lower than 50% of the required voltage. | Check that the incoming power supply is the correct voltage. |
| E05 ERROR: Current overload protection (Self Protecting System) | The incoming voltage is too low or too high. The control board is damaged. | Restart the treadmill. Check the incoming voltage to ensure its correct. Check the control board, replace if damaged. |
| | A moving part on the treadmill is stuck and therefore the motor is unable to rotate properly. | Inspect moving parts on the treadmill to ensure that they are operating correctly. Check the motor, listen for any strange noises and check for a burning smell. Replace the motor if necessary. |
| E06 ERROR: Motor abnormality | The motor wire is not connected, or the motor is damaged. | Check motor wires to see if the motor is connected. If the wire has been punctured or damaged, you will need to replace it. If the problem is not rectified, you may need to replace the motor. |
| E08 ERROR: Control board abnormality | The control board is not connected. | Check the upper and middle wires to see if the control board is connected. If the wire has been punctured or damaged, you will need to replace it. If the problem is not rectified, you may need to replace the control board. |
| E09 ERROR: Inversion error | The treadmill sets upright or not placed horizontally. | Adjust the treadmill and place it horizontally.<br>If the wires of the control board do not connect well, replace to a new control board. |

| | | |
|---|---|---|
| E10 ERROR: Motor abnormality | The motor is damaged, or a moving part of the treadmill is stuck and therefore the motor is unable to rotate properly. | Inspect moving parts of the treadmill to ensure that they are operating correctly. Replace the motor if necessary. |

**NOTE:**

1. If you are having trouble connecting your smart equipment, visit www.sunnyfit.com/guide or scan the QR code below:
2. If you require additional support, please contact support@sunnyfit.com.

# EXPLODED DIAGRAM

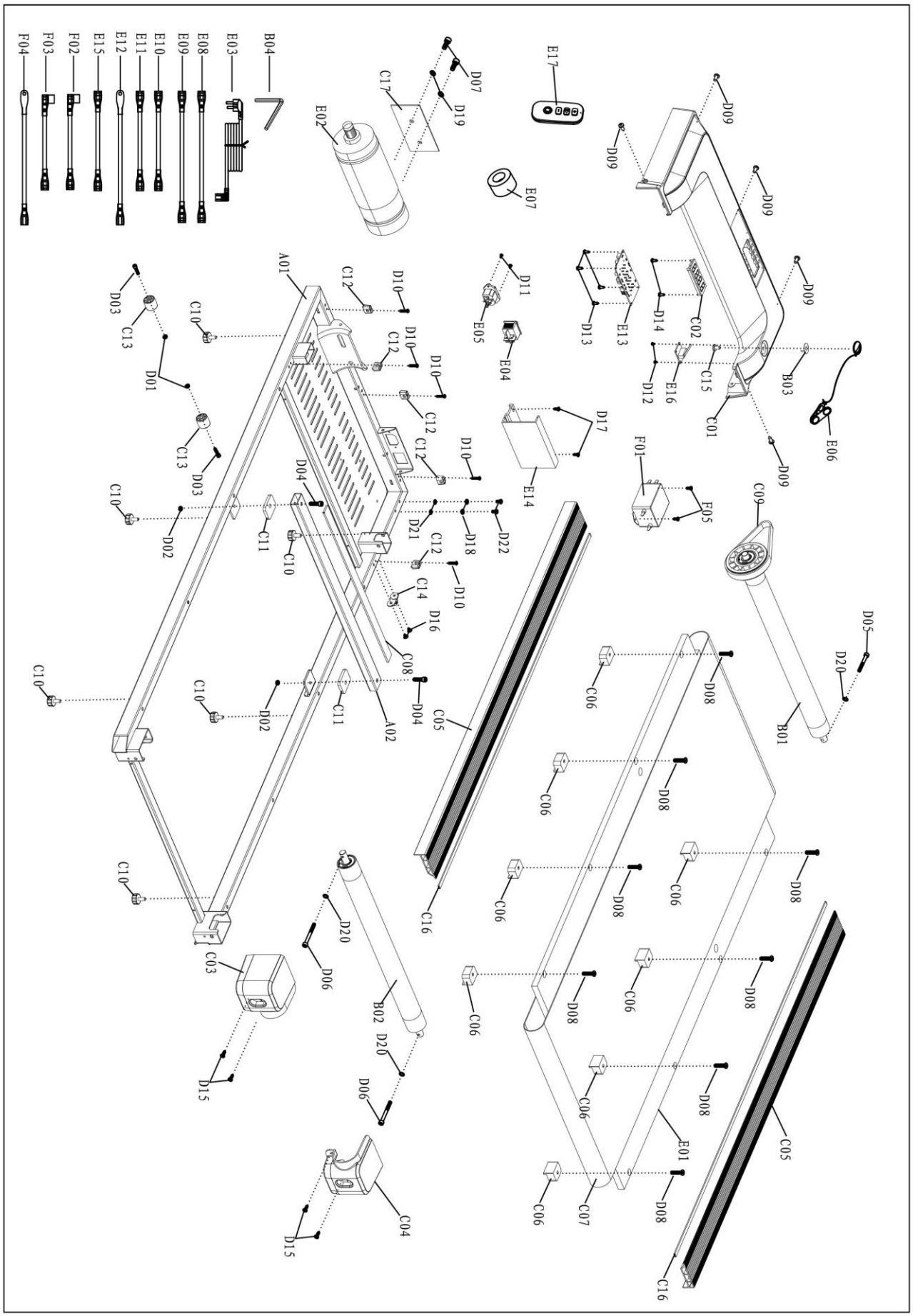
F04
F03
F02
E15
E12
E11
E10
E09
E08
E03
B04
E17
D07
D19
C17
E02
E07
D09
A01
C12
D10
D11
E05
E04
D13
E13
D14
C02
D12
E16
C15
B03
C01
E06
D03
C13
C10
D01
D17
E14
F01
F05
C09
D04
D21
D18
D22
C11
D02
C14
D16
C08
A02
C05
C06
D08
D05
D20
B01
C03
D06
B02
D15
C04
C07
E01
C16

# PARTS LIST

| No. | Description | Spec. | Qty. |
|---|---|---|---|
| A01 | Main Frame | | 1 |
| A02 | Running Board Strengthen Tube | | 1 |
| B01 | Front Roller | | 1 |
| B02 | Rear Roller | | 1 |
| B03 | Safety Key Plate | | 1 |
| B04 | Allen Wrench | 5mm | 1 |
| C01 | Motor Top Cover | | 1 |
| C02 | Optical Grating | | 1 |
| C03 | Left End Cap | | 1 |
| C04 | Right End Cap | | 1 |
| C05 | Side Rail | | 2 |
| C06 | Cushion | | 8 |
| C07 | Running Belt | | 1 |
| C08 | EVA pad 1 | | 1 |
| C09 | Motor Belt | | 1 |
| C10 | Foot Pad | | 6 |
| C11 | Rubber Cushion | | 2 |
| C12 | Fixed Plate | | 5 |
| C13 | Transportation Wheel | | 2 |
| C14 | Lead Wire Buckle | | 1 |
| C15 | Safety Key Marble | | 1 |
| C16 | EVA Pad 2 | | 2 |
| C17 | EVA Pad 3 | | 1 |
| D01 | Nut | M5 | 2 |
| D02 | Nut | M6 | 2 |
| D03 | Bolt | M5*35 | 2 |
| D04 | Bolt | M6*30 | 2 |
| D05 | Bolt | M6*35 | 1 |
| D06 | Bolt | M6*65 | 2 |
| D07 | Bolt | M8*12 | 2 |
| D08 | Bolt | M6*60 | 8 |
| D09 | Screw | ST4.2*12 | 5 |
| D10 | Screw | ST4.2*20 | 5 |
| D11 | Screw | ST2.9*8 | 2 |

| No. | Description | Spec. | Qty. |
|---|---|---|---|
| D12 | Screw | ST2.5*6 | 2 |
| D13 | Screw | ST2.2*8 | 4 |
| D14 | Screw | ST2.0*8 | 2 |
| D15 | Screw | ST4.2*12 | 4 |
| D16 | Screw | ST4.2*12 | 2 |
| D17 | Bolt | M5*12 | 2 |
| D18 | Spring Washer | 5 | 2 |
| D19 | Spring Washer | 8 | 2 |
| D20 | Locking Washer | 6 | 3 |
| D21 | Locking Washer | 5 | 2 |
| D22 | Bolt | M5*12 | 2 |
| E01 | Running Board | | 1 |
| E02 | DC motor | | 1 |
| E03 | Power Cord | | 1 |
| E04 | Square Switch | | 1 |
| E05 | Power Socket | | 1 |
| E06 | Safety Key | | 1 |
| E07 | Magnetic Core | | 1 |
| E08 | AC Single Line 350mm | Brown | 1 |
| E09 | AC Single Line 350mm | Blue | 1 |
| E10 | AC Single Line 200mm | Brown | 1 |
| E11 | AC Single Line 200mm | Blue | 1 |
| E12 | Grounding Wire | | 1 |
| E13 | Console | | 1 |
| E14 | Control Board | | 1 |
| E15 | Console Communication Wire | | 1 |
| E16 | Induction Switchboard | | 1 |
| E17 | Remote Control | | 1 |
| F01 | Filter | | 1 |
| F02 | AC Single Line 350mm | Blue | 1 |
| F03 | AC Single Line 350mm | Brown | 1 |
| F04 | Grounding Wire | | 1 |
| F05 | Bolt | M4*6 | 2 |
| | | | |

Version 1.0

# CONNECT with us

## DOWNLOAD

Track your fitness progress & join
**FREE** workout courses!

Download SUNNYFIT today!

GET IT ON Google Play

Download on the App Store

## FOLLOW

**Find us on social media @sunnyhealthfitness**

@sunnyhealthfitness

@sunnyhealthandfitness

@sunnyhealthfit

/sunnyhealthfitness

/sunnyhealthfitness

/sunnyhealthandfitness

**www.sunnyhealthfitness.com**