Huizhou Qitai Electronic Technology Co., LTD

Specification 规	CUSTOMERP/N:	
	PARTNUMBER:	502.0007000172

1. DIMENSIONS(外形尺寸):(Unit:mm)

单位（Unit）：毫米（mm）

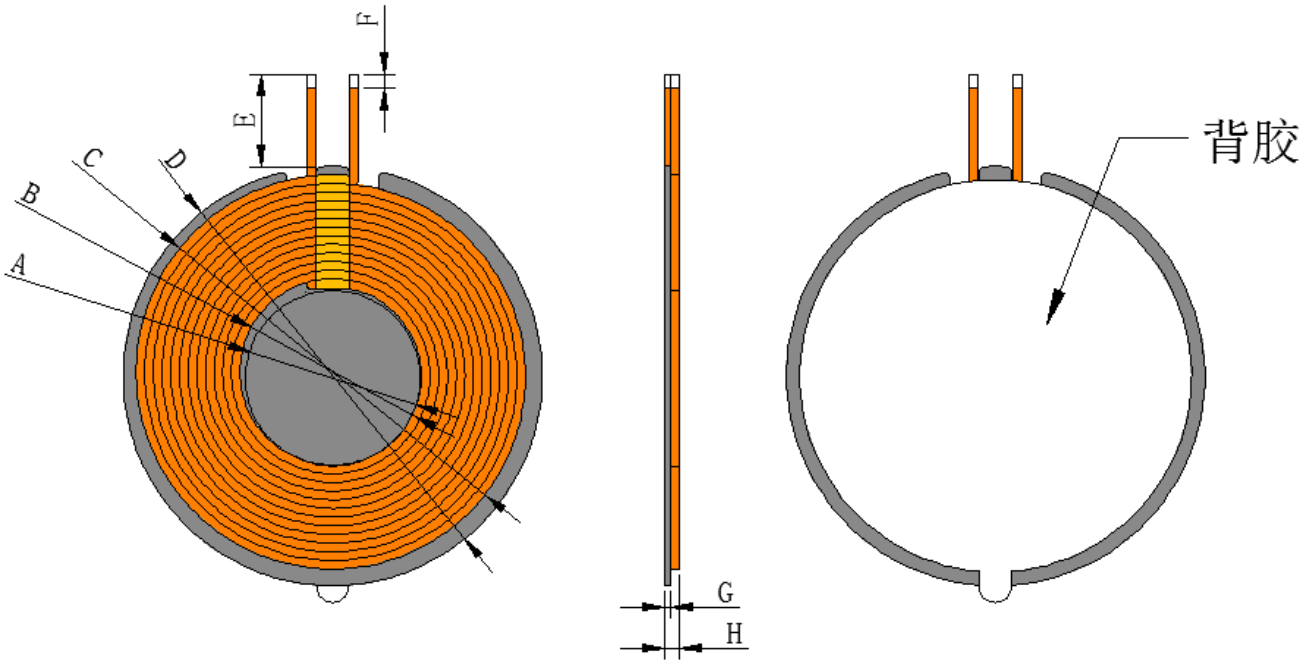

A	B	C	D	E	F	G	H
15±0.5	20.5±0.5	39.6±0.5	42.5±1	7±1	2±1	0.8±0.1	2.5Max

APPROVEDBY	CHECKEDBY	PREPAREDBY	DATE	PAGE
晁子奇		冯欣	2024-8-19	2of3

Huizhou Qitai Electronic Technology Co., LTD

Specification	CUSTOMERP/N:	
	PARTNUMBER:	502.0007000172

2. WINDINGDETAILS
Coil1

Turns	**WireDia**	**Wdg.Type Spred/Close**	**Wdg.Direction**	**IntersectYes/Not**
11TS	0.08*100P	Close	Reverse winding	Yes

3.（ELECTRICALCHARACTERISTICS）:
TEMPERATURE:25±10℃,RELATIVEHUMIDITY:65±10%

NO.	**ITEM**	TERMINAL	**SPECIFICATION**	TEST FREQUENCY	TEST EQUIPMENTS
Coil 1					
1.	IND	S-F	7.9uh±0.3uh	100kHz/V	UC2906A
2.	Q	S-F	70Min	100kHz/V	UC2906A
3.	DCR	S-F	60Max	100kHz/V	UC2906A

Factory Address：8th Floor, Building 2, No. 123 Sanjia High tech Industrial Park, Junfa 3rd Road, Dongkeng Town, Dongguan

APPROVEDBY	CHECKEDBY	PREPAREDBY	DATE	PAGE
晁子奇		冯欣	2024-8-19	3of3