Shenzhen Aihui Technology Co. , Ltd.

Antenna specification

Antenna Sample Confirmation From

Name of supplier	ShenZhen Aihui Technology Co., Ltd				
Customer name					
Sample name	DC417				
model					
Sample size	Wire length: 70mm 3rd generation terminals				
Inspection item	Performance test	Visual inspection	Structure	In the news	Test results
Notes					
Quality Audit		Project Audit		Business confirmation	
The following is to be completed by the client					
Customer feedback					

CaoYang

Address: 402TEL: 0755-23203435fax: 0755-23203435, Block C, Juxin Science and Technology Industrial Park, Nanchang community, xixiang, Baoan District, Shenzhen

Customer signature/seal	date:

Antenna Test Report

Test Unit: Shenzhen Aihui Technology Co. , Ltd.			
Materials	FPC coaxial line		
Antenna type	**MonopoleType**	Polarization mode	**Linear**
Application scenario			
Working band	**2.4G-WIFI**	**VSWR**	**≤2**
Power	**Max：2W**	**Impedance**	**50Ω**

Addre CaoYang i-23203435fax: 0755-23203435, Block C, Juxin Science and Technology Industrial Park, Nanchang community, xixiang, Baoan District, Shenzhen

dBi	
Test Equipment	**HPE5071C、Shielding Room、3D automatic turntable**

Antenna Description:：

1. Grounding processing and picture description: no

2. Need to change the motherboard to match: no

- Test voltage: 3.6V, check the antenna contact is good before testing.
- The RF cable of the integrated tester is kept in a natural state and can not be curled.

Specification:test the specified power level, all indicators must conform to the specifications.

1.Project Image

The final verification antenna performance prototype in our company for at least one year, easy to analyze and solve the problem of antenna mass production, to ensure the quality of antenna shipment

2.Test Fixture

Objective: to test the passive parameters of antenna as accurately as possible. Making Method: the handset is made of a 50 ohm coaxial cable, one end of which is connected to the test point of the back end of the matching circuit of the handset motherboard (front end of the RF test hole) , and the other end is connected to the SMA joint. The diagram is as follows:

3、Antenna matching circuit

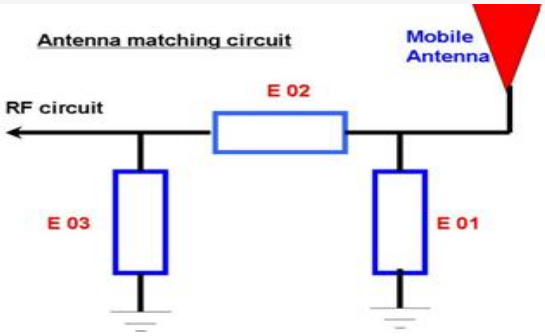

Modify

E01	E02	E03
No	No	No

Note: The match is unmodified.

Address: 402TEL: 0755-23203435fax: 0755-23203435, Block C, Juxin Science and Technology Industrial Park, Nanchang community, xixiang, Baoan District, Shenzhen

4.S11 test

4.0 4.0s11 test method description of test equipment: Network Analyzer (E5071C) test method: a 50 ohm CABLE is used to export from the instrument test port. The SMA connector for connecting the handset is calibrated using a calibration piece, record the echo loss and standing wave ratio corresponding to the relevant frequency points. The test schematic is as follows:

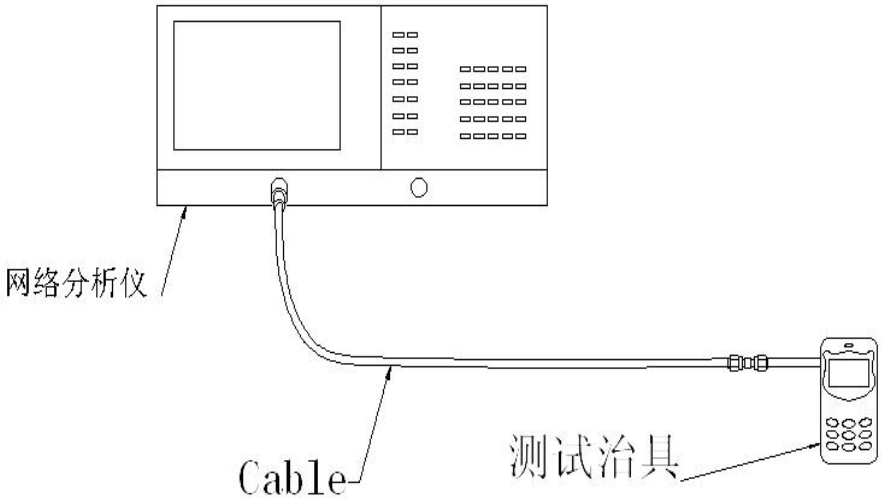

5.Darkroom test equipment and data

5.1.Test Equipment

Test system: shielded darkroom

The temperature was 22 ° C ± 3 ° C and the humidity was 50% ± 15%

Test equipment: when testing passive data, use the Network analyzer AGILENTE5071C to test active data, use the omnibus CMW500

5.2. Passive antenna test data

Gain&Efficiency			
frequency (Hz)	gain (dB)	efficiency (dB)	efficiency
2400M	1.46	-3.96	56.47%
2410M	1.32	-3.88	55.16%
2420M	1.24	-3.73	55.11%
2430M	1.31	-3.81	54.21%
2440M	1.26	-3.35	53.03%
2450M	1.39	-3.14	54.41%
2460M	1.13	-3.26	53.74%
2470M	1.18	-3.12	52.38%
2480M	1.23	-3.31	51.37%
2490M	1.03	-3.76	50.28%
2500M	1.04	-3.84	50.66%

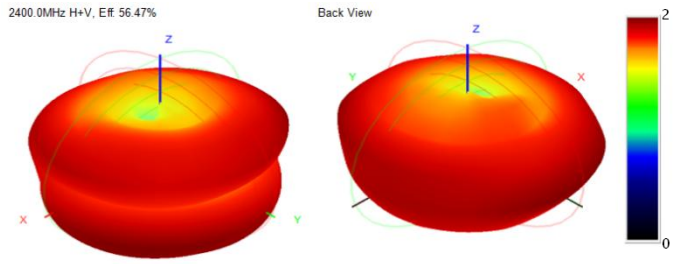

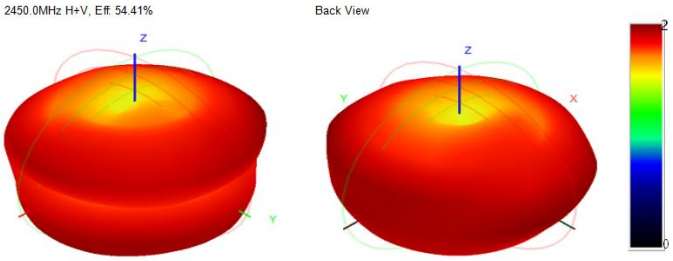

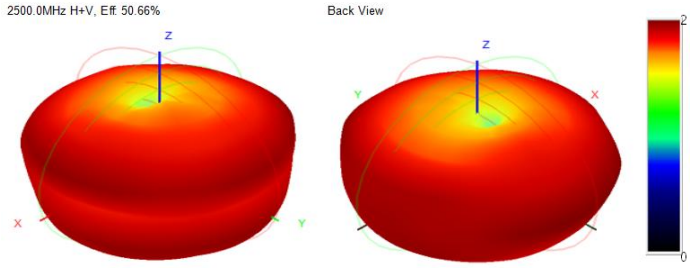

8.Antenna environment handling

Prototype environmental processing

9.Antenna mass production index

When the antenna is mass-produced, the SWR is taken as the mass-produced test standard. Based on the differences of the project itself, the following criteria are given:

Frequency	Standard for volume production
2400MHZ -2500MHZ	VSWR（Massproduction performance） <VSWR(Recognition of performance)+0.5

10. Structural drawings

Shenzhen Aihui Technology Co. , Ltd.

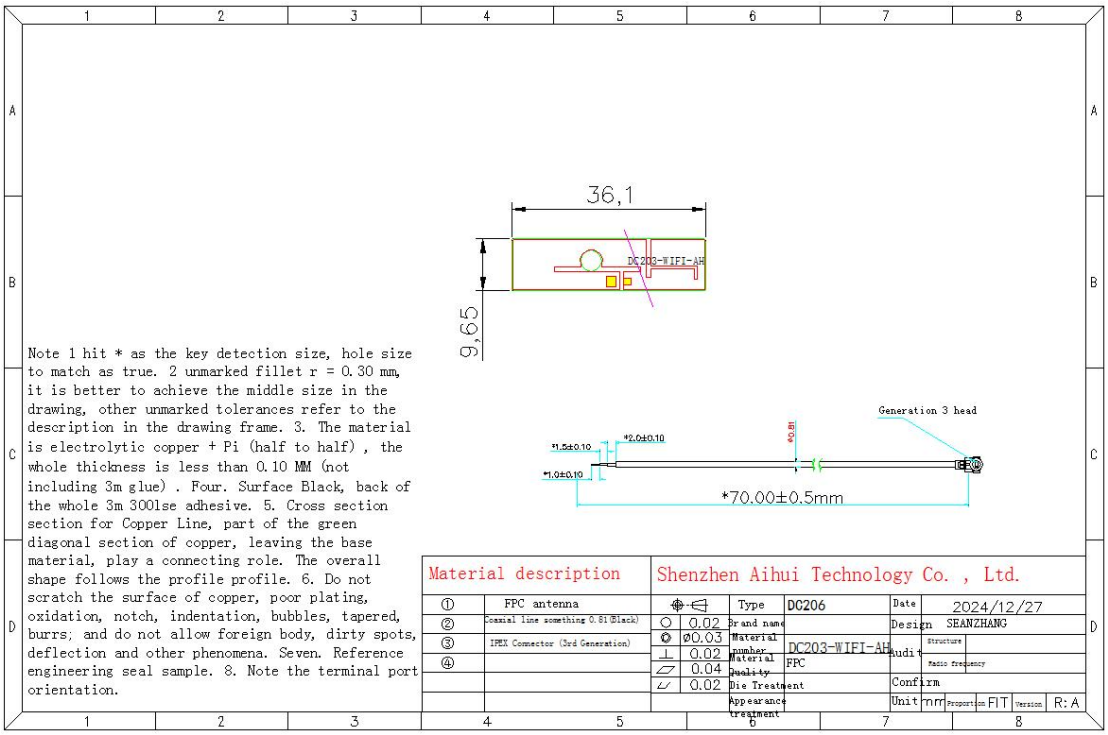

Address: 402TEL: 0755-23203435fax: 0755-23203435, Block C, Juxin Science and Technology Industrial Park, Nanchang community, xixiang, Baoan District, Shenzhen