5K WATERPROOF CAMERA

User manual

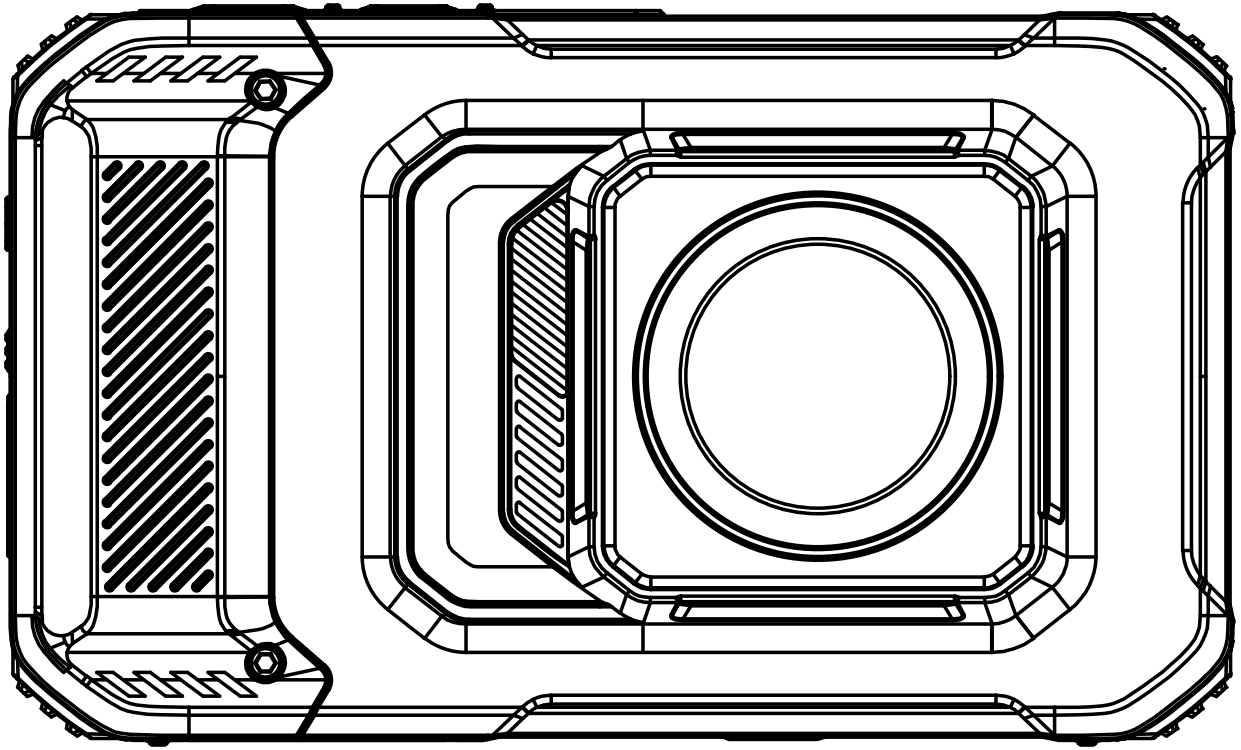

Product Characteristics

- ❖ Ultra-high video resolution, supports 5K 30fps.
- ❖ Ultra-high photo resolution, supports 96MP.
- ❖ 60 filters, 8 film effects, 10 scene modes, 5-level beauty enhancement, enabling ultra-free shooting.
- ❖ Supports HDR (High Dynamic Range) imaging, capturing more details.
- ❖ 10-meter water resistance, 1.5-meter drop resistance, IP6X rated for complete dust resistance, suitable for multi-scenario use.
- ❖ Supports ISO100-6400, enabling low-light shooting in varying conditions.
- ❖ 8X digital zoom, ultra-fast focusing.
- ❖ High-speed continuous shooting, capturing every action.
- ❖ Built-in high-power LED flash.

Camera usage tips

Camera safety and operation

- Please do not disassemble or repair the camera yourself.
- Avoid exposing the camera to extreme temperatures or humid environments.
- When transitioning from a cold environment to a warm one, one must adapt gradually to prevent condensation.
- Do not press the lens hard or expose it to direct sunlight for extended periods.
- Clean with a slightly damp soft cloth only, and avoid using chemical solvents.
- Handle with care to avoid impacting the camera's display screen.

Camera usage warning

- Do not point the flash directly at people's eyes at close range, as it may cause discomfort or injury.

- Do not operate the camera while walking or driving to prevent accidents.
- Do not allow the camera strap to entangle around a child's neck, as it poses a risk of suffocation.

Camera maintenance tips

- When the camera is not in use, please store it in a cool and dry place and remove the battery.
- Please wear a lanyard when using the camera to prevent it from accidentally falling.
- Using a camera bag can prevent scratches on the lens and screen.
- When cleaning the lens, please gently blow away the dust first, and then wipe it with a cloth specifically designed for optical equipment. If necessary, Lens cleaning solution can be used.
- Do not use organic solvents to clean the camera.
- Avoid touching the lens directly with your hands, as dirt on the lens can affect the imaging quality.

Storage card usage tips

Formatting and compatibility

- The new card needs to be formatted before its first use, and cards previously used in other devices also need to be reformatted.
- Do not directly use a memory card that has been formatted by another camera, video recorder, or card reader.

Operational precautions

- Before inserting or removing the memory card, turn off the camera power.
- Avoid bending, dropping, or squeezing the memory card, and keep it away from strong magnetic/electric fields.
- It is normal for the memory card to become slightly warm after prolonged use.

Data protection

- Do not power off or remove the card when recording, deleting, formatting, or reading data.
- Regularly back up important data to other storage devices.

Introduction of camera parts

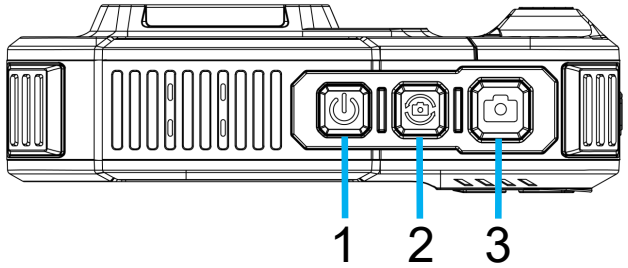

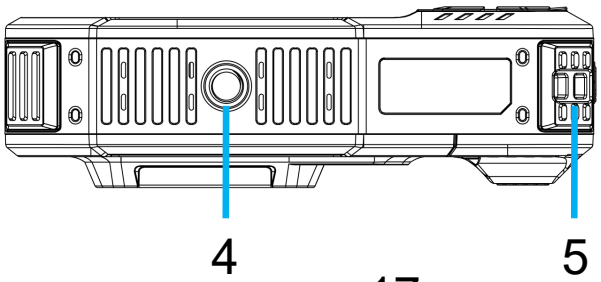

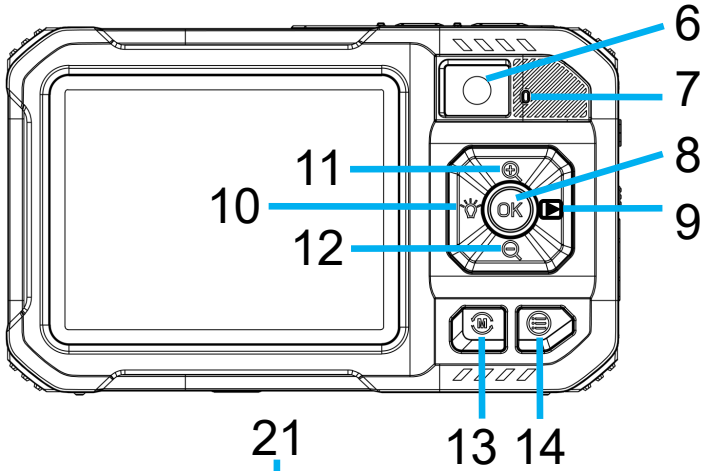

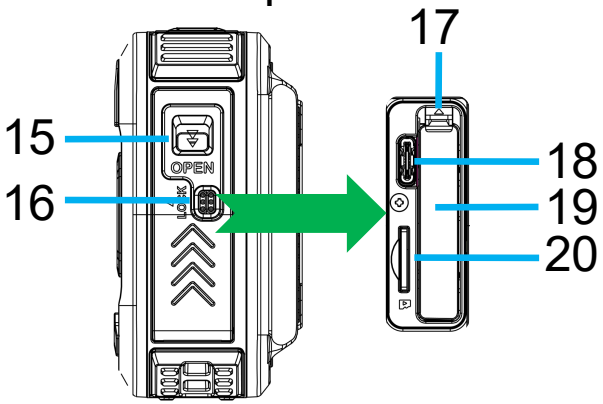

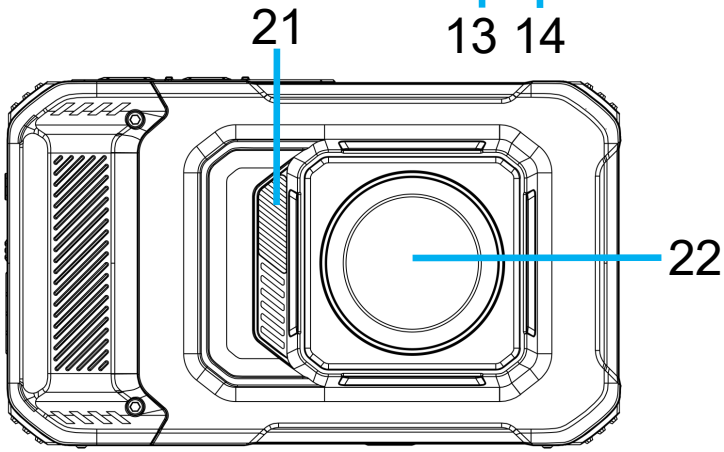

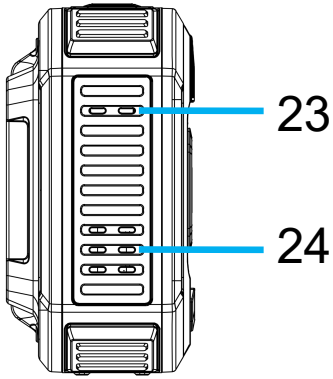

No.	Name	Function
1	Power Button	Short press to turn on the camera. Long press to turn off the camera.
2	Camera switch button	Switch between main camera and selfie camera.
3	Shutter Button/ Confirm Button	Photo mode: Press halfway down to auto-focus, full press to take photo. Video mode: Press halfway down to auto-focus, full press to record.
4	Tripod Mount	Standard screw port
5	Hook	Attachable camera strap
6	Selfie camera	Can be used for selfie
7	Indicator Light	The blue indicator lights up 1 time to indicate that it is taking a picture. The blue light is flashing when recording. The red light is on when charging.
8	OK button	Confirm button. Pause/resume video playback. Photo Mode: Pop up the filter menu.

9	Right button (playback)	Shot preview: Turn on playback mode to view photos and videos. Playback mode: Short press to enter the next file selection of photo and video.
10	Left button (flash)	Shot preview: Switch to flash mode (for taking photos); Switch to fill light mode (video recording). Playback mode: Short press to enter the previous file selection of photo and video.
11	Up button (zoom in)	View Photos: Zoom In. Photo/Video: Focus Closer. Menu selection.
12	Down button (zoom out)	View Photos: Zoom Out. Photo/Video: Increase Focus Distance. Playback Mode: Enter the album and display thumbnails. Menu selection.
13	Mode Button	Switch the shooting mode(Photo/ Video)
14	Menu Button	Short press to enter the menu setting bar, and then short press to return.
15	Battery Cover	Install battery, Micro SD card, and USB port.

16	Battery Warehouse Switch	Battery cap Lock / unlock
17	Battery latch	Fixed battery
18	USB Port	Support Type-C/ USB
19	Battery Slot	Battery storage location
20	Micro SD card Slot	Support up to 1T (Micro SD Card)
21	LED light	Support flash and fill light functions
22	Lens	/
23	MIC hole	Sound pickup
24	Horn hole	/

Preparation before Use

Battery Cover ON / OFF

1. Turn on the battery cover: Slide the battery compartment switch to the left and hold it, then flip the cover open outward.

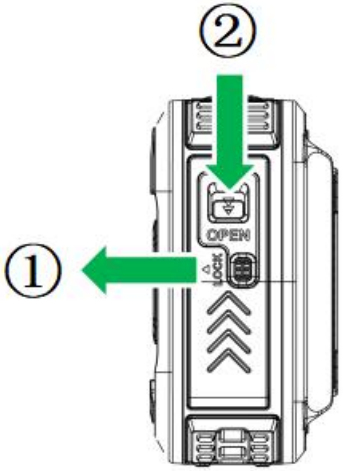

2. Turn off the battery cover: Press the battery compartment cover down until you hear a click, indicating that the switch is locked and the cover is securely closed.

Battery Insert / Remove

1. To install the battery:

a. Open the battery compartment cover. b. Insert the battery, aligning the electronic contacts as illustrated, until the lock engages with an audible click.c. The battery is now securely installed.

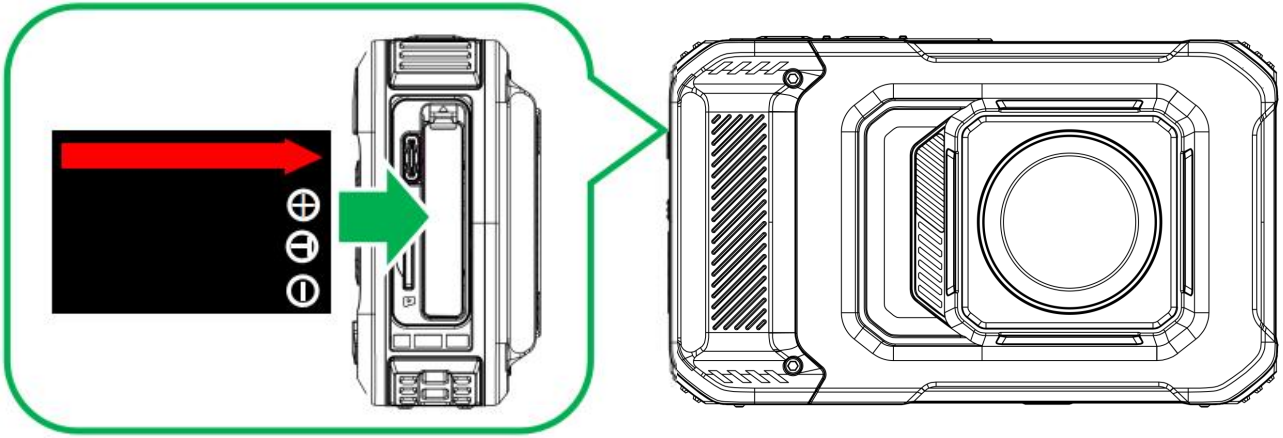

2. To remove the battery:

a. Open the battery compartment cover.

b. Push the battery lock to release it, and then take out the battery.

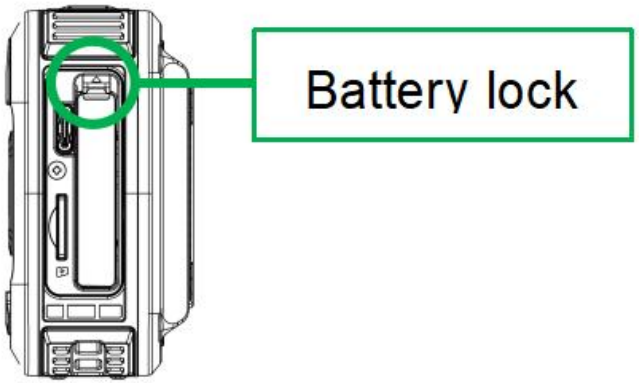

How to Charge the Camera

1. Please use the Type-C/USB cable to charge the camera. (Do not charge under water.)

① Use a Type-C/USB cable paired with a 5V charger to charge the camera;

② Connect the camera to the computer using a Type-C/USB cable.

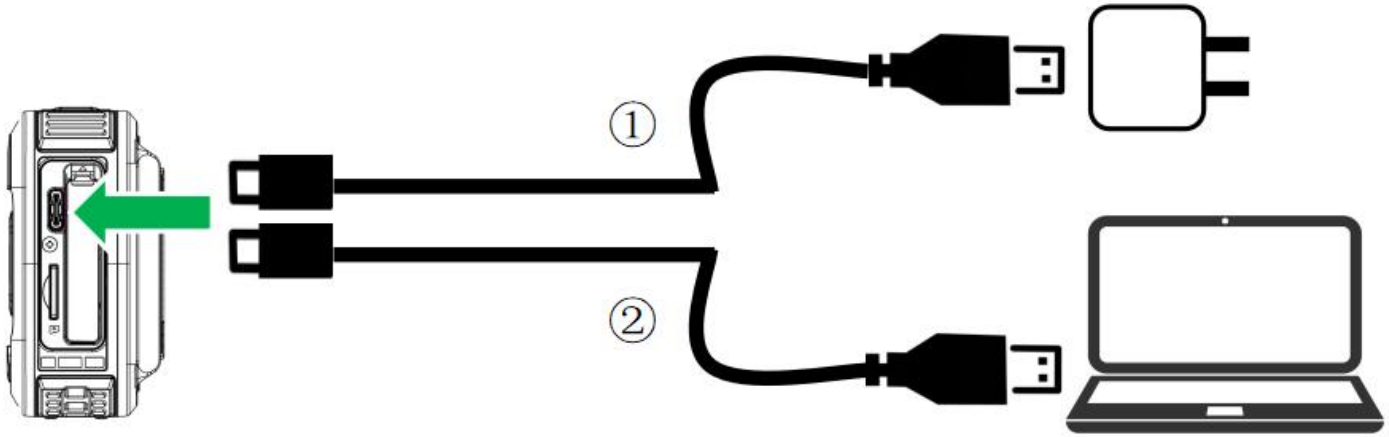

2） When the camera light goes out, it means the camera is fully charged.

Note: If the charging light flickers slightly, it indicates that the battery is not installed or reversed. Please check if the battery is installed correctly.

Micro SD Card Insert / Remove

1） Insert the Micro SD card: As shown by the illustration, face the card's metal contacts side toward you and insert it until it locks in place.

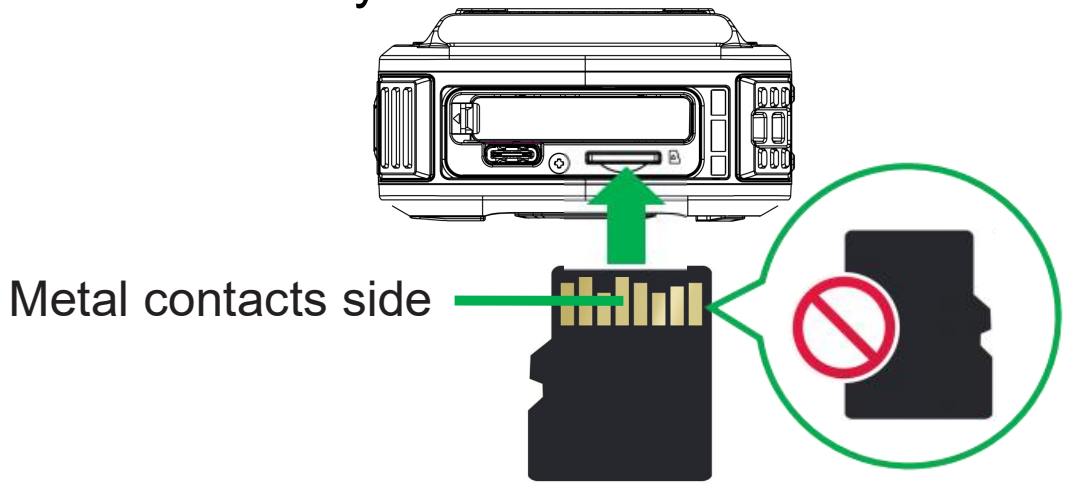

2）Remove the Micro SD card：Press the Micro SD card, then it can pop up.

Caution: 1. This camera is compatible with 1TB Micro SD cards. Class10 is recommended, we do not recommend using U3 level card.

2. When the Micro SD card is used for the first time, please format it by the camera.

How to format a memory card

1. In photo or video mode, press the Menu button to enter the camera menu. Use the Right button to select the camera system settings【 ⚙ 】, then press the Down button to choose the "Format Memory Card" option.
2. Press the OK button to confirm formatting.
3. Press the Menu button again to exit the system settings page.

Camera Setting

System Settings

1. In photo or video mode, press the Menu button to enter the camera menu. Use the Right button to select the camera system settings【 】.
2. Use the Up and Down buttons to select a menu item, then press the OK button to enter the sub-options.
3. After completing the settings, press the Menu button again to exit the system settings.

Photo Settings

1. In photo or video mode, press the Menu button to enter the camera menu. The photo settings【 】 will open by default.

2. Use the Up and Down buttons to select a menu item, then press the OK button to enter the sub-options.

3. After completing the settings, press the Menu button again to exit the photo settings.

Recording Settings

1. In photo or recording mode, press the Menu button to enter the camera menu. Use the Right button to select the recording settings【 】.

2. Use the Up and Down buttons to select a menu item, then press the OK button to enter the sub-options.

3. After completing the settings, press the Menu button again to exit the recording settings.

Playback Settings

1. In photo/recording mode, press the Right button to enter the camera's playback mode.
2. In playback mode, press the Menu button to enter the playback menu. Then, press the Right button to switch between the playback settings【 】and system settings.
3. In the playback settings, use the Up and Down buttons to select a menu item, then press the OK button to enter the sub-options.
4. After completing the settings, press the Menu button again to exit the playback settings.

Photo Mode

Take Still Image

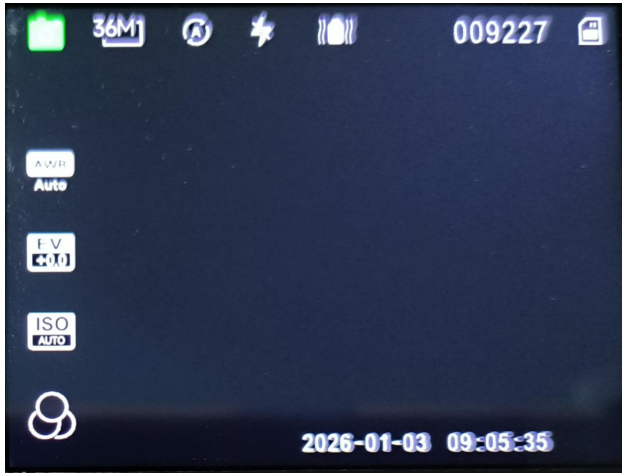

1. Press the Mode button to switch to Photo Mode. When the 【 】icon appears in the upper left corner of the screen, it indicates that the camera is in Photo Mode.
2. Half-press the shooting button to focus. The focus frame on the screen will turn green.
3. Fully press the shooting button to take the photo.
4. In low-light conditions, turn on the camera's fill light. Press the Left button to select a flash mode.

Photo Mode screen icon

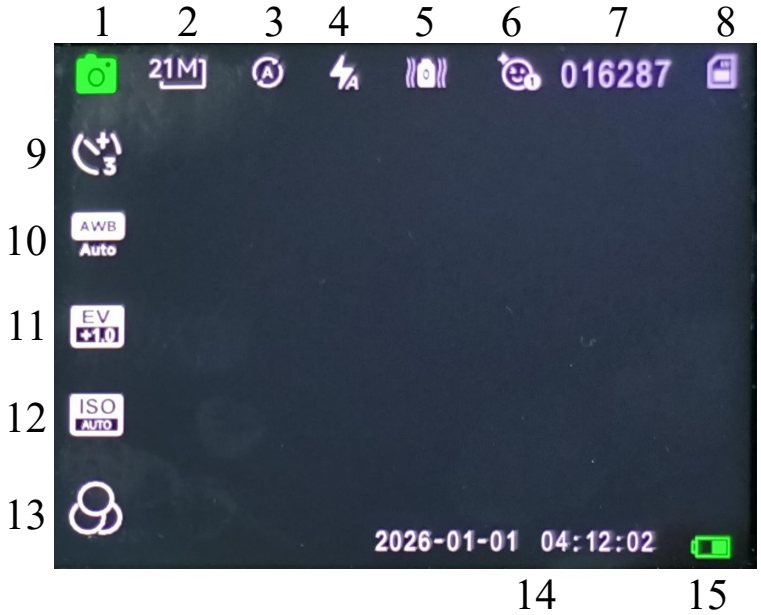

No.	Icon name	Description
1	Shooting Mode	Photography mode icon
2	Photo Size	Current photo resolution setting
3	Scene	Select the corresponding scene, and the camera will automatically match the more suitable settings
4	Flash mode	Press the left flash button to switch between flash

		modes:Turn off flash/ Auto flash/ Force flash.
5	Anti-Shake	Prevent camera shake from affecting image clarity
6	Beauty	It can beautify portraits
7	Number of photos that can be taken	The number of photos that can be taken with the current camera memory
8	Memory card	Is the storage card installed
9	Capture Mode	Single Shot/ Self-timer (3s)/ Self-timer(5s) Self-timer (10s)/ Continuous Shooting (3 shots) Continuous Shooting (6 shots) Continuous Shooting (12 shots)
10	White Balance	Current white balance setting
11	Exposure Compensation	Current exposure compensation value
12	ISO	Current ISO sensitivity setting
13	Filter	Apply unique color, tonal, and style effects directly to photos or videos during capture, enabling the creation of creative and textured works.
14	Time&Date	Timestamp
15	Battery status	The battery is charging or the battery level.

Video mode

Shoot video

1. Press the Mode button to switch to Video Mode. An icon 【 】 will appear in the upper left corner of the screen, indicating that the camera is now in video recording mode.

2. Half-press the shooting button to focus. The focus frame on the screen will turn green once the focus is achieved.

3. Fully press the shooting button to start recording. Press it again to stop recording.

4. In low-light conditions, turn on the camera's fill light. Press the Left button to select the desired fill light mode.

Video Mode screen icon

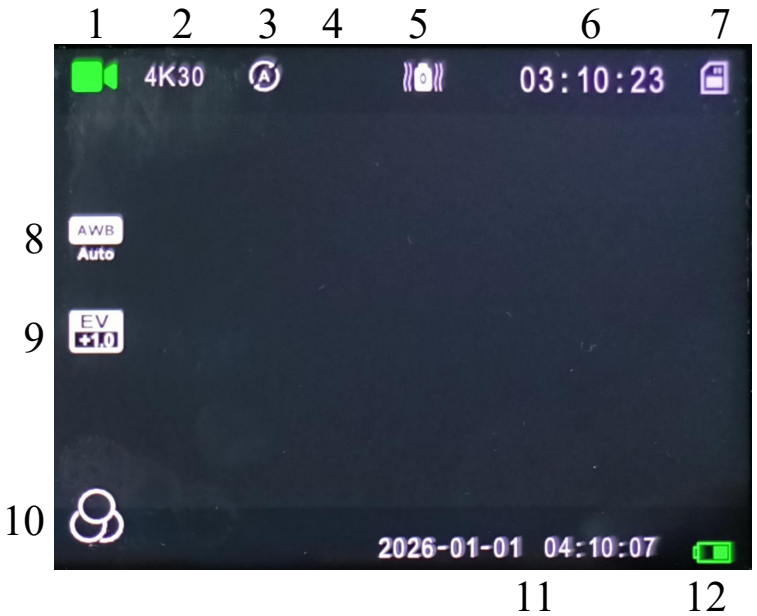

No.	Icon name	Description
1	Shooting Mode	Video recording mode icon
2	Photo Size	Current photo resolution setting
3	Scene	Select the corresponding scene, and the camera will automatically match the more suitable settings

4	Fill Light Mode	Press the Left button to switch between fill light modes:Turn off fill light/ Turn on fill light
5	Anti-Shake	Prevent camera shake from affecting image clarity
6	Video recording time	Remaining recording time in the camera's current memory
7	Memory card	Is the storage card installed
8	White Balance	Current white balance setting
9	Exposure Compensation	Current exposure compensation value
10	Filter	Apply unique color, tonal, and style effects directly to photos or videos during capture, enabling the creation of creative and textured works.
11	Time&Date	Timestamp
12	Battery status	The battery is charging or the battery level.

Playback and Deleting Photos/Videos

1. In photo/video mode, press the Right button to enter the camera’s Playback Mode.
2. In playback mode, press the Left button or Right button to browse through the photos or videos.
3. To delete the currently viewed photo or video, press the Menu button to open the playback settings. Locate the "Delete" option, where you can choose to delete the current file or delete all files.
4. Within the playback settings, press the Menu button to exit the settings menu.
5. After browsing, press the Mode button to exit Playback Mode and return to the shooting mode.

Selfie Mode

1. Switching to Selfie Mode & Taking Photos/Videos

On the preview screen, press the Camera Switch Button to switch to the front camera and activate selfie mode. Press the shutter button to capture a photo or start/stop recording a video.

2. Switching Back to the Main Camera

Press the Camera Switch Button again to switch back to the main camera.

3. Optimal Shooting Distance

The recommended shooting distance for the front camera is 50–120 cm to ensure image clarity.

Important Notes:

Single-Lens Mode: The camera supports only one active lens at a time—either the main camera or the front camera.

Focusing Tip: The front camera uses a fixed focus design (no autofocus function). Therefore, a green focus frame and focus confirmation tone will not appear when using the front camera. Adjust your distance flexibly based on the previewed image to ensure a clear picture

Download Still Image/ Video Files to Computer

1）When the camera is turned on, use the USB cable (in the package) to connect the computer.

2）When the connection is completed, the camera screen displays a dialog box accordingly.

3）Please select MSDC，and then you can download the files from the camera to your Computer.

4）After downloading, please remove the USB cable and the camera is exiting the MSDC mode.

How to Use Camera As Webcam

Please use the USB cable (in the package) to connect the computer.

1）When the connection is completed, the camera screen displays a dialog box accordingly.

2）Please select PC camera and then you can use the camera as the webcam on the computer.

3）After using, please remove the USB cable and the camera will exit webcam mode.

Specifications

Image resolution	96M; 64M; 48M; 36M; 21M; 14M; 12M etc.
Video resolution	5K 30FPS; 4K 30FPS; 2.7K 60FPS; 2.7K 30FPS; FHD 60FPS; FHD 30FPS; HD60FPS; HD30FPS etc.
Memory card	Support Micro SD card（Maximum1TB） and SDHC Class 6
File format	JPG, MP4(H.264 codec)
Aperture / Focal length	Ff(F=1.8 ; f=4.69mm)
Digital zoom	8X
Shooting distance	Main lens: 18 cm to infinity; Selfie lens: 50-120 cm
Display screen	2.8-inch , 640*480 IPS , 4:3 aspect ratio

Power	1050mA/h 3.7V ,Rechargeable Lithium-ion battery
USB Port	Type-C
working hours	4K recording ≤60 minutes, photo taking ≤100 minutes
Waterproof	5 meters
Dustproof	IP6X
PC system	Win7/Win8/Win10/Win 11

Attention: Product specification is the latest information at the time when this use manual is made. No further notice will be made for any variation. Specific operating methods are subject to the real camera that you purchased.

Frequent asked questions

The camera cannot be started after installing the battery	Insufficient battery power, please replace the new battery.
	Battery pack is not removed.
	The battery is inverted or not in place, please confirm that the battery is installed correctly.
Press the shutter button to take photos and video	The memory card is full, please store the shooting files to another memory.
The picture is blurred	The hand shakes when taking pictures.Please hold the camera with both hands, or use other objects such as a tripod to stabilize the body. Do not shake the camera when taking pictures.
The photo or video is dim	The shooting environment is not light.Please shoot in well lit places or use light to increase brightness.

The camera is automatically turned off	Insufficient battery power, please replace the battery.
	For save power, the camera will be automatically closed without any operation for more than 1 minute (3 or 5 minutes, depending on the settings).
Camera crash or screen blurred	The Micro SD card formatting the Micro SD card in the camera or computer before using.

No.WDC902 5K 260522

RoHS

This device complies with part 15 of the FCC Rules. Operation is subject to the following two conditions: (1) this device may not cause harmful interference, and

(2) This device must accept any interference received, including interference that may cause undesired operation.

Changes or modifications not expressly approved by the party responsible for compliance could void the user's authority to operate the equipment. This equipment has been tested and found to comply with the limits for a Class B digital device, pursuant to Part 15 of the FCC Rules. These limits are designed to provide reasonable protection against harmful interference in a residential installation. This equipment generates uses and can radiate radio frequency energy and, if not installed and used in accordance with the instructions, may cause harmful interference to radio communications. However, there is no guarantee that interference will not occur in a particular installation. If this equipment does cause harmful interference to radio or television reception, which can be determined by turning the equipment off and on, the user is encouraged to try to correct the interference by one or more of the following measures:

- - Reorient or relocate the receiving antenna.

- - Increase the separation between the equipment and receiver.

- - Connect the equipment into an outlet on a circuit different from that to which the receiver is connected.

- - Consult the dealer or an experienced radio/TV technician for help.ct.

*RF warning for Portable device:

The device has been evaluated to meet general RF exposure requirement.

The device can be used in portable exposure condition without restriction.